United States Army Alaska
Northern Warfare Training Center

Cold Weather (CWLC, CWOC & ALIT)
Student Handout

Winter 2009-2010

"Battle Cold and Conquer Mountains"

Edition 09 November 2009

Table of Contents

	Subject Area	Page Number
Lesson #	**Lesson Title**	
699-8010	***Cold Regions Terrain Analysis***	***1***
699-8011	***Cold Regions Weather Analysis***	***21***
699-8013	***Cold Weather Injury Prevention and Treatment***	***53***
699-8015	***Cold Weather and Mountain Environmental Injury Prevention and Treatment***	***93***
699-8014	***Altitude Illness Prevention and Treatment***	***102***
699-8017	***Cold Weather Risk Management***	***108***
699-8012	***Planning Considerations for Over Snow Movement***	***115***
699-8019	***Snowshoeing***	***136***
699-8022	***Sled (ahkio) Hauling***	***144***
699-8025	***Tent and Stove Drill***	***150***
699-8026	***H-45 Stove***	***180***
699-8027	***Improvised Shelters***	***196***
699-8028	***Cold Regions Patrol Base Considerations***	***207***
699-8031	***Cold Weather Vehicle Maintenance***	***227***
699-8032	***Weapons Maintenance in Cold Weather***	***240***
699-8020	***Military Skiing***	***252***
699-8018	***The Avalanche Hazard***	***282***
699-8024	***Individual Camouflage in a Snow Covered Environment***	***329***
699-8030	***Cold Weather Firing Techniques***	***337***
699-8029	***Fighting Positions for Frozen Ground***	***346***
699-8023	***Skijor***	***359***
Appendix A	***Cold Weather and Mountain Equipment Information***	***363***

SECTION II. INTRODUCTION

Motivator (Slide 1) You must understand the significant impact that the terrain in cold regions can have on military operations in winter months and the significant impact that this terrain can have on your ability to maneuver throughout the year. Your ability to assess the terrain and make decisions about routes and hazards can mean the difference between a successful operation and one in which you never even make the objective.

Terminal Learning Objective (Slide 2)

ACTION	Analyze terrain in cold regions
CONDITION	Given a specified route or location on the ground or on a map in a cold region, and a map sheet of the route/location.
STANDARD	Analyze the route or location in terms of the five military aspects of terrain and determine how each aspect affects the mission/training.

Safety Requirements: For classroom training discuss emergency procedures in case of fire or natural disaster.

Risk Assessment: Low for classroom instruction.

Environmental Considerations: None

Evaluation: You will be tested on your knowledge of cold regions during a one hour written examination at the conclusion of the course (Refer to training schedule for date/time of exam). You must score a 70% on the written exam. If you fail the written exam, you will be given a second exam after re-training has been conducted. If you fail this second examination you will be dismissed from the course.

Instructional Lead-In (Slide 3) This block of instruction provides you with the tools to conduct terrain analysis of cold regions.

SECTION III. PRESENTATION

Learning Step/Activity 1 – Define the acronym OAKOC.

a. (Slide 4) You can use the acronym OAKOC (observation and fields of fire, avenues of approach, key terrain, obstacles, cover and concealment to help analyze terrain.) This analysis allows you to identify potential movement routes, patrol base or assembly area locations, possible enemy avenues of approach and any potential hazards in the area of operations. You can use a map or aerial photographs to initially analyze the terrain and confirm this during a reconnaissance of the area.

(1) Observation and Fields of Fire.

(a) Observation requires terrain that permits a force to locate the enemy, either visually or through surveillance devices. The best observation is obtained from the highest terrain features in an area. Analyze the effects of visibility on observation with weather rather than terrain, because visibility varies with weather, whereas observation varies with terrain.

(b) Fire encompasses the influence of the terrain on the effectiveness of direct and indirect fire weapons. Indirect fire is mainly affected by terrain conditions within the target area. Fields of fire for direct weapons are mainly affected by terrain conditions between the weapon and target.

(c) Identify the terrain features in and by the area of operations (AO) that gives the friendly or enemy force favorable observation and fire. Consider these terrain features in your subsequent analysis of key terrain, enemy forces, and cover and concealment.

(2) Avenues of approach.

(a) An avenue of approach is a route for a force of a particular size to reach an objective or key terrain. To be an avenue of approach, a route must be wide enough to deploy the size force that will be using it.

(b) Analyze an avenue of approach solely on the following terrain considerations:

(1) Observation and fire. Determine if the avenue of approach provides favorable observation and fire for the force moving on it.
(2) Concealment and cover. Determine if the avenue of approach provides cover and concealment. Both can conflict with observation and fire.
(3) Obstacles. Determine if the avenue of approach avoids obstacles that are perpendicular to the direction of advance and, when practical, that takes advantage of those that are parallel to the direction of advance.
(4) Use of key terrain.
(5) Adequate maneuver space.
(6) Ease of movement.

(3) Key Terrain. A key terrain feature is any point or area that seizure or control affords a marked advantage to either force. “Seizure” means physical occupation of the terrain by a force whereas “control” might or might not include physical occupation. The selection of key terrain varies with the level of command, the type of unit and the unit’s mission.

(4) Obstacles.

(a) An obstacle is any natural or artificial terrain feature that stops or impedes military movement.

(b) The mission influences consideration of obstacles.

(c) An obstacle might be an advantage or disadvantage. Consider each on its own merits, and for each specific mission. For example, obstacles perpendicular to a direction of attack favor the defender because they slow or channelize the attacker. Obstacles parallel to the direction of attack can help protect the flank of the attacking force.

(5) Cover and concealment.

(a) Cover is protection from the effects of fire. Concealment is protection from observation. You must determine cover and concealment available to both friendly and enemy forces.

(b) Concealment might be provided by terrain features, vegetation (such as wood, underbrush, or cultivated vegetation), or any other feature that denies observation. Concealment does not necessarily provide cover.

b. Cold regions have peculiar terrain features that can affect military operations. We must understand these features before we can effectively analyze terrain in cold regions.

Terrain Analysis: OAKOC

- ***Observation and Fields of Fire***
- ***Avenues of Approach***
- ***Key Terrain***
- ***Obstacles***
- ***Cover and Concealment***

Learning Step/Activity 2 – Define cold regions.

a. (Slide 5) About one quarter of the Earth's land mass may be termed severely cold. This is indicated by the area above line A in the Northern hemisphere and below line A in the Southern Hemisphere. Mean annual air temperatures are below freezing, maximum snow depths exceed 60 cm and lakes and rivers are ice covered for more than 180 days each year. Another quarter of the Earth is termed moderately cold (including most of the United States and Eurasia) where mean temperatures during the coldest month are below freezing.

b. Many methods have been used to define the limits of cold weather areas. The description I just provided is one used by research scientists at the Cold Regions Research and Environmental Laboratories (CREEL). **For military purposes, cold regions are defined as any region where cold temperatures and snowfall have a significant effect on military operations for one month or more each year.**

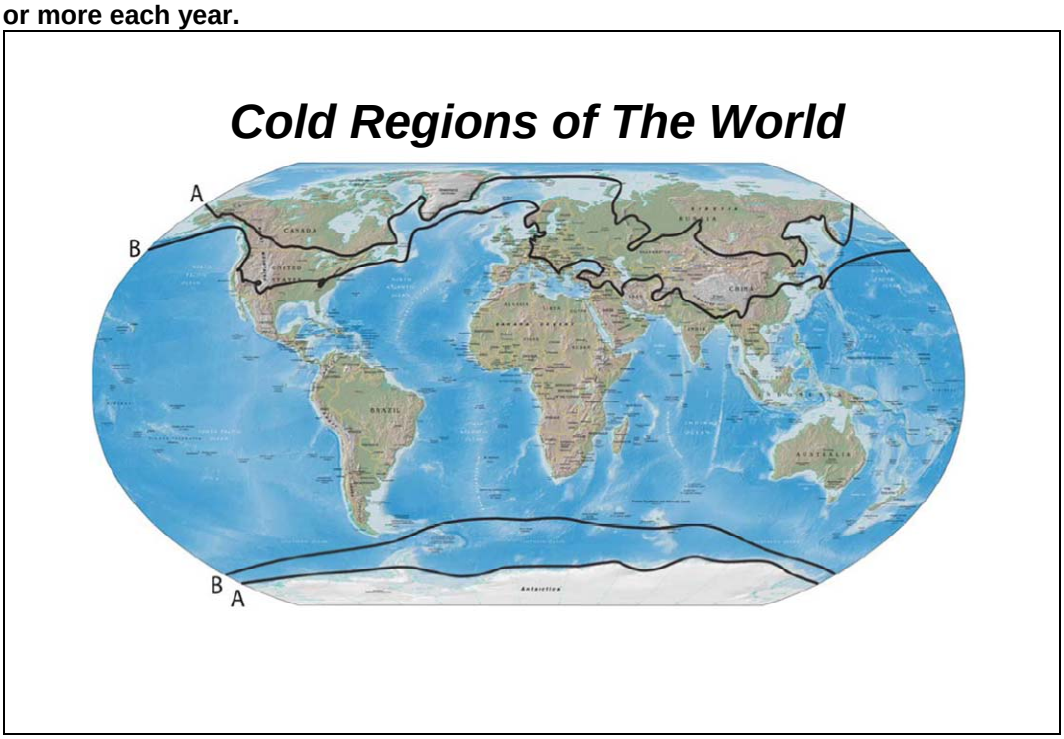

Learning Step/Activity 3 – Describe the terrain and weather characteristics of the arctic, sub-arctic and temperate sub-regions.

a. (Slide 6) Cold regions are present in both the Northern and Southern Hemispheres. The Southern Hemisphere includes Antarctica, Patagonia and the Andes. In the Northern Hemisphere, cold regions are broken down into three sub-regions – **temperate, sub-arctic and arctic**. These sub-regions are military simplifications of biomes (a classification system that is based on latitude and climate that is commonly recognizable on a global scale), that include arctic, sub-arctic, and temperate cold biomes. The **Arctic Circle** is an arbitrary line located at 66 º 33' N latitude that defines the southernmost portion of the arctic sub-region.

b. Mountains can be found in all three sub-regions and can significantly complicate operations in cold regions. All mountains and mountainous regions that receive a predictable amount of snowfall should be treated as a cold region.

Cold Regions of The World

Arctic

Sub-Arctic

Temperate

Mountainous

c. (Slide 7) In winter, the **arctic** is a cold dry climate, with sparse snow cover that lasts up to nine months each year. The arctic is characterized by vast treeless areas, few roads or urban areas, and extensive bog areas, lakes and rivers. During the midwinter months, the sun never rises; in the summer months there are 24 hours of daylight. Sustained high winds and blowing snow are common. Winter temperature range is -19º to -26º F with a record low of -54º F. Summer temperature range is 44º-51º F with a record high of 79º F. Summers experience cold-wet conditions.

Arctic

Cold winds / little moisture

Dry climate

Extremely high winds not uncommon

Summer temperature range of 44-51ºF; record high of 79ºF

Winter temperature range of -19 - -26ºF; record low of -54ºF

Snow cover 9 months per year

d. (Slide 8) A typical view of the Arctic region in late winter/early spring. Note the single lane road and rolling terrain with no visible vegetation. Also note that the snow pack does not appear to be very deep.

e. (Slide 9) The sub-arctic is the area south of the Arctic Circle typically characterized by dense boreal forests, limited road networks and urban areas and extensive bog area, lakes and river networks. Winter temperature ranges are from -15º F to -19º F, with a record low of -81º F (Snag, Yukon Territory). Low winter temperatures are affected by the lack of sunlight with only four hours of sun on the shortest day. Snow cover exists for at least 6 months in the lowlands; surrounding mountains can have perennial snow cover. Summer temperatures range from 66º-73º F with a record high of 96º F. Strong winds are common.

Sub-arctic

Strong winds

Summer temperature range of 66-73ºF; record high of 96ºF

Winter temperature range of -15 - -19ºF; record low of -81ºF

Snow cover 6-8 months per year

f. (Slide 10) This is an area just South of the Black Rapids Training Site (sub-arctic). This photo is also taken in late winter. Note the mountainous terrain in the background, the dense spruce forests and deeper snow pack.

g. (Slide 11) The temperate sub-region varies greatly and includes maritime and continental zones, heavily forested areas, mountain ranges, deserts and plains areas. The effects of cold on military operations in this region are generally short term, but these effects can be catastrophic for unprepared units.

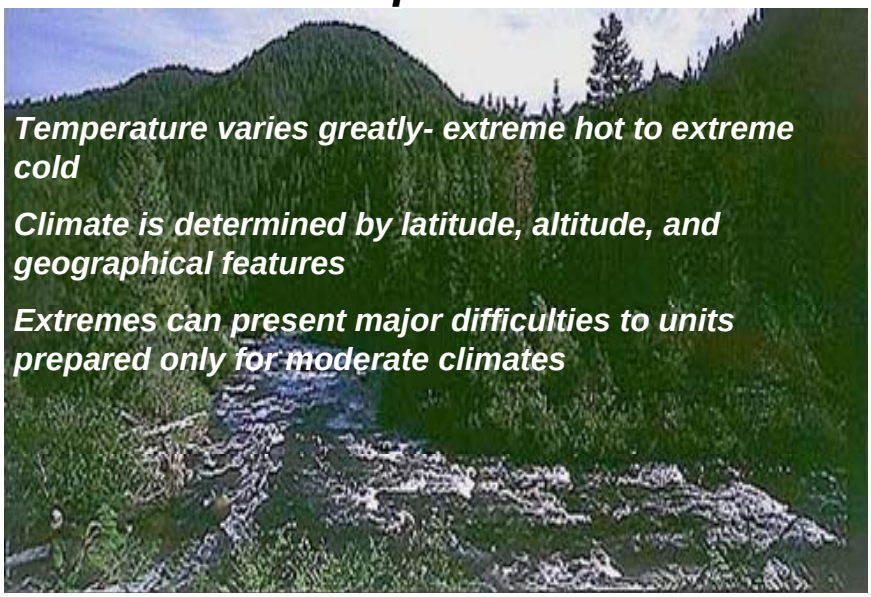

h. (Slide 12) Mountains can be found in all three sub-regions and can significantly complicate operations in cold regions. All mountains and mountainous regions that receive a predictable amount of snowfall should be treated as a cold region. Mountains are obstacles to transportation and communication. Delays to re-supply operations or casualty evacuation are common due to frequent bad weather. Small unit operations are more effective, however, they need to be more self-sufficient due to the difficulty of re-supply, casualty evacuation etc.

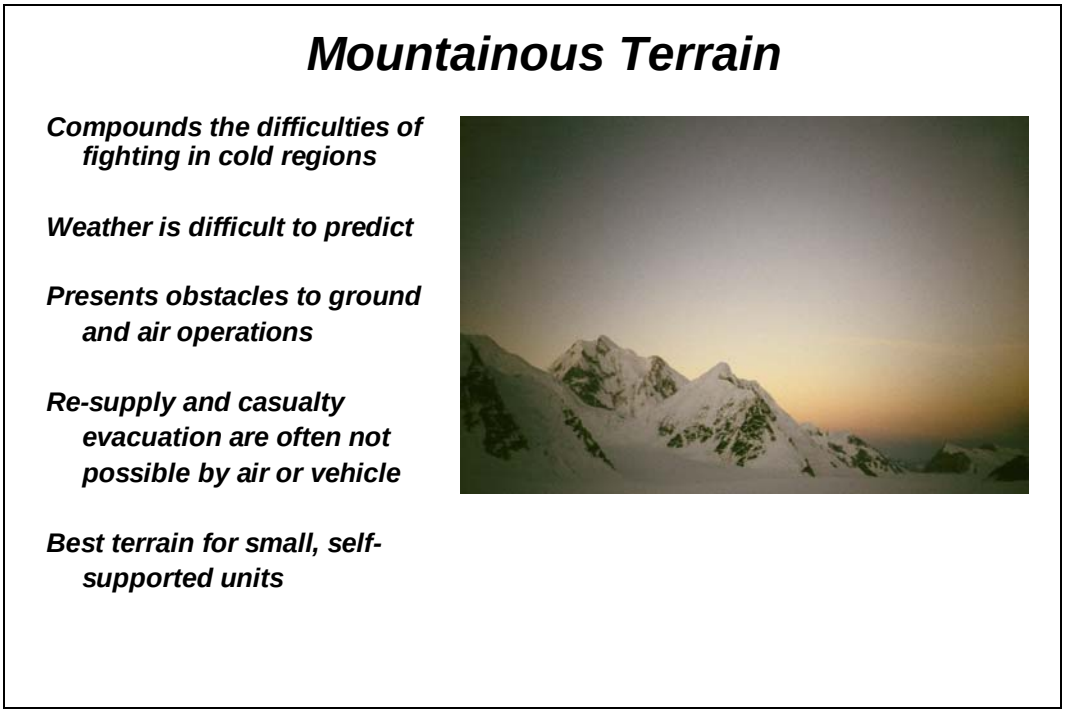

i. (Slide 13) The arctic and sub-arctic have unique terrain characteristics that can significantly impact military operations.

Terrain Characteristics

Boreal Forests

Tundra

Permafrost

Muskeg

Glaciers and Ice Caps

Rivers

j. (Slide 14) Thick **boreal forests**, also known as **Taiga**, are vast areas in which evergreen spruce and firs are the dominant plant life; it is also the northernmost area where trees can exist. Boreal forests exist in both the arctic and sub-arctic. The extent of these forests diminishes the further one moves north. Also, the tree line (with respect to elevation) is generally very low and transitions to treeless areas can occur at elevations as low as 2,000 feet. Treeless areas are generally characterized as tundra.

Boreal Forests

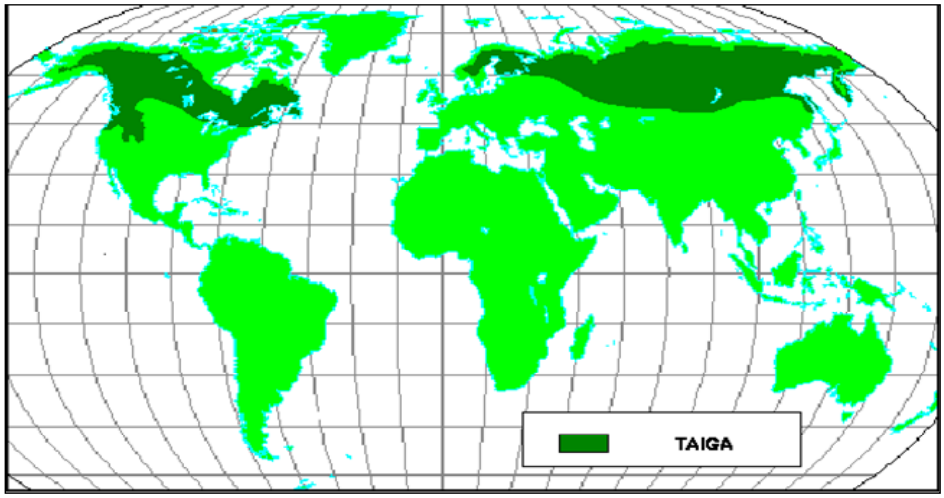

k. (Slide 15) **Tundra** is an area where tree growth is hindered due to low temperatures and a short growing season. Tundra is the norm in the arctic. It covers much of the arctic region in lieu of forests. In the sub-arctic it exists where the elevation increases. Tundra is made up of various grasses and mosses. Vegetation often develops into clumps with standing pools of water between them –these are known as **tussocks** and make mounted and dismounted movement extremely difficult during the summer and during freeze thaw periods. The tundra has been known to swallow vehicles as they sink into the swampy ground. Movement is easier in the winter when the ground is frozen. Even with the frozen ground of winter, vehicular movement is generally restricted to roads; movement on tundra can quickly turn into a vehicle recovery operation. Drainage in these areas is typically poor due to the permanently frozen ground that exists under the tundra – this is known as **permafrost.**

Tundra

Common in Arctic

Normally covered in tussocks

Difficult to move through in summer

l. (Slide 16)

Tundra

m. (Slide 17)

Tundra

n. (Slide 18) Permafrost is permanently frozen ground that occurs when the ground temperature is 32°F or colder for 2 or more years. It is continuous in the Arctic, discontinuous in the sub-arctic, and non-existent in the temperate region.

Permafrost

Permanently frozen ground

Ground temperature 32°F or less for 2 or more years

Continuous in the Arctic

Discontinuous in Subarctic and further south

Temperate regions free from permafrost

o. (Slide 19) The thickness of permafrost varies from of few feet to over a thousand feet in depth. Tundra prevents the thawing of permafrost. In areas where permafrost is present fighting positions will have to be built above ground unless engineer support is available. The frozen ground prevents the draining of water, contributing to the formation of **muskeg.**

Permafrost

(cont.)

Thickness varies from a few feet to over 1000 feet

Tundra keeps permafrost from thawing

Frozen ground prevents drainage

Fighting positions difficult to dig

p. (Slide 20) **Muskeg** is a type of bog or wetland found in poorly drained areas underlain with permafrost. Muskeg develops in areas with abundant rainfall and cool summers. Trapped by underlying permafrost, water moves little or not at all. Acid from slowly rotting plants accumulates in stagnant water and lowers soil pH. Black spruce (mainly in the sub-arctic), sphagnum moss, and sedges thrive in this cold, wet, acidic soil. Sedges replace grasses which prefer warmer, dryer conditions. The ground is usually soft and spongy or it can be a vast shallow swamp.
Again movement is difficult in the summer but gets easier in the winter when the ground is frozen. These areas are often difficult to detect in early or late winter when the ground is only partially frozen, and can become traps for vehicles that attempt to move through them.

Muskeg

Ground soft and spongy

Many standing pools of water

Very difficult to drive through in summer

q. (Slide 21-23) This helicopter landed on what looked like a trail. It was a muskeg swamp used in winter as a trail. Temperatures were below freezing, but as it was early winter the ground was not frozen completely. The helicopter sunk into the muskeg and became stuck. Temperatures dropped overnight and the helicopter froze into the muskeg. It took significant effort to free the stuck helicopter.

A crane was used to hoist the helicopter out after chainsaws were used to cut the frozen muskeg and ice around the helicopter.

Muskeg

This is a Stryker stuck in muskeg.

Muskeg

r. (Slide 24) Glaciers are rivers of ice and snow that develop by the perennial accumulation of snow in a valley or draw. The accumulated snow turns to ice through compression forces over time. The flow or movement of glaciers is caused by gravity; they glide over a layer of melt-water between the underside of the glacier and the underlying surface of the earth. Glaciers and polar icecaps cover 10% of the earth's surface. Alaska contains 2% of the total glaciers and glaciers are typically found in mountainous regions of the sub-arctic and temperate areas. Glaciers are the highway into the mountains, normally being easier and safer to negotiate than the surrounding ridges and peaks however specialized training and equipment is required to safely negotiate glaciers.

Glaciers and Ice Caps

Covers 10% of Earth's surface

Alaska has 2% of the Earth's glaciers

Often the easiest and safest means of travel in the mountains, but specialized training is required for negotiating

s. (Slide 25) The Kahiltna and surrounding glaciers.

Glaciers and Ice Caps

t. (Slide 26) Rivers found in cold regions may aid movements or be major obstacles, depending upon the time of year. Arctic/Sub-Arctic rivers are usually glacier-fed, with many braided channels and swift currents. Glacier-fed rivers change course frequently, making river navigation difficult, and rendering map data suspect. If shallow-draught boats are available, rivers may provide valuable lines of communication in summer, and once firmly frozen, may offer high-speed routes for both mounted and dismounted movement. During spring and early winter (break-up and freeze-up) however, rivers may be impassable. Some rivers, especially in temperate areas, may not freeze solidly enough to allow for winter movement.

Rivers

Majority of Arctic and Sub-Arctic rivers are glacier fed

Good transportation routes after freeze up

u. (Slide 27)

Rivers

v. (Slide 28)

Rivers

w. (Slide 29) Overflow ice occurs where a layer of ice ruptures and water underneath it flows up through the surface. Two conditions must exist for overflow to occur. First temperatures must be below freezing. As a water source freezes it does so from the top down. If the water under the layer of ice is under pressure (for example where a spring continues to flow into the area), it can force its way through ice and flow on top of it. This can occur throughout the winter, despite extremely cold temperatures. It can re-freeze and rupture many times creating layer upon layer of ice. This can create a significant obstacle along roadways. Snow can also mask the presence of overflow and create a significant hazard; You may be moving along and suddenly find yourself immersed in water creating a potentially life or limb threatening condition.

Overflow Ice

- ***Can form at any water source when two conditions are met:***
  - ***Temperatures are below freezing***
  - ***Water underneath a frozen layer of ice is under pressure***
- ***Can build many layers creating obstacles along roads***
- ***Can create conditions where water continues to flow despite the temperature which creates a significant obstacle and hazard to dismounted movement***

SECTION IV. SUMMARY

(Slide 30) Your ability to analyze the terrain will help you to plan an effective mission and manage risk in the cold weather environment. You now have a basic understanding of some of the hazards and terrain peculiarities in cold regions; this knowledge will be important to you in later lessons as you learn to move, shoot and communicate in the cold weather environment.

Check on Learning.

1. In the arctic and sub-arctic, what obstacles are typically present?

Muskeg, tundra, permafrost, glaciers swift, glacial fed rivers, deep snow pack.

2. What Cover and Concealment/Observation Fields of Fire possibilities exist in the arctic and sub-arctic?

In the arctic, tundra offers little cover or concealment. Intravisibility lines (IV lines), and drainages may be the only cover or concealment available. Arctic and sub-arctic areas of boreal forest can offer excellent concealment possibilities and average cover depending upon the types of trees present.
Observation and field of fire is typically excellent in the arctic except where boreal forests exist. To achieve good observation/fields of fire in boreal forests, it may be necessary to gain high ground.

3. What is considered key terrain in the arctic and sub-arctic?

Because road networks are sparse these are often considered key terrain. Population centers are also key terrain as they offer shelter which is essential to successful operations especially in winter months.

4. What avenues of approach exist in the arctic and sub-arctic?

Roads are often limited or non-existent in cold regions. Rivers can provide excellent travel routes in summer months if units are equipped with shallow draught boats and excellent routes in winter after ice conditions are safe for travel.

SECTION II. INTRODUCTION

Motivator ***(Slide 31) "Climate is a dynamic force (in the Russian expanse); the key to successful military operations. He who recognizes and respects this force can overcome it; he who disregards or underestimates it is threatened with failure or destruction. In 1941 the Wehrmacht did not recognize this force and was not prepared to withstand its effects. Crisis upon crisis and unnecessary suffering were the result. Only the ability of German soldiers to bear up under misfortune prevented disaster. But the German Army never recovered from the first hard blow."***

Former German Army Group Commander, Eastern Front WWII

Terminal Learning Objective (Slide 32)

ACTION	Analyze weather of cold regions
CONDITION	Given a training mission that involves a specified route or location on the ground or a map in a cold region, a map sheet of the route/location, a current weather forecast for the general area, altimeter and/or barometer (if available) and any other pertinent weather information or data.
STANDARD	Analyze the weather for the route/location in terms of visibility, survivability and mobility and determine how each of these aspects affects the training/mission.

Instructional Lead-In. You probably already know that weather can have a large impact on military operations. You probably all have a story of a time when you were promised an air movement back from a long field problem, but had to walk back instead because the of weather. Weather information can be hard to come by in cold regions. Observatories may make generalized forecasts for large unpopulated areas that may or may not be accurate. A call for moderate weather conditions in the forecast may not be relevant to your particular area of operations and you can quickly find yourself overwhelmed by the local conditions. Your ability to make observations and predict the weather can help you to prepare your Soldiers for the worst.

Safety Requirements: For classroom training discuss emergency procedures in case of fire or natural disaster.

Risk Assessment: Low for classroom instruction.

Environmental Considerations: None

Evaluation: You will be tested on your knowledge of weather during a one hour written examination at the conclusion of the course (Refer to training schedule for date/time of exam). You must score a 70% on the written exam. If you fail the written exam, you will be given a second exam after re-training has been conducted. If you fail this second examination, you will be dismissed from the course.

SECTION III. PRESENTATION

Learning Step/Activity 1 – Describe how weather is created.

a. (Slide 33) Weather Basics: The earth is surrounded by an atmosphere that is divided into several layers. The earth's weather systems are in the lower of these layers known as the troposphere. This layer reaches as high as 40,000 feet. The forces that create the weather are:

(1) Sun
(2) Air Movement
(3) Earth's Rotation
(4) Ocean's and Land Masses
(5) Fronts

Forces that create weather:

Sun, air movement, earth's rotation, oceans and land masses, cold fronts and warm fronts

Weather depends upon:

Air temperature, humidity, air pressure, how air is being moved and if the air is being lifted or not

You should observe:

Clouds, air pressure, wind direction/speed, temperature and humidity to help predict weather

Some tools that you can use are thermometer, barometer/altimeter and wind meter.

b. **The Sun** (Slide 34) is the major force behind the weather. The sun provides the heat that creates the temperature variations that are ultimately responsible for all weather. The sun does not heat the earth evenly. At the equator it heats the earth's surface with greater intensity than it does at the poles. This uneven heating results in air movement.

The Sun

- ***is the major force behind the weather***
- ***does not heat the earth evenly; at the equator it heats the earth's surface with greater intensity than it does at the poles***
- ***uneven heating results in air movement; temperature variations are ultimately responsible for all weather***

c. **Air Movement.** (Slide 35) You are all familiar with wind. But you must also understand vertical movement of air. As air is heated it becomes less dense (lighter) and rises. As air is cooled, it becomes denser (heavier) and sinks. These temperature differences equate to air pressure differences. There are some basic facts about air pressure that you should be familiar with:

(1) Air pressure is the weight of the atmosphere at any given place.

(2) The average air pressure at sea level is 29.92 inches of mercury (hg) or 1,013 milibars (mb).

(3) Air that is cooled is dense (heavier) air – therefore the air pressure is high. High pressure areas have the following characteristics:

- The airflow is clockwise and out
- Otherwise known as an anticyclone
- Associated with clear skies
- Generally the winds will be mild
- Depicted as a blue H on weather maps

(4) Air that is heated is less dense and rises – therefore the air pressure is low. Low pressure areas have the following characteristics:

- The airflow is counterclockwise and in
- Otherwise known as cyclone
- Associated with bad weather
- Depicted as a red L on weather maps

(5) Pressure differences cause air to move from a high pressure area to a low pressure area which creates wind. Just think of the air compressor you use to inflate your tires – air under high pressure moves into your tires that have a lower air pressure. Air from a high pressure area is basically trying to

flow out and equalize its pressure with the surrounding air. Low pressure on the other hand, is building up vertically by pulling air in from outside itself.

(6) As air moves from high pressure areas to low pressure areas it carries moisture with it. In the low pressure areas, the air rises up. As this air rises up, it is cooled. As air cools, its capacity to hold water is reduced. Clouds are formed, and precipitation often follows. The opposite effect happens at the poles. Polar air sinks and as it does so it creates high pressure areas of very cold air. As it sinks it actually warms. This warming evaporates any moisture present. This is the reason that the arctic receives very little precipitation. This warming is a relative thing and does little to warm the overall climate of the Arctic.

(7) The higher in altitude you go, the lower the air pressure will be.

Air Movement

- ***Air pressure is the weight of the atmosphere at any given place.***

- ***Air that is cooled, sinks and is dense (heavier) air – therefore the air pressure is high.***

- ***Air that is heated is less dense and rises – therefore the air pressure is low.***

- ***The higher in altitude you go, the lower the air pressure will be.***

d. **The Earth's Rotation.** (Slide 36) If the earth was stationary, air masses would move from the poles to the equator and back to the poles as it was heated and cooled. But the earth rotates. The rotation of the earth deflects the air masses influencing wind movement. Much of the world's weather depends upon a system of winds that blow in a set direction.

(1) In the Northern Hemisphere, there are three prevailing winds:

- **Polar Easterlies**. These are winds from the polar region moving from the east. This is air that has settled at the poles.

- **Prevailing Westerlies**. These winds originate from approximately 30 degrees north latitude from the west. This is an area where prematurely cooled air, due to the earth's rotation, has settled to the surface.

- **Northeast Trade Winds**. These are winds that originate from approximately 30 degrees north from the northeast.

(2) The **jet stream** is a long meandering current of high speed winds often exceeding 250 miles per hour; it is located near the transition zone between the troposphere and the stratosphere known as the tropopause. These winds blow generally from a westerly direction dipping down and picking up air masses from the tropical regions and going north and bringing down air masses from the polar regions.

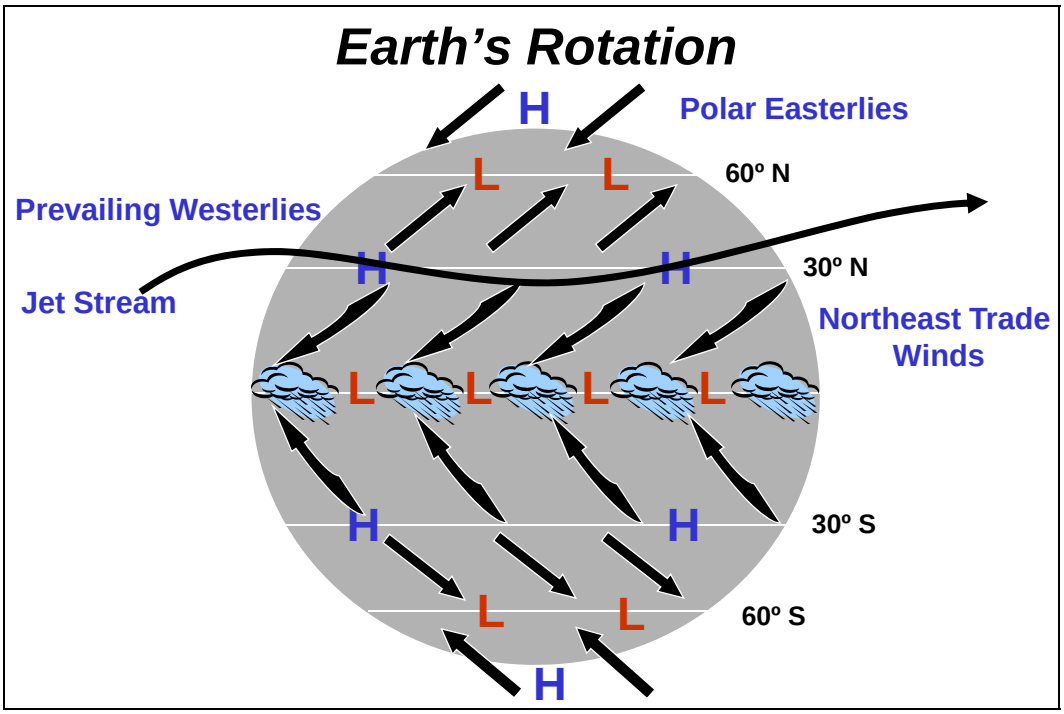

e. **Oceans and land masses**. (Slide 37) The patterns of air mentioned above move air. This air comes in parcels called air masses. These air masses can vary in size from the size of a small town to as large as a country. The air masses are named from where they originate:

(1) Maritime – over water
(2) Continental – over land
(3) Polar – north of 60 degrees north latitude
(4) Tropical – south of 60 degrees north latitude

f. Combining these parcels of air provides the names and descriptions of the four types of air masses:

(1) Continental polar – cold, dry air mass
(2) Maritime polar – cold, wet air mass
(3) Maritime tropical – warm, wet air mass
(4) Continental tropical – warm, dry air mass

g. For general planning purposes, you should consider if the area is influenced by a large land mass or a large body of water.

(1) **A maritime zone** is influenced by a large body of water, be it an ocean or large lake. Typically, maritime zones have cool summers and milder winters with heavy precipitation. Ft. Drum, New York (temperate), Ft Richardson, Alaska (sub-arctic) and Murmansk, Russia (arctic) are considered maritime zones.

(2) **Continental Zones** are inland areas; the climate is influenced by a large land mass. These zones are typically drier, though in mountainous areas there may still be heavy snowfall. Extreme cold winters and warm to hot temperatures in the summer are the norm. Ft. Carson, Colorado (temperate), Ft. Wainwright, Alaska (sub-arctic), and Anaktuvak Pass, Alaska (arctic) are all continental zones.

Oceans and Land Masses

Maritime Zones:
influenced by large bodies of water
moderate to heavy precipitation is typical (deep snow pack)
cool, wet summers and moderate, wet winters
freeze thaw cycles more common in winter

Continental Zones:
inland areas; influenced by large land mass
moderate to light precipitation is typical (shallow snow pack)
hot summers, very cold winters
freeze thaw cycles are rare in winter

h. (Slide 38) Typically, cold regions can be categorized as having cold wet or cold dry conditions during the winter months.

(1) In **cold wet conditions**, you will experience temperatures that are near freezing and freeze thaw cycles throughout the winter. Wet snow, sleet and rain are also common conditions. Temperatures are usually above 14° F. Maritime zones are usually cold-wet.

(2) In **cold dry conditions**, average temperatures are lower than 14° F. The ground usually remains frozen throughout winter, freeze thaw cycles are rare and the snow is dry. Continental zones generally experience cold dry conditions.

Cold Wet vs. Cold Dry Conditions

Cold Wet Conditions:
temperature- ranges from 14°F and above
precipitation- rain, sleet, snow (wet or dry)
ground- muddy, wet slushy snow
frequent freeze / thaw cycle

Cold Dry Conditions:
temperature- ranges from 14°F and below
precipitation- dry snow
ground- frozen throughout winter
freeze / thaw cycles are rare

i. **Fronts**. (Slide 39) Fronts occur when two air masses of different moisture content and temperature meet. One indicator that a front is approaching is the progression of the clouds.

Fronts

Warm Front: warm air mass moves into and over a slower or stationary cold air mass; warm air is less dense and therefore moves up and over the cold air mass

Cold Front: cold air mass overtakes a slower or stationary warm air mass; cold air forces the warm air up

Occluded Front: Combination of warm front and cold front characteristics; occurs frequently over land

Stationary Front: no significant air movement is occurring

j. **Clouds** are indicators of weather conditions. By reading cloud shapes and patterns, you can forecast weather without any extra equipment. Any time air is cooled or lifted beyond its saturation point (100 percent relative humidity), clouds are formed.

(1) Humidity is the amount of moisture in the air. All air holds water vapor even if it cannot be seen. Air can hold only hold so much water vapor; however, the warmer the air, the more moisture it can hold. When the air holds all that it can, the air is saturated or has 100 percent relative humidity.

(2) If air is cooled beyond its saturation point, the air will release its moisture in one form or another (clouds, fog, rain, snow etc.). The temperature at which this happens is called the condensation or dew point. The dew point varies depending upon the amount of water vapor contained in the air and the temperature of the air. If the air contains a great deal of water, dew can occur at temperatures of 68º F, but if the air is dry and does not hold much moisture, dew may not form until the temperature drops to 32 º F or even below freezing in which case you see frost.

k. (Slide 40) The four ways that clouds are formed are:

(1) **Convective Lifting.** This effect happens due to the sun's heat radiating off the earth's surface causing air current (thermals) to rise straight up and lift air to a point of saturation.

(2) **Frontal Lifting.** A front is formed when two air masses of different moisture content and temperature collide. Air masses will not mix, so warmer air is forced aloft over the colder air mass. From there it is cooled and then reaches its saturation point. Frontal lifting creates the majority of precipitation.

(3) **Cyclonic Lifting.** An area of low pressure pulls air into its center from all over in a counterclockwise direction. When this air reaches the center of the low pressure, it has nowhere to go but up. Air continues to lift until it reaches the saturation point.

Cloud Formation

Convective Lifting: ***Sun's heat radiating off the earth's surface causing air currents (thermals) to rise straight up and lift air to point of saturation.***

Frontal Lifting: ***A front is formed when two air masses of different moisture content and temperature collide. Air masses will not mix, so the warmer air will lift until it reaches its saturation point. Produces majority of precipitation.***

Cyclonic Lifting: ***An area of low pressure pulls air into its center from all over in a counterclockwise direction. When air reaches the center of low pressure, it has nowhere to go but up. Air continues to lift until it reaches the saturation point.***

(4) **Orographic Lifting** (Slide 41). This happens when an air mass is pushed up and over a mass of higher ground such as a mountain. Air is cooled due to the adiabatic lapse rate until the air's saturation point is reached.

Cloud Formation ***(cont.)***

***Orographic Lifting*:** **This happens when an air mass is pushed up an over a mass of higher ground such as a mountain. This is typical along coast regions with mountains. As the air mass moves up the mountain range, the moisture is released quickly and typically produces heavy precipitation. This is evident in the Cascade Range of the Pacific Northwest.**

Learning Step/Activity 2 – Explain the significance of different cloud types.

a. (Slide 42) Clouds can be described in many ways. They can be classified by height or appearance, or even by the amount of area covered vertically or horizontally. Clouds are classified into five categories: Low, mid and high level clouds; vertically developed clouds and less common clouds.

Cloud Types

Low Level

Mid Level

High Level

Vertical-Development Clouds

Less Common Clouds

b. (Slide 43) **Low level clouds** (0-6,500 feet) are either cumulus or stratus. Low-level clouds are composed mainly of water droplets since their bases lie below 6,500 feet. When temperatures are cold enough, these clouds may also contain ice particles and snow. Low-level clouds may be identified by their height above nearby surrounding relief of known elevation. Most precipitation originates from low-level clouds because rain or snow usually evaporates before reaching the ground from higher clouds. Low-level clouds usually indicate impending precipitation, especially if the cloud is more than 3,000 feet thick. Clouds that appear dark at their bases are more than 3,000 feet thick.

Low-Level Clouds: ***Either Cumulus or Stratus; mostly composed of water; two of the precipitating low level clouds are Nimbostratus clouds and Stratocumulus clouds***

(1) (Slide 44) **Cumulus clouds** indicate fair weather. These clouds resemble cotton balls.

Cumulus Clouds: Low level; fair weather

(2) (Slide 45) **Stratus clouds** indicate fairly stable weather. These clouds resemble a sheet thrown over the sky.

Stratus Clouds Low level: fair weather light precipitation

(3) (Slide 46) **Nimbostratus clouds** are dark low-level clouds accompanied by light to moderately falling precipitation. The sun or moon is not visible through nimbostratus clouds, which distinguishes them from mid-level altostratus clouds. Because of the fog and falling precipitation commonly found beneath and around nimbostratus clouds, the cloud base is extremely diffuse and difficult to accurately determine.

Nimbostratus Clouds: Low level

(4) (Slide 47) **Stratocumulus clouds** generally appear as a low, lumpy layer of clouds that are sometimes accompanied by weak precipitation. Stratocumulus vary in color from dark gray to light gray and may appear as rounded masses with breaks of clear sky in between. Because the individual elements of stratocumulus are larger than those of the mid level cloud, altocumulus, deciphering between the two cloud types is easier. With your arm extended toward the sky, altocumulus cloud elements are about the size of a thumbnail, while stratocumulus elements are about the size of a fist.

Stratocumulus Clouds: Low level

c. (Slide 48) **Mid-level clouds** (between 6,500 to 20,000 feet) have a prefix of alto. Middle clouds appear less distinct than low clouds because of their height. Alto clouds with sharp edges are warmer because they consist of water droplets. Cold clouds, composed mainly of ice crystals and usually colder than – 30 degrees F, have distinct edges that fade gradually into the surrounding sky. Middle clouds usually indicate fair weather, especially if they are rising over time. Lowering middle clouds indicate potential storms, though usually hours away. There are two types of mid-level clouds, altocumulus and altostratus clouds.

Mid-Level Clouds: ***Middle clouds generally indicate fair weather, especially if they are rising over time. These clouds have the prefix 'alto'. Deteriorating weather is indicated by lowering middle clouds though these storms are usually hours away.***

(1) (Slide 49) **Altocumulus clouds** can appear as parallel bands or rounded masses. Typically a portion of an altocumulus cloud is shaded, a characteristic which makes them distinguishable from high-level cirrocumulus. Altocumulus clouds usually form in advance of a cold front. The presence of altocumulus clouds on a warm humid summer morning is commonly followed by a thunderstorm later in the day. Altocumulus clouds that are scattered, rather than even, often suggest the arrival of high pressure and clear skies. These clouds resemble a fish fillet.

Altocumulus Clouds: Mid level

(2) (Slide 50) **Altostratus clouds** are often confused with the high level cirrostratus clouds. The one distinguishing feature is that a halo is NOT observed around the sun or moon with altostratus. Also, with altostratus the sun or moon is only vaguely visible and appears as if it were shining through frosted glass. These clouds resemble stratus clouds (bed sheets). The main difference is that the sun IS visible through altostratus but not through stratus clouds.

Altostratus Clouds: Mid level

d. (Slide 51) **High level clouds** (more than 20,000 feet above the ground) are usually frozen clouds, indicating air temperatures below -30 degrees Fahrenheit, with a fibrous structure and blurred outlines. The sky is often covered with a thin veil that partly obscures the sun; at night high-level clouds can produce a ring of light around the moon. The arrival of cirrus and cirrostratus clouds indicates moisture aloft and the approach of a traveling storm system. Precipitation is often 24-36 hours away. As the storm approaches the cirrus thickens and lowers, becoming altostratus and eventually stratus. Temperatures warm, humidity rises and winds become southerly or south easterly. The two types of high-level clouds are cirrus and cirrostratus.

High-Level Clouds: ***These clouds are in the upper reaches of the troposphere and indicate moisture aloft and that precipitation is 24-36 hours away. Cirrus and Cirrostratus are the most common. The only indicators of these clouds may be a halo or ring around the moon or sun.***

(1) (Slide 52) **Cirrus clouds** are the most common of high-level clouds. Typically found at altitudes greater than 20,000 feet, cirrus clouds are composed of ice crystals that form when super-cooled water droplets freeze. Cirrus clouds generally occur in fair weather and point in the direction of air movement at their elevation. Cirrus can be observed in a variety of shapes and sizes. They can be nearly straight, shaped like a comma, or seemingly all tangled together. Extensive cirrus clouds are associated with an approaching warm front. These clouds are often referred to as Mare's Tails.

Cirrus Clouds: High level

(2) (Slide 53) **Cirrostratus clouds** are sheet like, high level clouds composed of ice crystals. They are relatively transparent and can cover the entire sky and be up to several thousand feet thick. The sun or moon can be seen through cirrostratus. Sometimes the only indication of cirrostratus clouds is a halo around the sun or the moon. When seen around the sun, this halo is often referred to as a Sun Dog. Cirrostratus clouds tend to thicken as a warm front approaches, signifying an increased production of ice crystals. As a result, the halo gradually disappears and the sun or moon becomes less visible. Precipitation is generally on the way in the next 24-36 hours when these are observed.

Cirrostratus Clouds: High level

e. (Slide 54) **Clouds with vertical development** can grow to heights in excess of 39,000 feet, releasing incredible amounts of energy. The two types of clouds with vertical development are fair weather cumulus and cumulonimbus.

(1) **Fair weather cumulus clouds** have the appearance of floating cotton balls and have a lifetime of 5-40 minutes. Known for their flat bases and distinct outlines, fair weather cumulus exhibit only slight vertical growth, with the cloud tops designating the limit of rising air. Given suitable conditions, however, these clouds can later develop into towering cumulonimbus clouds associated with powerful thunderstorms. Fair weather cumulus clouds are fueled by buoyant bubbles of air known as thermals that rise up from the earth's surface. As the air rises, the water vapor cools and condenses forming water droplets. Young fair weather cumulus clouds have sharply defined edges and bases while the edges of older clouds appear more ragged, an artifact of erosion. Evaporation along the cloud edges cools the surrounding air, making it heavier and producing sinking motion outside the cloud. This downward motion inhibits further convection and growth of additional thermals from down below, which is why fair weather cumulus typically have expanses of clear sky between them. The cloud will begin to erode and eventually disappear without a continued supply of rising air.

(2) **Cumulonimbus clouds** are much larger and more vertically developed than fair weather cumulus. They can exist as individual towers or form a line of towers called a squall line. Fueled by vigorous convective updrafts, the tops of cumulonimbus clouds can reach 39,000 feet or higher. Lower levels of cumulonimbus clouds consist mainly of water droplets, while at higher elevations, where temperatures are well below freezing, ice crystals dominate the composition. Under favorable conditions, harmless fair weather cumulus clouds can quickly develop into large cumulonimbus clouds associated with powerful thunderstorms, known as super-cells. Super-cells are large thunderstorms with deep rotating updrafts and can have a lifetime of several hours. Super-cells produce frequent lightning, large hail, damaging winds and tornadoes. These storms tend to develop during the afternoon and evening when the effects of heating from the sun are strongest.

Vertical Development Cloud Formations

Fair Weather Cumulus: ***resemble floating cotton balls with a short lifespan***

Cumulonimbus: ***generally in the shape of anvils. Produce the majority of thunderstorms.***

(3) (Slide 55) Cumulonimbus clouds are often referred to as thunderheads. Thunderstorms are produced by these clouds.

Cumulonimbus Clouds: Thunderhead

f. (Slide 56) Less Common Clouds:

(1) **Orographic or lenticular** clouds develop in response to the forced lifting of air by the earth's topography. Air passing over a mountain oscillates up and down as it moves downstream. Initially, stable air encounters a mountain and is lifted upward and cools. If the air cools to its saturation point during this process, the water vapor condenses and becomes visible as a cloud. Upon reaching the mountain top, the air is heavier than the environment and will sink down the other side, warming as it descends. Once the air returns to its original height, it has the same buoyancy as the surrounding air. However, the air does not stop immediately because it still has momentum carrying it downward. With continued descent, the air becomes warmer and ascends back to its original height. Lenticular clouds are cloud caps that often form above pinnacles or peaks and usually indicate higher winds aloft. Cloud caps with a flying saucer shape, indicate extremely high winds (over 40 knots). Lenticular clouds should always be watched for changes; if they grow and descend, bad weather can be expected.

(2) **Contrails** are clouds that are made by water vapor being inserted into the upper atmosphere by the exhaust of jet engines. Contrails evaporate rapidly in fair weather. If it takes longer than two hours for contrails to evaporate, then there is impending bad weather.

Less Common Cloud Formations

Orographic or Lenticular Clouds: ***Look similar to contact lenses. Indicate poor weather in the near future.***

Contrails: ***Exhaust from jets creates clouds in the upper atmosphere; evaporate quickly in fair weather; contrails that takes longer than 2 hours to evaporate indicate impending bad weather***

(3) (Slide 57) Lenticular clouds often cap mountain peaks and indicate high winds; they can indicate an approaching storm if they lower and grow over time.

Lenticular Clouds

(4) (Slide 58) Lenticular clouds can also form in the sky and look like flying saucers or waves. Again these indicate high winds.

Lenticular Clouds

Learning Step/Activity 3 - List the indicators of impending bad weather.

a. (Slide 59) You can make a number of general observations that can give you a sense of what the weather will do. You can determine the probability that weather will effect your operation by combining your knowledge of winds, clouds and noting temperature changes, and changes in air or barometric pressure. Inclement weather is not an excuse to stop training or halt operations; by making predictions about the weather, you can take the necessary steps to mitigate the effects of the weather on your mission.

b. The following are often indicators that the weather is deteriorating:

(1) Lenticular clouds, plumes of blowing snow off ridges and peaks indicate high winds and an approaching, often fast moving storm system.
(2) Mares Tales (cirrus clouds), or a halo around the sun/moon (cirrostratus clouds), indicate that a storm system is approaching and is about 24-36 hours away.
(3) Lowering, thickening cloud layers.
(4) Thunderheads (cumulonimbus clouds).
(5) Falling barometer. If you have access to an altimeter it can be used to predict weather. If you are in a stationary position, watch the altimeter for changes – if the altitude appears to increase and you have not changed positions, the pressure is falling and may indicate an approaching storm (low pressure) system. The opposite is also true. If you are in a position and the weather has been poor, watch the altimeter. If the altitude decreases over time and you have not changed positions, a high pressure system is approaching and the weather should improve.
(6) You may notice the temperature fall as a winter storm comes to a close. Colder temperatures often precede clear weather. Conversely, a general warming trend often precedes a storm system.
(7) Sudden changes in wind direction or intensity may also be indicative of an approaching storm.
(8) Contrails that do not dissipate within 2 hours.

Learning Step/Activity 4 – Describe weather characteristics, hazards and phenomena that can effect military operations.

a. (Slide 60) In temperate climates it is rare to have weather or terrain conditions that shut down training or actual military operations. Planners simply figure out a work around and execute the mission. In cold regions, there are hazards and phenomena that can regularly degrade operations to a level that makes the meeting mission unrealistic and/or brings the mission to a level of risk that is unacceptable. You should look at current and anticipated weather hazards and evaluate how they will affect visibility, survivability and mobility.

Weather Hazards and Phenomena

b. (Slide 61) Extreme cold temperatures can be managed with appropriate training, clothing and equipment. When strong winds are added to the equation, wind chill temperatures can easily freeze flesh within minutes or seconds. **Wind chill** is the combined cooling effect of ambient temperature and wind on exposed skin. It is possible to figure out current and projected wind chill temperatures using this chart. This can be used as a tool to plan the clothing and precautions required to prevent cold injuries. Simply cross reference the ambient air temperature with the current wind speed to find the equivalent wind chill temperature.

Wind Chill

AIR TEMPERATURE IN FAHRENHEIT

WIND SPEED	40	35	30	25	20	15	10	5	0	-5	-10	-15	-20	-25	-30	-35	-40	-45
5	36	31	25	19	13	7	1	-5	-11	-16	-22	-28	-34	-40	-46	-52	-57	-63
10	34	27	21	15	9	3	-4	-10	-16	-22	-28	-35	-41	-47	-53	-59	-66	-72
15	32	25	19	13	6	0	-7	-13	-19	-26	-32	-39	-45	-51	-58	-64	-71	-77
20	30	24	17	11	4	-2	-9	-15	-22	-29	-35	-42	-48	-55	-61	-68	-74	-81
25	29	23	16	9	3	-4	-11	-17	-24	-31	-37	-44	-51	-58	-64	-71	-78	-84
30	28	22	15	8	1	-5	-12	-19	-26	-33	-39	-46	-53	-60	-67	-73	-80	-87
35	28	21	14	7	0	-7	-14	-21	-27	-34	-41	-48	-55	-62	-69	-76	-82	-89
40	27	20	13	6	-1	-8	-15	-22	-29	-36	-43	-50	-57	-64	-71	-78	-84	-91
45	26	19	12	5	-2	-9	-16	-23	-30	-37	-44	-51	-58	-65	-72	-79	-86	-93
50	26	19	12	4	-3	-10	-17	-24	-31	-38	-45	-52	-60	-67	-74	-81	-88	-95

WIND SPEED BASED ON MEASURES AT 33 FEET HEIGHT. IF WIND SPEED MEASURED AT GROUND LEVEL, MULTIPLY BY 1.5 TO OBTAIN WIND SPEED AT 33 FEET IN HEIGHT AND THEN UTILIZE CHART.

c. (Slide 62) **Ice fog** occurs when three things are present: temperatures of -30°F or colder a heat or vapor source, and still air conditions. The moisture from the heat source crystallizes in the air, forming fog. Firing a weapon can create ice fog producing a lasting signature and making alternate firing positions a necessity for both target acquisition and concealment. Stationary running vehicles can also produce ice fog creating a signature around them noticeable for miles.

Ice Fog

Temperatures are -30º F or colder; heat or vapor source present and still air conditions

Obscures vision and target recognition

Hinders movement

Leaves signature when weapons are fired or vehicles are operated

Numerous supplementary positions are needed for weapons

Can be used to conceal your movement

d. (Slide 63) A **blizzard** indicates that the following conditions will exist for a period of 3 or more hours: sustained winds or frequent gusts to 35 miles per hour or greater and considerable falling and/or blowing snow, reducing visibility to ¼ mile or less. **Ground blizzards** involve winds moving snow that is already on the ground. This hazard is common in the arctic and mountains and can last for days.

Blizzard

High winds

Blowing snow

Reduced visibility

Usually lasts 24 hours or less

e. (Slide 64) A **whiteout** is caused by sunlight being diffused through an unbroken cloud layer onto an unbroken snow surface. The horizon effectively disappears and individuals experience a loss of depth perception and an inability to distinguish irregularities in terrain. Whiteout is often referred to as ‘flat light’. Travel under whiteout conditions is difficult and dangerous and units should restrict or cease movement until the condition clears.

Whiteout

Loss of Depth Perception

Units Should Stop and Wait Condition out

f. (Slide 65) Normally, as elevation increases, temperature decreases. For mountainous areas, the general rule is for every 1,000 feet of elevation gained, the temperature decreases 3-5º F. This is known as the **adiabatic lapse rate**. When cold, calm, clear conditions exist, temperature inversions are the exception to this rule. During a troop movement or climb started in a valley, higher temperatures may often be encountered as altitude is gained. This reversal of normal cooling with elevation is called **temperature inversion.** Temperature inversions are caused when the mountain air is cooled by snow, ice and heat loss through thermal radiation. The cooler air settles into valleys and low areas. The inversion continues until the sun warms the surface of the earth or a moderate wind causes a mixing of the warm and cold air layers. Temperature differences can be as much as 20 degrees higher on hills or mountainsides that are just a few hundred feet from the valley floor.

Temperature Inversion

Cold air settles in low areas; warm air settles on top of cold

Can be 20°F difference

Bivouac site selection

g. (Slide 66) **Looming** is an optical illusion where objects appear closer and taller than they actually are. This condition exists in cold still air and can make range estimation inaccurate.

Looming

Optical illusion that causes objects to appear closer than they actually are; causes problems with range estimation

Normally occurs in extreme cold or hot dry air

h. (Slide 67) **Chinook winds** are warm dry winds that occur in the lee of high mountain ranges. In a few short hours, these winds can produce complete thaws in cold regions that typically do not see a thaw until the summer months. The conditions will mimic the spring break-up period typical of cold regions. Mud and flooding on roads and trails may make them impassable and frozen rivers and lakes may partially thaw, making them unreliable as transportation routes.

Chinook Winds

These are warm, dry winds that occur in the lee of high mountain ranges. It is a fairly common wintertime phenomena in the mountainous west and in parts of Alaska. These winds develop in well-defined areas and can be quite strong.

i. (Slide 68) The Aurora Borealis are caused by charged particles produced by the sun, deflected by the Earth's magnetic field and drawn towards the poles. This causes a light show in the sky, being most visible on cold clear nights and occurring throughout the year. They have been reported as far south as Mexico City. They disrupt AM communications but can enhance FM commo. In the southern hemisphere they are known as Aurora Australis.

Aurora Borealis

Caused by Charged Particles Produced by the Sun

Occur All Year

Aurora Borealis Activity Can Adversely Effect AM and satellite communications but may enhance FM communications

In Southern Hemisphere Called Aurora Australis

j. (Slide 69)

Aurora Borealis

SECTION IV. SUMMARY

You now have a general understanding of some of the weather hazards and phenomena that affect military operations in cold regions. During the remainder of this course, other lessons require you to use this knowledge to manage risk in the cold weather environment.

Check on Learning.

1. You have been in a patrol base for the past 18 hours. You checked your position and set your altimeter to 6500 feet when you arrived. Now your altimeter is reading 6650 feet, but you have not moved. What happened?

The pressure is dropping, causing your altimeter to rise even though you have not moved. You should expect the weather to deteriorate in the very near future.

2. Your unit began a movement on a snow covered ridgeline on an overcast day. After a short time, the light goes flat and your point man has lost all sense of direction. What is going on and what should you do?

Your point man is not lost, he is in a whiteout. If you can afford to, you should halt the unit and wait until conditions improve. If you cannot wait, movement must be slow and methodical.

SECTION II. INTRODUCTION

Motivator (Slide 1) You must learn to survive in the cold weather environment before you can learn to fight in it. Military history has proven this again and again. This Russian Soldier froze to death during the Russo-Finnish war. The Russians invaded Finland with 26 motorized divisions that were unprepared for cold weather operations. The cold weather and an undermanned but well prepared Finnish Army took their toll. Through sheer numbers the Russians later prevailed, but they suffered an estimated one million dead; one Russian Commander remarked "We have gained just enough ground to bury our dead". You must understand the effect that cold weather has on your body and make preparations to keep yourself and those in your unit protected from the cold weather.

Cold Weather Injuries

Terminal Learning Objective (Slide 2)

ACTION	Protect yourself and your fellow Soldiers from cold weather injuries
CONDITION	You are a Soldier deployed to the field in conditions that range from 50° to -60° F. You are given the Extended Cold Weather Clothing System (ECWCS), other issued cold weather clothing items, the issued cold weather sleep system with insulating pad, access to a warming shelter and the requirement to protect yourself and your fellow Soldiers against cold injuries.
STANDARD	Apply preventive medicine countermeasures to prevent cold weather injuries. Perform first aid for cold weather injuries. Do not sustain a cold weather injury during the course.

Safety Requirements: For classroom training discuss emergency procedures in case of fire or natural disaster.

Risk Assessment: Low

Environmental Considerations: None

Evaluation: You will be tested on your knowledge of cold weather injuries during a quiz (see training schedule for date and time. You need to score a 70% on this quiz in order to receive a GO. There are also questions related to this lesson on the final written examination (CWLC only; see training schedule for date/time of exam). You must score a 70% on the written exam in order to receive a GO. If you fail the written exam, you will be given a second exam after re-training has been conducted. If you fail this second examination, you will be dismissed from the course. In addition, you are expected to practice countermeasures that will prevent you from sustaining a cold weather injury. If you sustain a cold weather injury you will be dismissed from the course (at the discretion of the Commander).

Instructional Lead-In (Slide 3) One of the biggest threats to Soldiers and their family members in Alaska is cold weather injuries. You must understand how to care for yourself in one of the harshest environments in the world. You are also responsible for preventing these injuries in your Soldiers. This block of instruction provides you with TTPs to prevent cold weather injuries. It also provides you with the first aid procedures for cold weather injuries.

Cold Weather Injuries

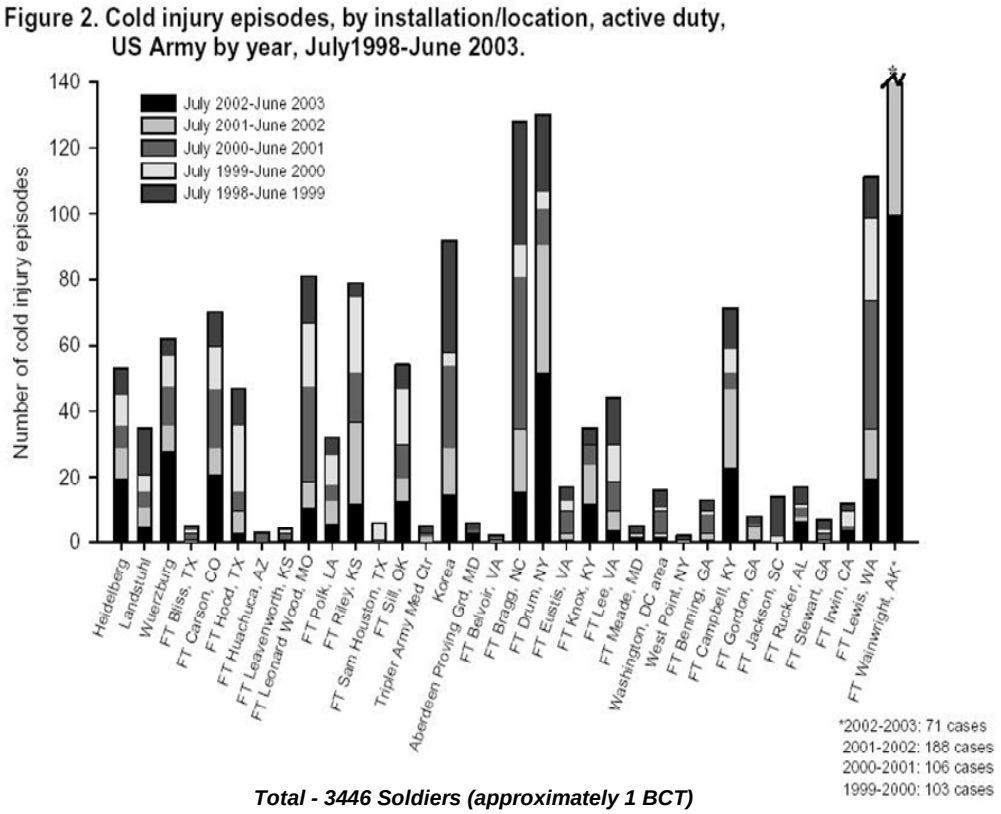

Total - 3446 Soldiers (approximately 1 BCT)

SECTION III. PRESENTATION

Learning Step/Activity 1 – (Slide 4-5) Identify the environmental risk factors that make you susceptible to cold weather injuries.

a. Obtain a current weather forecast.
b. Determine current temperature and wind speed.
c. Determine the equivalent wind chill temperature using the wind chill chart. Wind chill is the combined cooling effect of wind and ambient temperature on your skin (convective heat loss). Given the current ambient temperature of _____ and the current wind speed of ____, what is the wind chill temperature?_____

Wind Chill Chart

AIR TEMPERATURE IN FAHRENHEIT

WIND SPEED	40	35	30	25	20	15	10	5	0	-5	-10	-15	-20	-25	-30	-35	-40	-45
5	36	31	25	19	13	7	1	-5	-11	-16	-22	-28	-34	-40	-46	-52	-57	-63
10	34	27	21	15	9	3	-4	-10	-16	-22	-28	-35	-41	-47	-53	-59	-66	-72
15	32	25	19	13	6	0	-7	-13	-19	-26	-32	-39	-45	-51	-58	-64	-71	-77
20	30	24	17	11	4	-2	-9	-15	-22	-29	-35	-42	-48	-55	-61	-68	-74	-81
25	29	23	16	9	3	-4	-11	-17	-24	-31	-37	-44	-51	-58	-64	-71	-78	-84
30	28	22	15	8	1	-5	-12	-19	-26	-33	-39	-46	-53	-60	-67	-73	-80	-87
35	28	21	14	7	0	-7	-14	-21	-27	-34	-41	-48	-55	-62	-69	-76	-82	-89
40	27	20	13	6	-1	-8	-15	-22	-29	-36	-43	-50	-57	-64	-71	-78	-84	-91
45	26	19	12	5	-2	-9	-16	-23	-30	-37	-44	-51	-58	-65	-72	-79	-86	-93
50	26	19	12	4	-3	-10	-17	-24	-31	-38	-45	-52	-60	-67	-74	-81	-88	-95

WCT (°F) = 35.74 + 0.6215T - 35.75(V0.16) + 0.4275T(V0.16)
Where T is temperature (°F) and V is wind speed (mph)

WIND SPEED BASED ON MEASURES AT 33 FEET HEIGHT. IF WIND SPEED MEASURED AT GROUND LEVEL, MULTIPLY BY 1.5 TO OBTAIN WIND SPEED AT 33 FEET IN HEIGHT AND THEN UTILIZE CHART.

Learning Step/Activity 2 - (Slide 6) Identify the mission risk factors that make you susceptible to cold weather injuries.

a. Determine the work intensity. What type of training or mission will you be conducting (Ambush vs. foot march vs. firing range)? Will you be stationary, moving or a combination of both?

b. Determine the duration of cold exposure. How long will you be exposed?

c. Determine the availability of heated shelters, cold weather clothing and equipment, food and water. Will heated shelters be available during the mission? Do you have to set-up your own shelter? Do you know how? Do you have the proper resources to heat the shelter – stove, fuel? Will shelter be available when you arrive at your destination or will you need to wait for support? How will you get water? Do you need to melt snow, or is water resupply a possibility? What type of rations are available (MCWs or MREs)? Do you and your Soldiers have adequate, serviceable clothing and equipment (sleeping bags with insulating pad)?

Mission Risk Factors

- How intense is the workload for this mission/training?
- How long will you and your Soldiers be exposed?
- What is the availability of heated shelters, cold weather clothing and equipment, food and water?

Learning Step/Activity 3 - (Slide 7) Identify individual risk factors that make you more susceptible to cold weather injuries.

Individual risk factors

- How does your body regulate heat (heat gain vs. heat loss)?
- How does your body respond to the cold weather environment?
- What types of cold weather injuries can you sustain and how do you treat them?
- What other individual factors make you more or less susceptible to cold weather injuries?

a. (Slide 8) Describe how your body regulates heat (thermoregulation). Your body maintains a relatively constant core temperature by balancing heat gain from the environment and metabolism with heat loss. When the two are equal, you lose very little heat and you are able to maintain a body core temperature that averages 98.6° F.

(1) **Heat gain.** Your basal metabolism produces heat as you consume energy to maintain basic life functions. At rest this is known as the basal metabolic rate (BMR). You also generate heat through normal daily activities. You can generate up to 18 times the normal BMR through vigorous exercise; this is known as exercise metabolism. Finally you can gain (a very little bit) heat through external heat sources such as the sun, fires, stoves, etc.

(2) **Heat loss: Radiation** is the normal loss of body heat to the surrounding air. This is direct energy emission usually in the form of infrared radiation. Clothing manufacturers have tried to create clothing that re-captures this lost heat without much success (eg. Space Blanket). There is very little you can do to prevent this form of heat loss. Even with the best cold weather clothing, radiated heat will be transferred to the clothing and then out to the surrounding atmosphere. This form of heat loss generally does not become an issue until temperatures reach -20º F.

(3) **Conduction** and **convection** both involve the transfer of heat energy between two objects of different temperatures that are in contact with one another. These forms of heat loss are the most dangerous to you. Fortunately, you can use cold weather clothing and equipment to reduce the effects of heat loss from conduction and convection. Conduction occurs as heat is transferred from a warm object to a cold object. When you lay down on cold, bare ground, you lose heat to the ground. Convective heat loss occurs as a surrounding colder medium (air or water) is heated by your skin. This type of heat loss is generally negligible in temperate climates. ***In cold weather climates convective heat loss is the major contributor to heat loss.*** Wind increases the effects of convective cooling by maintaining the temperature difference between the body and the air. The stronger the winds, the faster heat is stripped away from the body; the amount of heat extracted by moving air increases as the square of the velocity. This effect is known as wind chill.

(4) **Respiration** is the loss of body heat (and water loss) as you breathe.

(5) **Evaporative** heat loss occurs as you sweat and the sweat converts from a liquid to a gas.

If the body is exposed to the cold, and heat loss occurs, the balance is disrupted. So how does your body cope with this heat loss/cold exposure?

b. (Slide 9) Describe how your body responds to the cold weather environment.

(1) SHELL/CORE EFFECT: As you begin to experience heat loss, your body will pull blood from the extremities (shell) and into the core of the body (torso) in order to ensure that critical systems (heart, lungs, kidneys, liver etc.), stay at the proper temperature. You gain very little from the shell/core effect; you would get the same benefit from putting on a light business suit. The negative side of the shell/core effect is that your fingers, toes, facial features and other extremities begin to feel and are colder.

(2) COLD DIURESIS: Due to the shell-core effect, the kidneys sense an increase in blood volume and some of this fluid volume is converted to urine. The increase in blood volume in the core also disrupts your thirst mechanism. You will urinate more frequently, and you are less likely to drink liquids making you more susceptible to dehydration and cold weather injuries.

(3) SHIVERING THERMOGENESIS: If the shell core effect does not counteract the cold stress and/or you do not take voluntary steps to reduce the cold stress, you will begin to shiver. Heat production (thermo genesis) from shivering can be up to six times your resting metabolic rate. Your coordination can be significantly impacted by shivering that cannot be controlled.

c. (Slide 10) Identify individual factors that can make you more/less susceptible to cold weather injuries. Consider:

(1) During most deployments, fatigue, under-nutrition and dehydration are ever present problems for you. Fatigue, low blood sugar and dehydration all decrease the ability of your body to deal with cold stress. You may be at further risk from a number of factors which may or may not be within your control.

(2) **Body composition.** Some individuals seem to be able to maintain body core temperatures better than others. This is due to individual variability in body composition. Convective heat loss at the skin is the main way the body loses heat in the cold weather environment. Individuals that are short and stocky have a reduced skin surface area and are less prone to heat loss than taller, leaner individuals. Body fat is also a better insulator than other body tissues; those with higher body fat composition typically lose less heat to the environment.

(3) **Age** has been shown to play a role in the susceptibility of Soldiers to cold weather injury. Soldiers older than 35 years of age may suffer the effects of cold more readily than younger Soldiers. Recent data has shown that cold injury rates are higher in young male Soldiers, from warm climates, with less than eighteen months of service. This is probably due to the fact that these individuals are typically exposed to cold, adverse conditions for longer periods of time.

(4) **Gender and Race.** Women sustain twice the number of peripheral cold injuries than men. African American male and female Soldiers sustain two to four times the number of cold weather injuries than their Caucasian counterparts. These gender and race differences are due to variability in body composition.

(5) **Fitness** level does not directly affect the Soldier's ability to handle the cold. However, Soldiers with a high fitness level will be able to sustain work for longer periods of time before fatigue sets in. These Soldiers also recover faster and are often less susceptible to injury or illness.

(6) **Experience.** The morale of Soldiers thrust into a cold weather environment can quickly decline. Basic survival often becomes the only focus. Soldiers may withdraw and mission requirements can take a backseat to individual needs. Conversely, meeting mission requirements can quickly override basic Soldier needs. **While it is often possible to tough it out in temperate climates, in the cold weather environment this mentality will lead to cold injuries and combat ineffective Soldiers.** Experiential based training for Soldiers reduces the physiological and psychological difficulties associated with the cold weather. Practical experience in the cold weather environment is invaluable to ensuring the success of a unit conducting operations in cold regions.

(7) **Level of training.** IAW USARAK Regulation 350-1, ALIT is the minimum cold weather training requirement for all Soldiers in USARAK. CWLC graduates are the trainers for ALIT and serve as unit subject matter experts. CWOC provides senior leaders and staff with 'what right looks like' for ALIT.

(8) **Drugs and alcohol.** Tobacco and/or alcohol use can be a contributing factor to cold weather injuries. Tobacco is a vasoconstrictor and therefore can increase the likelihood of cold injuries to extremities. Alcohol can create an artificial feeling of warmth, mask the symptoms of cold weather injuries and suppress normal body reactions to the cold. Some prescription drugs may contain substances that will increase the likelihood of cold injuries.

(9) **Diseases or injuries** that interfere with circulation (e.g. Raynaud's Syndrome, diabetes, poor circulation) can increase the likelihood of cold weather injury.

(10) **Prior cold weather injuries.** Soldiers that have sustained cold weather injuries in the past are at increased risk for similar injuries in the future. Unit SOP should dictate a marking system to ensure that these individuals can be easily identified for monitoring.

When your body cannot keep up with the demand for heat, you will sustain a cold weather injury…

Learning Step/Activity 4 - (Slide 11) Identify and treat cold weather injuries.

a. (Slide 12) Identify **Chilblain**.

(1) Chilblain (also known as pernio or kibe) is a non-freezing cold injury typically occurring after 1-5 hours in cold-wet conditions, at temperatures below 50º F.
(2) Small lesions appear on the skin usually on the tops of the fingers. Ears, face, and exposed shins may also be involved. The lesions are swollen, tender, itchy and painful.
(3) Upon re-warming, the skin becomes inflamed, red and hot to the touch and swollen with an itching or burning sensation that may continue for several hours after exposure.
(4) Eventually all symptoms subside. There are no lasting effects from chilblain.

Chilblain

- Non-freezing cold weather injury
- Occurs n cold-wet conditions below 50° F
- Small, red, itchy or painful lesions appear on the skin
- No long lasting effects

b. (Slide 13) Perform first aid for chilblain.

(1) Re-warm the affected part using skin to skin contact.
(2) Do not rub or massage affected areas.
(3) Do not place the affected part close to a heat source.
(4) Contact medical personnel for further evaluation.

c. (Slide 14) Identify **Frostbite.**

NOTE: All cases of frostbite must be evacuated to a medical facility for treatment.

(1) Frostbite occurs when you freeze your body tissue. The ambient air temperature must be below 32º F for this injury to occur. ***If the ambient temperature is above 32º F, but is below 32º F with wind chill, frostbite cannot occur.***

(2) Frostbite generally occurs in exposed skin or extremities such as the nose, ears, cheeks, hands and feet.

(3) Contact frostbite can occur when bare skin is cooled quickly from contact with an extremely cold object. Frostbite can also occur instantaneously when skin comes in contact with super-cooled liquids that do not freeze at 32º F, such as gasoline, petroleum products, antifreeze etc.

(4) There are four degrees of frostbite and each is defined by the level of tissue involvement. A diagnosis by medical doctor is required to determine the degree of frostbite. **For field identification and treatment, frostbite can be classified as superficial or deep.**

Frostbite

- Frozen body tissue; usually the extremities – hands, face, ears, feet and (rarely) eyes.
- Ambient air temperature must be below 32° F for frostbite to occur.
- Gradual onset progressing from painful, tingling sensation to cold and numb OR
- Contact frostbite from super-cooled objects or liquids such as fuel.
- Identify frostbite as superficial or deep.

d. (Slides 15-18) Identify **Superficial frostbite.**

Superficial Frostbite

Involves the upper layer(s) of skin only

Skin is:

- white, waxy and pale in lighter skin types
- red, pale or darkened in darker skin types
- numb
- moves over underlying layers
- relatively soft and pliable

Superficial Frostbite

e. (Slide 19) Perform first aid for superficial frostbite.

(1) Re-warm the affected part using skin to skin contact. Use a warm hand, armpits, a warm belly etc.

- Face, ears and nose. Cover the casualty's affected area with his/her and/or your bare hands until the sensation and color return.
- Hands. Place the affected part under the armpit's or on the belly. Cover with clothing.
- Feet. Remove the casualty's boots and socks and place the affected parts under clothing and against the body of another Soldier.

(2) If possible, submerge the affected part in water heated to 104-108° F. You must maintain this temperature range while soaking; if you choose this method be sure you can monitor the temperature and replace with warm water as necessary.

(3) Take ibuprofen immediately – this drug will help reduce the damage as the frostbite re-warms.

(4) DO NOT ALLOW THE INJURY TO RE-FREEZE. In almost all cases, re-freezing the injury will lead to deep frostbite.

(5) DO NOT rub or massage the affected area.

(6) DO NOT place the affected part close to a heat source.

(7) DO NOT allow tobacco or alcohol use.

(8) Aloe can help with the healing process.

(9) Contact medical personnel for further evaluation/evacuation.

f. (Slides 20-24) Identify **Deep frostbite.**

Deep Frostbite

- Can be down to and include the bone
- Blisters (blebs) often form after re-warming
- Skin is:
  - similar in coloration to superficial frostbite
  - not pliable – dents when you push on it
  - patient describes ‘wooden’ feeling
  - pale white and frozen solid in extreme cases

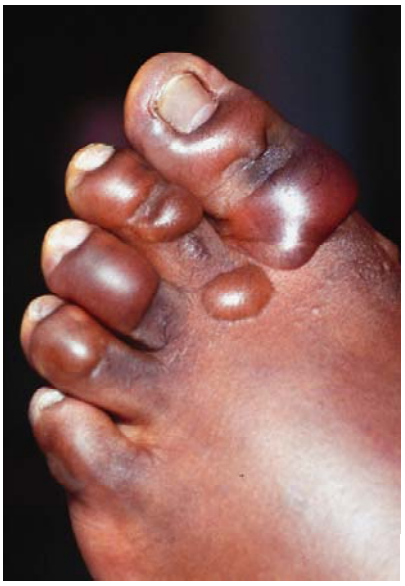

g.(Slide 25) Perform first aid for deep frostbite.

(1) Treatment steps are the same.
(2) Protect blebs with dry, sterile dressings.
(3) Cover ruptured blebs with antibiotic ointment and a sterile dressing.
(4) Contact medical personnel for further evaluation/evacuation.

WARNING: DO NOT attempt to thaw the casualty's feet or other seriously frozen areas if the Soldier will be required to walk or travel to a medical care center to receive medical treatment. The possibility of injury from walking is less when the feet are frozen than after they have been thawed (if possible, evacuate by litter and/or avoid walking). Thawing in the field increases the possibility of infection, gangrene or injury.

h.(Slides 26-30) Identify **Immersion syndrome**.

Immersion Syndrome

- **non-freezing cold weather injury that usually involves the feet**
- **also known as immersion foot or trench foot**
- **requires prolonged exposure to cold-wet conditions - at least 12 hours but usually 4-5 days**
- **blood flow is reduced to the extremity by the cold**
- **foot is cold to touch, with some swelling, and is white or bluish; may be numb**
- **Upon re-warming there is swelling; the foot will be red and blisters may form accompanied by tingling pain that is often severe**
- **Symptoms can last for weeks to months and include tingling, creeping pain, increased sensitivity to cold and increased perspiration of the foot**

i. (Slide 31) Perform first aid for immersion syndrome.

(1) Re-warm the injured body part gradually by exposing to warm air.
(2) If possible, submerge the affected part in water heated to 104-108° F. You must maintain this temperature range while soaking; if you choose this method be sure you can monitor the temperature and replace with warm water as necessary.
(3) Clean and dry the foot carefully to prevent infection.
(4) Administer ibuprofen.
(5) DO NOT rub or massage the affected area.
(6) DO NOT place the affected part close to a heat source.
(7) DO NOT allow tobacco or alcohol use.
(8) DO NOT allow the individual to walk on the injury; evacuate by litter.
(9) Contact medical personnel for further evaluation.

j. (Slides 32-33) Identify **Hypothermia.**

(1) Hypothermia occurs when your core body temperature falls below 95º F.

(2) Hypothermia is characterized as mild, moderate or severe, based upon core body temperature.

(3) Mild hypothermia occurs when the core body temperature is between 90 and 95º F.

(4) Moderate hypothermia occurs at core body temperatures of 80-89º F.

(5) Severe hypothermia exists when the core body temperature falls below 80º F.

(6) Rectal temperature measurement is the only way to determine an accurate core body temperature. As it is unlikely that this method will be used in the field, obvious signs and symptoms can be used to make a diagnosis.

(7) ***All levels of hypothermia are potentially life threatening medical emergencies and require immediate care in a medical facility.***

(8) Warning signs. As core body temperature begins to fall, shivering will be the most noticeable symptom. Shivering alone does not indicate hypothermia, but it does indicate that the body is having a problem with the cold.

Hypothermia

- Body core temperature falls below 95° F from exposure to cold conditions
- Onset is more likely if you are dehydrated, are not eating properly and/or are over fatigued
- Cold-wet conditions are most likely to bring on hypothermia
- Cold water immersion can induce hypothermia
- Varying degrees of hypothermia:
  - Mild hypothermia
  - Moderate hypothermia
  - Severe hypothermia
- ***Hypothermia is a medical emergency!***

(9) **Mild hypothermia** symptoms:

(a) Shivering
(b) Lack of sound judgment; confusion, apathy and “mild stupidity”
(c) Pale, cool skin
(d) increased heart rate and respiratory rate
(e) “umbles” – stumbles, fumbles, grumbles, mumbles. Gross motor skills function (stumble just walking) as well as fine motor skills (fumble with tasks that require manual dexterity such as manipulating a rifle). Personality changes that include grumbling and incoherent mumbling.

(10) **Moderate hypothermia** symptoms:

(a) Uncontrollable shivering
(b) Worsening of the “umbles”
(c) Increased confusion
(d) Increased heart and respiratory rates
(e) Cold and pale skin

(11) **Severe hypothermia** symptoms:

(a) Cessation of shivering
(b) Muscle rigidity
(c) Stupor progressing to unconsciousness
(d) Slow and/or non-palpable pulse and respirations
(e) Cold, bluish skin

NOTE: All cases of hypothermia must be evacuated to a medical facility for treatment.

k. (Slide 34) Perform first aid for mild and moderate hypothermia.

NOTE: All cases of hypothermia must be evacuated to a medical facility for treatment.

(1) Change the environment the casualty is in from cold and wet to warm and dry.
(2) Replace damp clothing with dry clothing.
(3) Add a windproof/waterproof layer and/or place the casualty in a shelter.
(4) Add extra insulation under and around the casualty.
(5) Provide the casualty with food and warm liquids.
(6) Exercise mildly hypothermic patients.
(7) Package a moderately hypothermic casualty in a hypothermia wrap.
(a) Lay a poncho on the ground.
(b) Lay an Insulating pad on top of the poncho.
(c) Lay a closed sleeping bag on top of the insulating pad.
(d) Lay an open sleeping bag on top of the first one.
(e) Place the patient inside. Add a hot water bottle to the chest area. Do not place it directly against the skin. Zip the sleeping bag closed.
(f) Place a third, open sleeping bag on top of the second.
(g) Fold the poncho around the patient like a burrito.

l. Perform first aid for severe hypothermia.

(1) Handle with care. Rough treatment can cause the casualty’s heart to stop.
(2) Contact medical personnel immediately.
(3) Use supplemental oxygen, if available or begin rescue breathing if breathing has stopped or is barely detectable. Breathe for the patient for 3-15 minutes before moving or beginning evacuation.
(4) Change the environment the casualty is in from cold and wet to warm and dry.
(5) Carefully remove damp/wet clothing.
(6) Package in a hypothermia wrap.
(7) Evacuate using the gentlest means available.
NOTE: Ask the students if they have any questions. Put them on a five minute break.

Learning Step/Activity 5 – Assess the hazards to determine the risk of sustaining a cold weather injury.

a. (Slide 36) Determine the risk level for frostbite.

Is the ambient temperature less than 32° F? If it is, use the risk of frostbite chart to determine the amount of time it will take to develop frostbite. Determine the level of danger. Given the current ambient temperature of _____ and the current wind speed of ____, how long will it take your flesh to freeze? What danger level does this indicate?

Risk Of Frostbite

AIR TEMPERATURE IN FAHRENHEIT

WIND SPEED	10	5	0	-5	-10	-15	-20	-25	-30	-35	-40	-45
5	>2H	>2H	>2H	>2H	31	22	17	14	12	11	9	8
10	>2H	>2H	>2H	28	19	15	12	10	9	7	7	6
15	>2H	>2H	33	20	15	12	9	8	7	6	5	4
20	>2H	>2H	23	16	12	9	8	8	6	5	4	4
25	>2H	42	19	13	10	8	7	6	5	4	4	3
30	>2H	28	16	12	9	7	6	5	4	4	3	3
35	>2H	23	14	10	8	6	5	4	4	3	3	2
40	>2H	20	13	9	7	6	5	4	3	3	2	2
45	>2H	18	12	8	7	5	4	4	3	3	2	2
50	>2H	16	11	8	6	5	4	3	3	2	2	2

GREEN-LITTLE DANGER (frostbite occurs in >2H in dry exposed skin)

YELLOW - INCREASED DANGER (frostbite could occur in 45 minutes or less in dry, exposed skin)

RED- GREAT DANGER (frostbite could occur in 5 minutes or less in dry exposed skin)

Time to occurrence of frostbite in the most susceptible 5% of personnel.
Wet skin could significantly decrease the time for frostbite to occur

b. (Slide 37) Determine the overall risk level for cold weather injury. At this point, you should have a clear picture of the risk factors and hazards. You can use this information to determine the risk level for the training or mission.

(1) Determine the probability of a cold weather injury occurring.

(2) Determine the result or severity if a cold weather injury occurs.

(3) Using the chart below, determine the level of risk for cold weather injury for your mission or training event.

What is the risk level for cold weather injury?

Risk Assessment Matrix					
	Probability				
Severity	**Frequent A**	**Likely B**	**Occasional C**	**Seldom D**	**Unlikely E**
Catastrophic	**E**	**E**	**H**	**H**	**M**
Critical	**E**	**H**	**H**	**M**	**L**
Marginal	**H**	**M**	**M**	**L**	**L**
Negligible	**M**	**L**	**L**	**L**	**L**
E –Extremely High	**H – High**	**M – Moderate**	**L - Low**		

Learning Step/Activity 6 – (Slide 38) Develop controls that reduce the risk of cold weather injury.

a. Use the Temperature Zone Guidance in USARAK 385-4, Appendix A to determine special requirements and recommended actions for the current and forecast temperatures.

b. Use additional resources and develop controls that will reduce the possibility of cold weather injuries for your training event.

(1) U.S. Army Center for Health Promotion and Preventive Medicine (USACHPPM) website. http://usachppm.apgea.army.mil/

(2) U.S. Army Research Institute of Environmental Medicine (USARIEM) website. http://www.usariem.army.mil/

Learning Step/Activity 7 - (Slide 39) Take steps to prevent cold weather injuries during the mission/training event.

a. Wear the cold weather uniform properly. See below for details.
b. Drink 3.5-5 quarts of water per day.
c. Eat 4,500-6000 calories per day.
d. Conduct personal hygiene in cold weather.
(1) Shave prior to the rest cycle to allow your body to replenish oils that protect your face and reduce the risk of frostbite.
(2) Do not wear skin camouflage at temperatures below 32° F – camouflage makes it difficult to detect frostbite.
(3) Wash your entire body weekly.
(4) Clean feet, crotch and armpits daily.
(5) Remove boots and air dry feet daily. Change to dry socks daily.
e. Practice field sanitation in cold weather.
(1) Designate and use designated field latrines only.
(2) Designate and use snow collection points for melting snow for water/cooking.
(3) Pack out all trash. If you generate the trash, keep it with you until it can be collected and carried to the rear for proper disposal.

Learning Step/Activity 8 - (Slide 40-41) Wear cold weather uniform properly.

a. You are issued the Extended Cold Weather Clothing System (ECWCS). With moderate movement it should keep you warm and dry down to -60° F. All cold weather clothing systems have three layers that are required for proper function.

(1) (Slide 42) Wear a Base Layer (also known as Inner or Wicking layer) – The base layer(s) are those adjacent to your body. They should be comfortably loose. The main purpose of these garments is to wick excess moisture away from your body.

(2) Wear an Insulation Layer – The insulation layer(s) are the intermediate layer(s). They provide volume to enable you to trap warm air between your body and the outer garments. In addition, the insulation layer(s) help wick away excess moisture. These layers should be comfortably loose to trap a sufficient volume of air.

(3) Wear an Outer Shell Layer – The outer shell layer(s) are the external layers that protect you from the elements in your environment. A main function is to keep you dry. In addition, they provide additional volume for trapping warm air. These layers should also be comfortably loose.

b. (Slides 43-47) Follow clothing guidelines for wearing cold weather clothing and equipment.

You can use the acronym C.O.L.D. to ensure the proper wear of cold weather clothing and equipment. Keep it CLEAN. Avoid OVERHEATING, wear clothing LOOSE and in LAYERS and keep clothing DRY.

(1) Keep it CLEAN. Clothing keeps you warm by trapping warm air against your body and in the pores of the clothing itself. If these pores become filled with dirt, sweat or other grime, the clothing will not be able to do its job efficiently. Therefore, your clothes should be kept as clean as possible to keep you as warm as possible. Dry rub and air clothing when washing is not possible (demonstrate rubbing).

(2) Avoid OVERHEATING. The key is not to be hot, but comfortably cool; not cold, but cool. If at any time you are sweating, you are too hot. Sweating is a sign that your body wants and needs to cool down. Let the environment cool you down, not sweat. This may be as simple as opening buttons or unzipping zippers, instead of removing a whole layer of clothing. Once you stop work, or feel yourself getting cold, bundle up again just enough to keep cool.

(3) Wear clothing LOOSE and in LAYERS. Clothes should fit loosely for comfort. The more layers used, the more warm air will be trapped. Tight clothing will prevent air from becoming trapped between your body and clothes. It is the warm air that keeps you warm, not the clothes. Several thin layers working together will work better than one thick layer alone.

(4) Keep clothing dry. Once your clothing is wet, the water or sweat evaporates, drawing warmth away from your body. Moisture will enter clothing from two directions:

(a) Inside- perspiration and condensation/frost at cold temperatures from the moist heat put off from the body.

(b) Outside- Precipitation- rain, snow, ice, frost. Moisture reduces insulating properties of clothing. Brush snow and ice off clothing before entering heated shelters. Clothing can be dried by air outside or inside heated shelters away from heat source. Leather items should be dried slowly. Turn GORE-TEX® clothing inside- out to facilitate drying in a heated shelter.

c. (Slide 48) Wear the Generation II ECWCS.

NOTE: CIF and/or your unit may issue other/additional items based upon your clothing menu and mission.

NOTE: The instructor will talk a demonstrator through the different layers of clothing and proper wear of each layer. The demonstrator will start with the base layer and add items as indicated by the instructor.

(1) (Slide 49) Wear the Base Layer-

(a) Polypropylene undershirt and drawers with standard wool socks (commonly referred to as polypro)
(b) You may be issued a lightweight and/or mid-weight polypropylene undershirt and drawers
(c) Wear the polypro next to your skin. DO NOT wear cotton undergarments under polypro. DO NOT wear ACUs on top of the base layer in the field. Cotton absorbs and traps moisture. Wear a pair of nylon shorts as an alternative to cotton underwear. Women should wear a nylon sports bra.
(d) The issued polypro has a zipper that can be used to form a mock turtle neck or allow you to ventilate as workload increases.
(e) You can layer the lightweight and mid-weight and heavyweight versions of polypro. This allows you more flexibility to remove garments as workload increases.
(f) You can wear a single wool sock or a two sock system. Wear the nylon dress sock or a polypro liner sock under the wool sock for more effective wicking.
(g) Wear an Arctic necklace: A 550 cord necklace with a lighter and chap stick can be worn next to the body. This allows you to keep the lighter warm and at your disposal when required.

GEN II ECWCS: Base Layer

Polypro undershirt and drawers:

- **Wear next to skin**
- **DO NOT wear cotton undergarments under polypro**
- **Standard issue is shown; lightweight and mid-weight are available and may be issued**
- **Worn with single wool sock or two sock system**

(2) (Slides 50-51) Wear the Insulation Layer-

(a) Shirt, Cold Weather, Black Fleece and Overalls, Cold Weather, Black Fleece (commonly referred to as Polar Fleece top and bottom)

- Wear the polar fleece over the base layer.
- The shirt has “pit zips” for ventilation. The full length zipper can be used to form a mock turtle neck or for ventilation as required. There is also a draw string at the bottom that can be cinched tight to keep wind from coming up under the shirt.
- The bibs are also intentionally sized short. There are full length zippers on each pant leg to allow you to don and remove the bibs without removing your boots.
- The Army has approved the use of this garment as an outer shell layer. However, it offers little protection from the wind and no protection from moisture. ***IAW USARAK Pamphlet 600-2, the black fleece will not be worn as an outer garment.***

GEN II ECWCS: Insulation Layer

• Polar Fleece Shirt

• Polar Fleece Overalls

• IAW USARAK Pamphlet 600-2, the black fleece WILL NOT be worn as an outer garment.

(b) Liner Cold Weather Coat and Liner Cold Weather Trousers (commonly referred to as smoking jacket and pants)

- This layer is made from the same material as the poncho liner – 1 ounce rip stop nylon quilted over polyester batting. Wear this item over the base layer.
- The coat has slits under the arms for ventilation.
- The trousers are intentionally sized short, to avoid the need to tuck them into the boot.

GEN II ECWCS: Insulation Layer

Liners, Cold Weather – Coat and Trousers:

• Wear over base layer

• Same material as poncho liner

• Coat has slits under arm for ventilation

• Trousers are sized short intentionally

(3) (Slide 52) Wear the Outer Shell Layer-

(a) Wear the ECWCS Parka, Universal Camouflage Pattern, Generation II, parka and trousers (commonly referred to as Generation II GORE-TEX® top and bottom)

- Generation II GORE-TEX® is issued in woodland camouflage, desert camouflage or the universal camouflage (ACU) pattern. The Parka has does not have an inner liner. There are hand warmer and cargo pockets at the waist as well as two map pockets adjacent to the zipper and two sleeve pockets. The hood can be stowed away, but does not have points of attachment for a fur ruff. There is a snow skirt to prevent snow and wind from entering underneath the jacket. It also has "pit zips" for ventilation. The trousers have two hand warmer pockets and two cargo pockets.
- Wash GORE-TEX® in any commercially available detergent. Setting should be permanent press or cotton sturdy. Garment must be thoroughly rinsed – residual detergent will decrease the water repellency qualities. Over time the water repellent qualities of GORE-TEX® will be degraded by washing and normal use. There are products and procedures that can help restore the water repellent qualities of GORE-TEX®. Some post laundry facilities will do this for you. 24 8 oz bottles NSN 8030-01-408-9446 Cost $102.91. Post Laundry can get in 5 gallons NSN 8030-01-408-9444. 55-gallon drums are also available with NSN 8030-01-408-9455. Some commercially available products that are authorized for use are StormShield (877-330-8760), Protex 2000 (800-658-5958) or X-pel (800-652-2533). To treat with any of these products wash the GORE-TEX® according to the label instructions. Then run the GORE-TEX® through a wash cycle without any detergent to ensure that it is completely rinsed clean of any soap residue. Set the machine again to the wash cycle and set the temperature to warm. Fill the machine until the clothing is completely covered with water. Add the water repellent (two ounces for the parka or 3 ounces for parka and trousers) and continue the wash cycle until it is completed. Tumble dry the clothing on permanent press and at medium heat (less than 130º) until dry.
- In the field, dry rub clothing to clean it.
- Wear the suspenders with the trousers. Put suspenders on so that the x pattern is centered between your shoulder blades. Wear the metal hook so that the piece of fabric is against your body to prevent the metal hook from rubbing against your body.

(b) Wear the Wool balaclava, ***and/or*** OR Windstopper Balaclava. There are three configurations:

- As a hat. Fold the bottom of the balaclava to the inside to form a hat. Place the hat onto your head with the face opening to the rear. As you breathe, condensation from your breath will form on your forehead. If you need to change configurations later, this will prevent you from placing wet material onto your face.
- Balaclava down, face exposed. Pull the balaclava over your head. Pull the lower portion of the face opening under your chin.
- Balaclava down, face covered. Pull the lower portion of the face opening up over your mouth and nose. Use goggles to cover eyes and remaining exposed skin if required.
- Never change the configuration of the balaclava during PT. Anticipate the configuration that will work best for the activity. This will come with experience. If you start with it down, leave it down; changing the configuration exposes wet skin to the cold air and is the cause of many of the frostbite cases in USARAK. Reference USARAK/CofS Policy Letter #0-08.

(c) Wear GORE-TEX® gloves with inserts OR trigger finger mittens with inserts OR arctic mittens

(d) Wear issued cold weather boots.

- Intermediate Cold-Wet Boots (ICWB) with removable liners (tan) NSN 8430-01-527-8274, are rated from 68º F to +14º F. You should receive two pairs of liners with this boot.
- Army Combat Boots (Hot Weather), NSN 8430-01-514-4935, are not acceptable for cold weather environments.
- Army Combat Boots (Temperate Weather) NSN 8430-01-516-1506, are acceptable until the temperature drops below 32º F.

- Extreme Cold Weather Boots (ECWB) NSN 8430-00-655-5535. They are also known as White Vapor Barrier boots, VB boots, and bunny boots. They are rated 14º F to -60º F and are for use in cold dry environments. Some VB boots have a pressure relief valve. The valve is used for airborne operations; when you change altitude rapidly, open the valve briefly to equalize pressure and then close the valve. For all other operations, keep the valve closed to prevent moisture from entering the boot. Wipe VB boots out at least once daily and change socks at the same time.
- Black Vapor Barrier Boots are rated to -20º F and are for use in Cold Wet Environments. These are no longer issued in Alaska.
- There is a fine line in between the point at which soldiers should switch from the ICW to the VB boot. The USARAK 385-4, Risk Management for Cold Weather Operations gives guidelines based on temperature zone. ***Temperature zone III 14º F to -19º F is the recommended time to switch to VB boots.*** It must be stressed that this is dependent on workload and that leaders should ensure that both pairs of boots are available to Soldiers in the event of a temperature swing or change of mission. This will give maximum flexibility.

(e) Wear the neck gaiter. It can be worn in three configurations:

- Wear it around your neck as a turtle neck.
- Wear it pulled up over your head, with the face exposed.
- From the second configuration, pull the bottom of the gaiter up over your mouth and nose.

(f) Wear gloves and mittens. ***At a minimum, always wear a contact glove when working in the cold.***

- Wear the **leather GORE-TEX® gloves with the wool inserts.** Try these on at CIF to ensure proper fit with inserts. The inserts serve as a contact glove. You are issued 2 pairs of wool inserts.
- The **trigger finger mittens** are made of canvas and deer skin palms (maintains flexibility in cold). Wear the trigger finger mittens with the wool trigger finger inserts. You are issued two pairs of inserts.
- The **arctic mittens** are made of canvas with deer skin palm and a polyester fiber backing that serves as a face warmer. They have a removable liner made from the same material as the poncho liner. Pull the liners out and inspect for holes, especially near any seams.
- Both the trigger finger mittens and arctic mittens have lanyards that allow you to remove the mittens without losing them. Wear the lanyard over your head. If you are not wearing the mittens, tuck them inside your outer shell to keep snow out of them and to keep them warm for later use.
- Fuels do not freeze and will be the same temperature as the air. ALWAYS wear POL handler gloves when working with fuels to prevent frostbite.
- Keep routine tasks routine by rehearsing with mittens.
- Make every effort to dry out clothing as soon as possible so that it can be re-used when needed. Damp clothing items can be worn close to the body (between the inner and intermediate layer) to dry or can be placed in the sleeping bag to dry out overnight. Larger items that have become wet should not be placed in the sleeping bag. Instead place them between the sleeping bag and sleeping mat or on drying lines in a heated tent.

Gen II ECWCS: Outer Shell Layer

- **Wear GORE-TEX® over base and insulation layers or over base layer for heavier activity levels**
- **Wear the GORE-TEX® trousers with suspenders**
- **GORE-TEX® water repellency can be restored**
- **Three balaclava configurations**
- **Three neck gaiter configurations**
- **Boots issued in basic training are NOT for cold weather**
- **Below 14º F, you should wear the white VB boot**
- **Always wear a contact glove when temperatures are below 32º F**

d. (Slide 53) Wear Generation III ECWCS (7 layer system).

(1) (Slide 54) Wear Level 1: Lightweight Cold Weather Undershirt and Drawers

(a) Long sleeve top and full-length bottom garments constructed out of silk-weight moisture wicking polyester. The material aids in the movement of moisture from the skin to the outer layers both while the wearer is moving or static.

(b) The top has holes in the sleeves for the thumbs. Place your thumbs through the holes to keep the garment down around your wrist.

(c) Wear next to skin or with the mid-weight cold weather shirt and drawers for added insulation and to aid the transfer of moisture.

Generation III ECWCS Level 1: Base Layer

Lightweight Cold Weather Undershirt and Drawers

Long sleeve top and full-length bottom constructed from silkweight moisture wicking polyester

Material aids in movement of moisture from the skin to the outer layers

(2) (Slide 55) Wear Level 2: Mid-Weight Cold Weather Shirt and Drawers

(a) Long sleeve top and full-length bottom garments constructed out of polyester “grid” fleece. Provides light insulation for use in mild climates as well as acting as a layer for colder climates. Provides an increase of surface area for the transportation of moisture away from the wearer during movement.

(b) The top has a zipper that can be used to form a mock turtle neck or allow you to ventilate as workload increases. The top has holes in the sleeves for the thumbs. Place your thumbs through the holes to keep the garment down around your wrist.

(c) Wear over lightweight cold weather undershirt and drawers or next to skin.

Generation III ECWCS Level 2: Base Layer

Mid-Weight Cold Weather Shirt and Drawers

Long sleeve top and full-length bottom garments constructed out of polyester ‘grid’ fleece

Grid fleece provides an increase of surface area for transportation of moisture away from the wearer during movement

Can be worn next to skin or over Level 1 for additional insulation

(3) (Slide 56) Wear Level 3: Fleece Jacket

(a) Acts as the primary insulation layer for use in moderate to cold climate. “Thermal Pro”, animal fur mimicking insulation provides an increase in the warmth to weight ratio along with a reduction in volume when packed.

(b) There are two inner mesh pockets. The zipper will from a mock turtle neck or can be used to ventilate the garment as required.

(c) Wear underneath shell layers. It is approved for use as an outer layer by the U.S. Army. However, it offers little protection from the wind and no protection from moisture. Therefore, during all NWTC courses the Green Fleece WILL NOT be worn as an outer garment.

Generation III ECWCS Level 3: Insulation Layer

Fleece Jacket is the primary insulation layer for use in moderate to cold climates.

Thermal Pro, animal fur mimicking insulation provides an increase in warmth to weight ratio along with a reduction in volume when packed.

Authorized for use as an outer garment in USARAK. Not authorized for use as an outer garment during NWTC courses.

(4) (Slide 57) Wear Level 4: Wind Cold Weather Jacket.

(a) Made of a lightweight, windproof and water repellant material. Acts as a minimum outer shell layer, improving the performance of moisture wicking of the insulation layers when combined with Body Armor and/or Army Combat Uniform.

(b) It has two sleeve pockets, and a mock turtle neck. Two chest level pockets are designed with mesh pocket linings to aid in ventilation while wearing body armor.

(c) Wear as wind protection during windy cool days.

Generation III ECWCS Level 4: Outer Shell

Wind Cold Weather Jacket is made of a lightweight, windproof and water repellant material

Acts as a minimum outer shell layer, improving the performance of moisture wicking layers when combined with Body Armor and/or the ACU

(5) (Slide 58) Wear Level 5: Soft Shell Cold Weather Jacket and Trousers Outer Shell Layer.

(a) Made of a highly water resistant, wind proof material that increases moisture vapor transfer over current hard shell garments. Provides a reduction in weight, bulk and noise signature during movement. Increase of breath ability improves performance of insulation layers by decreasing saturation due to moisture accumulation.

(b) It has a storable hood that works with the ballistic helmet. It has two hand warming pockets on the chest with mesh lining to aid in ventilation. It has pit zips and two sleeve pockets. Draw cords on the bottom prevent snow and wind from entering the system.

(c) Wear when the average temperature is below 14º F. You will determine the base and insulation layers necessary dependent upon temperature, wind and activity level.

Generation III ECWCS Level 5: Outer Shell

Soft Shell Cold Weather Jacket and Trousers

Made of a highly water resistant, wind proof material that increases moisture vapor transfer

Increase of breathability improves performance of insulation layers by decreasing saturation due to moisture vapor accumulation

Provides a reduction in weight, bulk and noise signature during movement

Best used when temperature is below 14º F.

(6) (Slide 59) Wear Level 6: Extreme Cold/Wet Weather Jacket and Trousers Outer Shell Layer.

(a) A waterproof layer for use in prolonged and/or hard rain and cold wet conditions.

(b) It has two pass through chest pockets for ventilation. It has a storable hood that works with the ballistic helmet.

(c) Wear when the average temperature is above 14º F and alternating between freezing and thawing. You will determine the base and insulation layers necessary dependent upon temperature, wind and activity level.

Generation III ECWCS Level 6: Outer Shell

Extreme Cold/Wet Weather Jacket and Trousers

A waterproof layer for use in prolonged and/or hard rain and cold wet conditions

Best used when temperatures are above 14º F and alternating between freezing and thawing

(7) (Slide 60) Wear Level 7: Extreme Cold Weather Parka and Trousers.

(a) Provides superior warmth with high compact ability, low weight, and low volume. Highly water resistant and windproof to provide wind and moisture protection.

(b) Sized to fit over the Body Armor during movement or static activities requiring maximum insulation. Trouser design incorporates full side zips for donning and doffing over boots and other layers.

(c) Wear in extreme cold weather and climates over all other layers; it is the last layer of protection. It is meant for static positions.

Generation III ECWCS Level 7: Outer Shell

Extreme Cold Weather Parka and Trousers

Provides superior warmth with low weight, and low volume

Highly water-resistant and windproof in order to provide wind and moderate moisture protection

Sized to fit over body armor

For extreme cold weather climates; the outer most layer of protection. Meant for static positions

e. (Slide 61) Use the issued sleep system.

(1) The Modular Sleep System (MSS) is designed for a temperature range of +50º F to -40º F. At the low end of this range, you will only be comfortable for about four hours of sleep because as you sleep, you compress the sleeping bag material. This system will replace all other sleep systems issued in the US Army.

(a) Use the patrol bag (Green/Foliage Green) when temperatures are above 30º F. If you do not have a shelter, use it with the bivouac cover.

(b) Use the Intermediate cold weather bag (Black/Gray-Green) from 30º F to -10º F. If you do not have a shelter, use it with the bivouac cover.

(c) In temperatures below -10º F, insert the Black Bag into the Green bag and snap and zip them together. Use this inside the bivouac cover for a temperature rating of -40º F. The newer ACU style is rated to -45º F.

(d) Wear no more than a single base layer inside the bag. You should not sweat inside the bag.

(2) You are also issued a 24'' x 72" x 3/8" thick polyethylene foam pad that is designed to put insulation between you and the ground. This insulating layer is essential to the sleep system as it prevents conductive heat loss to the ground. Use pine boughs, cardboard etc. as an insulating layer if the sleeping pad is lost or destroyed.

(3) You may be issued an air mattress. Open the valve to allow the mattress to self-inflate. This feature can fail in the field and you may need to blow the air mattress up. This introduces moisture into the air mattress and may cause problems with the valve freezing in the open or closed position.

Modular Sleep System (MSS)

The complete MSS system weighs about 7 pounds and includes:

- **Patrol Bag is rated 50º F to 30º F**
- **Intermediate Cold Weather Bag is rated 30º F to -10º F**
- **Vapor Permeable GORE-TEX® Bivouac Cover**
- **Intermediate Cold Weather bag goes inside the Patrol Bag which goes inside the Bivouac Cover. This provides protection from -10º F to -40º F for 4 hours of sleep.**
- **The newer ACU style is rated to -45º F**

f. (Slide 62) Care for the ECWCS.

(1) Before laundering make sure all zippers are zipped and all snaps and hooks are fastened. Tie draw cords together.
(2) For MSS use front load washing machine.
(3) Machine launder using delicate/gentle fabric cycle or by hand.
(4) Use lukewarm water (90º F) and cold water laundry detergent (i.e. Liquid Tide or Era Plus).
(5) Rinse in clean cold water.
(6) Dry in tumble dryer. Do not exceed temperatures of 130º F as degradation of component materials will occur. For Level VI, set on permanent press.
(7) Avoid over drying.
(8) To drip dry, place on a rust proof hanger.
(9) Do not press; Do not starch; Do not use fabric softeners; Do not bleach.

Learning Step/Activity 9 - (Slide 63) Take steps to prevent cold weather injuries during movement.

a. Start movements slightly cool to prevent profuse sweating during the movement.
b. Make adjustments to clothing and movement rate to prevent profuse sweating. Take a brief halt, 10-15 minutes after movement begins, to adjust clothing.
c. Keep clothing upgrade items like mittens and additional layers easily accessible for quick adjustments on the move.
d. Carry a minimum of 2 quarts of water.
e. Drink sufficient fluids (potable water, juices and warm, non-alcoholic beverages).
f. Eat food on the move.
g. Avoid lengthy halts. Take brief halts every hour. Halts of more than 5-10 minutes open you up to cold weather injuries because you are dressed for movement.
h. For vehicle movements, when exposed you must:
(1) Wear eye protection.
(2) Cover all exposed skin.

Learning Step/Activity 10 – (Slide 64) Fix cold challenges immediately to prevent a simple problem from becoming a cold weather injury.

NOTE: IF YOU SUSPECT THAT YOU OR SOMEONE ELSE HAS OR ARE DEVELOPING A COLD WEATHER INJURY, CORRECT THE PROBLEM IMMEDIATELY.

a. Remove wet clothing (if applicable) and replace with dry clothing.
b. Upgrade clothing as required.
c. Exercise. Perform exercises that involve the entire body.
d. Eat and hydrate.
e. If possible, get into a heated shelter.

Learning Step/Activity 11 – (Slide 65) Prevent cold weather injuries during PT.

(1) Follow the guidelines set forth in Appendix E: USARAK CG/CofS Policy Letter #0-08 Cold Weather Physical Training Policy.

(2) PT is no different than any mission or training event. Follow the above guidelines to identify and assess hazards and implement control measures that will protect you and your Soldiers from cold weather injury.

Learning Step/Activity 12 – Supervise and evaluate the effectiveness of controls.

a. Evaluate the controls constantly during the mission for effectiveness.

b. Take immediate action if additional controls are required.

c. Be disciplined enough to take care of yourself.

d. Look out for your fellow Soldiers and make corrections on the spot.

SECTION IV. SUMMARY

You must be able to prevent cold injuries before they happen. A Soldier that receives a cold weather injury is put on a 30 day profile. This means a minimum of 30 days that the Soldier cannot participate in outdoor training.

Check on Learning.

1. For any suspected cold weather injury you should:

a. Have the individual complaining drive on and tough it out.
b. Have medics look at the individual when you get around to it.
c. Evaluate the individual, make a diagnosis and decide what you should do next.
d. Stop what you are doing and focus on treating that individual immediately.

2. What is the treatment for superficial frostbite?

- Re-warm the affected part using skin to skin contact. Use a warm hand, armpits, a warm belly etc.
    - Face, ears and nose. Cover the casualty's affected area with his/her and/or your bare hands until the sensation and color return.
    - Hands. Place the affected part under the armpit's or on the belly. Cover with clothing.
    - Feet. Remove the casualty's boots and socks and place the affected parts under clothing and against the body of another Soldier.
- If possible, submerge the affected part in water heated to 104-108° F. You must maintain this temperature range while soaking; if you choose this method be sure you can monitor the temperature and replace with warm water as necessary.
- Take ibuprofen immediately – this drug will help reduce the damage as the frostbite re-warms.
- DO NOT ALLOW THE INJURY TO RE-FREEZE. In almost all cases, re-freezing the injury will lead to deep frostbite.
- DO NOT rub or massage the affected area.
- DO NOT place the affected part close to a heat source.
- DO NOT allow tobacco or alcohol use.
- Aloe can help with the healing process.
- Contact medical personnel or further evaluation/evacuation.

SECTION II. INTRODUCTION

Motivator A two man fuel handler team deployed to the field in support of maneuver units in preparation for an upcoming exercise. Although the plan called for the team to support from the main area in garrison, the participants decided to stay in the field to avoid traveling back and forth from the rear. The team stayed in the UMCP in a soldier crew tent using a commercial off the shelf heater to warm-up the tent at night (temperatures at night were between 30-40 degrees). The chain of command was aware that the team was using the commercial off the shelf heater to heat their tent. The team departed early afternoon to support the maneuver units, and because of various missions did not return until early morning. Late the next morning some Soldiers in the UMCP attempted to wake the team to obtain fuel. One of the Soldiers noticed a peculiar smell coming from the tent and made a comment to his supervisor about it. The supervisor investigated and found that the two man team had passed away during the night. It is suspected that they started the heater to warm up when they returned from their mission. They closed all of the vents and door flaps to keep the heat in and then went to sleep. The carbon monoxide build-up from the heater caused the deaths.

Terminal Learning Objective (Slide 2)

ACTION	Protect yourself and your fellow Soldiers against common cold weather and mountain environmental injuries
CONDITION	You are a Soldier deployed to the field in conditions that range from 50° to -60° F. You are given the Extended Cold Weather Clothing System (ECWCS), other issued cold weather clothing items, the issued cold weather sleep system with insulating pad, access to a warming shelter and the requirement to protect yourself and your fellow Soldiers against environmental injuries.
STANDARD	Apply preventive medicine countermeasures to prevent environmental injuries. Identify the signs and symptoms of environmental injuries. Perform first aid for environmental injuries. Do not sustain an environmental injury during the course.

Safety Requirements: For classroom training discuss emergency procedures in case of fire or natural disaster.

Risk Assessment: Low

Environmental Considerations: None

Evaluation: You will be tested on your knowledge of cold weather and mountain environmental injuries during a quiz (see training schedule for date and time. You need to score a 70% on this quiz in order to receive a GO. There are also questions related to this lesson on the final written examination (CWLC only; see training schedule for date/time of exam). You must score a 70% on the written exam in order to receive a GO. If you fail the written exam, you will be given a second exam after re-training has been conducted. If you fail this second examination, you will be dismissed from the course. In addition, you are expected to practice countermeasures that will prevent you from sustaining an environmental injury. If you sustain an environmental injury you will be dismissed from the course (at the discretion of the Commander).

Instructional Lead-In: Cold weather injuries are only part of the challenge in cold and mountainous regions. There are other hazards that you need to understand in order to prevent disease and non-battle injuries (DNBI). This lesson identifies these hazards and gives you an understanding of how to prevent and treat cold weather and mountain DNBI.

SECTION III. PRESENTATION

Learning Step/Activity 1 – Identify, treat and prevent snow blindness.

a. (Slide 3-4) What is it? Snow blindness is sunburn of the eyes (corneas). Overexposure to the sun that causes this condition can occur in less than an hour, especially in a snow covered environment at altitude. Snow blindness can occur even when the sun is diffused by clouds. Symptoms include:

(1) eyes feel like there is sand in them.
(2) severe eye pain.
(3) pink or red eyes.
(4) extreme sensitivity to light.

b. Perform first aid for snow blindness:
(1) Loosely bandage the eyes with sterile gauze. Wet the gauze with cold water to help with pain.
(2) Do not allow any exposure to light.
(3) Provide care for the individual over the next 24-48 hours as the individual is essentially blind.
(4) Administer OTC pain medications.

c. Prevention is simple – wear sunglasses or tinted goggles (preferably with UV protection) in a snow covered environment. (Slide 5) Improvised slit glasses can be used in survival situations.

Improvised Slit Glasses

Learning Step/Activity 2 – Identify, treat and prevent carbon monoxide poisoning.

a. (Slide 6-7) What is it? **Carbon monoxide poisoning** occurs when individuals breathe fumes from improperly ventilated heat sources (vehicles, space heaters etc.). Carbon monoxide is an odorless gas that replaces oxygen in the blood stream. Red blood cells actually bind with carbon monoxide more readily than with oxygen. Because your body requires oxygen, you slowly die from asphyxiation. Even just a few hours of exposure, can result in death.

(1) Initially symptoms include:
(a) headache
(b) confusion
(c) tiredness
(d) excessive yawning

(2) In more severe cases symptoms include:
(a) cherry red lips
(b) unconsciousness
(c) cardiac arrest

b. Perform first aid for CO poisoning.

(1) Move the individual to fresh air OR remove the source of the carbon monoxide and ventilate the area.
(2) Administer 100% oxygen.
(3) If breathing and/or heart has stopped, begin rescue breathing/CPR.
(4) Evacuate to definitive care.

c. Prevention:

(1) IAW USARAK CG/CofS Policy Letter #0-14, use only Army approved heaters. Army approved heaters are the only heaters authorized for use in sleeping areas, living areas or administrative work areas occupied by personnel.
(2) Ventilate all tents/shelters when running a heater/stove.
(3) Operate stoves only when a licensed, fully dressed, alert fire guard, with an operational fire extinguisher (5lb minimum), is present.
(4) If you suspect a problem with the heater (i.e. soldiers are exhibiting the signs and symptoms of CO poisoning) shut the heater down and rectify the problem.
(5) DO NOT sleep in a running vehicle.

Learning Step/Activity 3 – Identify, treat and prevent treat giardia.

a. (Slide 8-10) **Giardia** and another related parasite, **cryptosporidium** are commonly found in backcountry and third world water sources. Nearly 2.5 million cases are diagnosed in the United States annually. When ingested, these parasites cause:

(1) intense diarrhea.
(2) nausea.
(3) weakness.
(4) loss of appetite.

NOTE: It generally takes 10 days to two weeks after ingestion for symptoms to appear.

b. Perform first aid for giardia. If you suspect giardia, contact medical personnel for evaluation.

NOTE: Diagnosis and treatment must be determined by qualified medical personnel. Antibiotics are used to treat the illness.

c. Prevention:

(1) Use a treatment method for questionable water sources.
(a) Bring water to a rolling boil – this will kill all waterborne pathogens OR
(b) Use a commercial off the shelf water purification device (not a filter) – refer to the manufacturers instructions.
(2) Refer to FM 21-10 Field Hygiene and Sanitation for additional guidance on water purification methods.

Learning Step/Activity 4 – Identify, treat and prevent constipation.

a. (Slide 11) Constipation is infrequent and/or difficult movement of the bowels. Some individuals are reluctant to relieve themselves in cold or less than ideal conditions. Cold weather, wind and poorly constructed or maintained latrines create less than ideal conditions for heeding nature's call. This can all lead to constipation, an embarrassing and potentially serious and debilitating condition.

b. Perform first aid for constipation: Take a stool softener provided by medics.

NOTE: Medics may prescribe an enema or in extreme cases manual removal/surgery may be required.

c. Prevention:

(1) Use the latrine when you need to. You lose heat maintaining the temperature of your stool.
(2) Hydrate and eat properly.
(3) Provide a sheltered latrine area for Soldiers to utilize.

Learning Step/Activity 5 – Identify, treat and prevent heat exhaustion.

a. (Slide 12-13) What is heat exhaustion? Dehydration leads to heat exhaustion. Heat exhaustion is a volume problem – you do not have enough water in your system. Symptoms include:

(1) Increased heart rate.
(2) Increased respiratory rate.
(3) Headache.
(4) Dizziness.
(5) Nausea and vomiting.
(6) Thirst.
(7) Fatigue.
(8) Profuse sweating, cool clammy skin.

b. Perform first aid for heat exhaustion.

(1) Change the environment from hot to cool. Place casualty in a shady spot; pour water on the head and fan the casualty.
(2) Hydrate – oral rehydration salts (ORS) are very effective in replacing lost fluids especially in a cold weather environment where it may be difficult to administer IV fluids and/or
(3) Administer IV fluid.
(4) Rest.
(5) Contact a medic for further evaluation/evacuation.

NOTE: It will take 1 hour to replace 1 liter of fluid in a casualty who is resting.

c. Prevent heat exhaustion.

(1) Hydrate. Drink .5 to 1 liter with each meal. Drink .25 liters of water for every 20 minutes of strenuous exercise.
(2) Avoid overdressing for cold weather activities.
(3) Monitor your urine output – it should be clear and you should have to urinate often.
(4) Avoid diuretics – coffee, soft drinks.

Learning Step/Activity 6 – Identify, treat and prevent heat stroke (hyperthermia).

a. (Slide 14-15) What is heat stroke? Heat stroke is the opposite of hypothermia – body core temperature is elevated above 104º F. Onset of heat stroke can be sudden (less than 30 minutes). Like hypothermia, it is a medical emergency that must be dealt with immediately. Symptoms include:

(1) Altered level of consciousness.
(2) Increased heart rate.
(3) Increased respiratory rate.
(4) Hot, red skin. Skin may be wet.
(5) Loss of coordination.
(6) Seizures.

b. Perform first aid for heat stroke.

(1) Remove clothing that retains heat.
(2) Keep the patient wet while you fan the body.
(3) Apply ice packs under the armpits and in the groin area.
(4) Massage arms and legs.
(5) If possible, have the casualty hydrate; if not administer IV fluid.
(6) DO NOT under any circumstance provide drugs (OTC or otherwise).
(7) Evacuate to definitive care immediately.

c. Prevention measures are the same as for heat exhaustion.

Learning Step/Activity 7 – Identify, treat and prevent hyponatremia (water intoxication).

a. (Slide 16-17) Hyponatremia is also known as water intoxication. This results from an excess intake of water (there are other forms of this illness caused by different mechanisms). The excess water in the system causes an imbalance in electrolytes. The symptoms mimic dehydration, heat exhaustion and heat stroke making it very difficult to diagnose. Symptoms include:

(1) Headache.
(2) Weakness.
(3) Dizziness.
(4) Nausea.
(5) Sweaty skin.
(6) Clear, copious urine output.
(7) Lack of thirst.
(8) Sloshing sounds in the stomach.
(9) Altered level of consciousness in severe cases (requires evacuation).

b. Perform first aid for hyponatremia.

(1) Move to a shaded area and rest.
(2) DO NOT allow casualty to drink.
(3) Slowly allow casualty to eat (preferably salty) food.
(4) Contact medic for evaluation and evacuation.

WARNING: If treated as for heat exhaustion, serious brain injury or death can occur.

c. Prevention:

(1) Follow sensible hydration and dietary guidelines.
(2) DO NOT drink large quantities of water in a short period of time.
(3) DO NOT force subordinates to drink large quantities of water in a short period of time.

SECTION IV. SUMMARY

You should now have a good understanding of some of the more common environmental injuries that can take you and your Soldiers out of the fight. Use this information to prevent these injuries from occurring in the first place.

Check on Learning.

1. What are the common causes of CO poisoning?
Exhaust from improperly vented heaters in enclosed, un-vented shelters or vehicles.

2. How long should you boil water before using it for drinking?
It should be brought to a rolling boil in order to kill all waterborne pathogens.

SECTION II. INTRODUCTION

Motivator (Slide 1) Operations in Afghanistan routinely take place at altitudes above 8,000 feet. In addition to the complications presented by the enemy and difficult mountain terrain and weather, the lack of available oxygen at altitudes above 8,000 feet has created problems for Soldiers. At best, operating above 8,000 feet will reduce your physical and mental performance; at worst it can kill you.

Terminal Learning Objective (Slide 2)

ACTION	Protect yourself and your fellow Soldiers from altitude illness
CONDITION	You are a Soldier deployed to the field at altitudes of 8,000 to 18,000 feet. You are given the Extended Cold Weather Clothing System (ECWCS), other issued cold weather clothing items, the issued cold weather sleep system with insulating pad, access to a warming shelter, a portable hyperbaric chamber, and the requirement to protect yourself and your fellow Soldiers against altitude illness.
STANDARD	Apply preventive medicine countermeasures to prevent altitude illness. Identify the signs and symptoms of altitude illness. Perform first aid for altitude illness.

Safety Requirements: For classroom training discuss emergency procedures in case of fire or natural disaster.

Risk Assessment: Low

Environmental Considerations: None

Evaluation: You will be tested on your knowledge of cold weather and mountain medical considerations during a one hour written examination at the conclusion of the course (Refer to training schedule for date/time of exam). You must score a 70% on the written exam. If you fail the written exam, you will be given a second exam after re-training has been conducted. If you fail this second examination, you will be dismissed from the course.

Instructional Lead-in (Slide 3) Altitude illness is potentially life threatening. This lesson gives you the knowledge to prevent and treat altitude illness.

SECTION III. PRESENTATION

Learning Step/Activity 1 – Identify the factors that make altitude a hazard.

a. (Slide 4) Where does the hazard exist? Performance issues begin at altitudes as low as 4,000 feet. At this altitude, you start to breathe faster and you cannot perform aerobic exercise as well. Most serious problems with altitude do not occur until you reach an altitude of at least 8,000 feet. The U.S. Army classification system for altitude is:

(1) Low: Sea Level to 5,000 feet
(2) Moderate: 5,000 to 8,000 feet
(3) High: 8,000 to 14,000 feet
(4) Very High: 14,000 to 18,000 feet
(5) Extreme: Above 18,000 feet

b. (Slides 5 and 6) Why does the hazard exist? The higher the altitude, the lower the barometric pressure, so this means that the amount of oxygen available to you decreases. At 18,000 feet, the barometric pressure is half of what it is at sea level and there is about half the amount of oxygen available to you. When you decrease the amount of oxygen available to your body, you begin to suffer from performance issues, and possibly altitude illness. The technical term for this state of decreased oxygen in your blood stream is hypoxia.

c. Weather also has an effect on the barometric pressure. In Alaska for example, a strong low pressure system can ‘increase’ the altitude by as much as 1,000 feet even if you have not moved.

d. Higher latitudes have lower pressures than lower latitudes. This means that the available oxygen at 14,000 feet in the Alaska Range is less than the available oxygen at the same altitude in the Hindu Kush, Afghanistan.

e. In the winter, pressures are lower for a given altitude than they are in the summer months. This means that in winter there is less oxygen available to you than in summer. This effect is more pronounced at higher latitudes.

f. (Slide 7) What are four factors that affect your response to altitude?

(1) The altitude to which you ascend.
(2) Your rate of ascent to the new altitude.
(3) The altitude at which you slept before moving to the new altitude.
(4) Individual factors such as your genetic make-up and physiology.

g. (Slide 8) What happens to your body?

(1) In most cases, given enough time, you will adjust to the altitude (acclimatize). Everyone acclimatizes at different rates. In some instances, you may become ill.
(2) Your response to altitude will probably be different than that of other Soldiers.
(3) You will never acclimatize enough to perform as though you were at sea level.
(4) Your response to a given altitude this time does not predict how you will respond the next time at the same altitude.

h. (Slide 9) What happens during acclimatization? Acclimatization is your body’s physiological adjustment to altitude. There are a number of changes that take place:

(1) You breathe deeper and faster. This is an immediate response that helps you get more oxygen into your blood stream.
(2) Your heart rate and blood pressure increase initially. This allows you to carry oxygenated blood to the tissues that need it. After 7-10 days heart rate and blood pressure decrease.
(3) Your bone marrow is stimulated to produce more red blood cells. More red blood cells allow you to increase the ability of your blood to get oxygen where it is needed.

(4) You experience changes at the cellular level that allow more oxygen to get into action faster and more easily. These changes usually take weeks.
(5) 80% of overall acclimatization is complete after 10 days. At 6 weeks, 95% acclimatization is complete.
(6) You lose these gains at about the same rate. A significant loss occurs after 2 weeks. By 6 weeks the benefits of acclimatization are gone.
(7) You may experience periodic breathing (a.k.a. Cheyne-Stokes breathing) while sleeping. Your breathing rate speeds up and then stops for a few moments. You will wake up feeling like you cannot breathe. This is normal and not cause for alarm, but it may interfere with sleep.
(8) You know you have acclimatized if:
(a) You are sleeping well.
(b) You are eating well.
(c) You have a normal resting heart rate.

NOTE: An excellent tool that medics may have at their disposal is the pulse oximeter. It can read heart rate and blood oxygen saturation levels in less than a minute. Medics can get a sea-level baseline of each of the Soldiers they provide care for and monitor the health of Soldiers when conducting operations at altitude. The caveat is that a Soldier may show no signs or symptoms of altitude illness even though readings for heart rate and blood O2 are bad. These readings may be what are normal for the Soldier at a given altitude.

Learning Step Activity 2 – (Slide 10) Identify the signs and symptoms and perform first aid for altitude illness.

NOTE: The individual pictured was suffering from altitude illness during a climb of Denali. This led to a fall of over a thousand feet. The individual suffered severe injuries in the fall and frostbite while awaiting rescuers.

a. (Slide 11) **Identify Acute Mountain Sickness (AMS).** AMS is a collection of symptoms that can resemble carbon monoxide poisoning, the flu, a hangover and even hypothermia. AMS is the start of altitude illness that is associated with the brain. If you have recently moved to an altitude over 8,000 feet, you should assume that it is AMS and not something else. Signs and symptoms include:

(1) Headache.
(2) Nausea with vomiting in some cases.
(3) Loss of appetite.
(4) Insomnia.
(5) Exhaustion.
(6) Unusual fatigue.
(7) Dizziness.
(8) Shortness of breath during activity that does subside at rest.

b. (Slide 12) **Perform first aid for AMS.**

(1) Stop moving up until symptoms resolve.
(2) Hydrate and eat.
(3) Light exercise to alleviate symptoms.
(4) Take Ibuprofen and something to settle the stomach.
(5) If symptoms do not resolve in 24 to 48 hours, descend a minimum of 1,000 feet.
(6) If available, under the supervision of medical personnel, take Diamox (Acetazolamide) 125-250 mg twice daily.
(7) Contact medical personnel for further evaluation.

NOTE: Diamox is in the sulfa class of drugs. It aids in acclimatization and is often prescribed for this purpose. Side effects include increased urination (mild diuretic) and a tingling sensation in the extremities. Some individuals may be allergic to this drug.

c. (Slide 13) **Identify High Altitude Cerebral Edema (HACE).** Fluid is leaking out of the capillaries of the brain. This increases pressure inside the skull making the signs and symptoms appear similar

to those of a severe head injury. HACE is a life threatening emergency. A wait of just a few hours to treat HACE can result in death.

(1) Ataxia – inability to maintain balance, stumbling like a drunk.
(2) Altered mental status – severe changes in personality.
(3) Headache.
(4) Lethargy.
(5) Weakness.
(6) Vomiting.

Have the Soldier stand straight up (if able) with boots pressed together, eyes closed and hand pressed into the sides of the thighs. If the Soldier cannot maintain balance, he/she is suffering from ataxia and probably has HACE and not AMS.

d. (Slide 14) **Perform first aid for HACE.**

(1) Move the Soldier down a minimum of 1500 feet immediately. DO NOT WAIT.
(2) Administer oxygen and ibuprofen to help with headache.
(3) Under the supervision of a qualified medical professional, administer Diamox and/or dexamethasone (a powerful anti-inflammatory steroid).
(4) (Slide 15) Use a portable hyperbaric chamber (Gamow bag), if immediate descent is delayed. The Gamow bag is portable hyperbaric chamber. It can 'lower' the altitude by 3000-5000 feet and cause HAPE, HACE or AMS symptoms to subside for up to 12 hours though usually the effect only lasts for 3-5 hours. Still, this can allow the patient to self-evacuate to a lower altitude. Though this sounds minor, those who have operated at altitude know how difficult a medical evacuation of a litter patient without air support can be. It generally takes 2-6 hours for the symptoms of altitude illness to subside once the system is pressurized. It weighs about 15 pounds. The patient is placed inside the Gamow bag with warm clothing a sleeping bag with pad, water and an altimeter. The bag is then pressurized using a foot pump; the foot pump must be utilized at a rate defined in the instruction manual to maintain the pressure (usually around 20-30 times a minute). An altimeter is used to monitor the effective drop in altitude created by the bag.

e. (Slide 16) **Identify High Altitude Pulmonary Edema (HAPE).** Fluid leaks out of the capillaries of the lungs. This causes obvious problems with breathing. If not treated quickly, the Soldier will drown in his/her own fluids. HAPE is also a life threatening emergency.

(1) Sudden decreased ability to exercise.
(2) Dry cough progressing to productive cough with white to pink frothy sputum.
(3) Shortness of breath, even at rest.
(4) Crackling or gurgling breath sounds (rales).
(5) Increased heart rate and respiratory rate.
(6) Chest pain.

f. (Slide 17) **Perform first aid for HAPE.**

(1) Move the Soldier down a minimum of 1500 feet immediately. DO NOT WAIT.
(2) Administer oxygen.
(3) Use a portable hyperbaric chamber (Gamow bag), if immediate descent is delayed.

Learning Step/Activity 3 – Prevent altitude illness.

a. Before you go:

(1) Get fit. A key lesson learned from OEF is that "You can train a Soldier to fight in country, but if he shows up unfit, he will NEVER catch up" (from AWG personnel).
(2) Quit smoking. Another key lesson learned from OEF "Smokers habitually under-perform physically as compared to their non-smoking counterparts" (from AWG personnel).
(3) Perform long ruck movements in the mountains with your unit. This will help you to:

- Determine the slowest Soldier – you must move at that rate of march.

- Determine the overall rate of ascent and descent for your unit. 100-300m/hr is realistic.
- Get used to long, slow movements.

(4) Educate your Soldiers about how to prevent, identify and treat altitude illness.

b. During operations. For the most part, you do not have control over the acclimatization process but there are steps you can take to tip the scales in your favor.

(1) Stay put for 2-3 days if you move to an altitude of 8,000-12,000 feet.
(2) Control your rate of ascent. You can climb as high as you want (within reason), provided you do not sleep more than 1,000-1,500 feet higher than your previous location (climb high, sleep low).
(3) Drink enough water. Set a goal for at least 4 quarts of water per day. It is nearly impossible to over-hydrate at altitude.
(4) Eat a high calorie, high carbohydrate diet.
(5) DO NOT take sleeping pills or alcohol. These depress the respiratory system and can help bring altitude illness.
(6) Take Diamox as a prophylactic drug before and during your operation. One 125-250 mg tablet, twice per day is the recommended amount. You must get this prescription from a doctor.
(7) Maintain a physical fitness program.

SECTION IV. SUMMARY

You now have a general idea of the medical conditions that can develop when operating at altitudes above 8,000 feet. This knowledge will allow you to take steps to prevent altitude illness from occurring and allow you to treat altitude illness if it does occur.

Check on Learning

1. Where do most problems with altitude begin?
Most problems occur at altitudes above 8,000 feet.

2. What is the treatment for AMS?
(1) Stop moving up until symptoms resolve.
(2) Hydrate and eat.
(2) Light exercise to alleviate symptoms.
(3) Take Ibuprofen and something to settle the stomach.
(4) If symptoms do not resolve in 24 to 48 hours, descend a minimum of 1,000 feet.
(5) If available, under the supervision of medical personnel, take Diamox (Acetazolamide) 125-250 mg twice daily.
(5) Contact medical personnel for further evaluation.

3. What is HAPE? High altitude pulmonary edema. Fluid leaks out of the capillaries of the lungs. This causes obvious problems with breathing. If not treated quickly, the Soldier will drown in his/her own fluids. HAPE is a life threatening emergency.

(1) Sudden decreased ability to exercise.
(2) Dry cough progressing to productive cough with white to pink frothy sputum.
(3) Shortness of breath, even at rest.
(4) Crackling or gurgling breath sounds (rales).
(5) Increased heart rate and respiratory rate.
(6) Chest pain.

SECTION II. INTRODUCTION

Motivator: (Slide 1) In every operation, whether tactical training, combat, or operations other than war, force protection is essential to success. Historically, the U.S. Army has suffered more losses to accidents and non-battle related injuries (including fratricide) than to enemy action while deployed in combat; it appears we are our own worst enemy. Typically, these accidents are the same types experienced in peacetime, during exercises at home, and at combat training centers. If we can learn to recognize the hazards that contribute to accidents, we can avoid or reduce the risks from the hazards.

Composite Risk Management (CRM) is the Army's principle risk-reduction process to help protect the force. CRM is a decision making process used to mitigate risks associated with all hazards that have the potential to injure or kill personnel, damage or destroy equipment, or otherwise impact mission effectiveness.

Terminal Learning Objective (Slide 2)

ACTION	Apply the CRM process and principles to cold weather operations or training
CONDITION	You are a small unit leader, in a training environment, given USARAK Pamphlet 385-4, Risk Management Guide for Cold Weather Operations.
STANDARD	Apply the CRM process to given cold weather scenarios.

Safety Requirements: For classroom training discuss emergency procedures in case of fire or natural disaster.

Risk Assessment: Low for classroom instruction. For field training during the remainder of the course risk level will be determined by the squad instructor based upon the current conditions.

Environmental Considerations: None

Evaluation: You will conduct two practical exercises during this lesson. You are also expected to conduct a thorough risk assessment prior to each outdoor training event. If you fail to conduct two risk assessments you may be removed from training as a safety risk (NWTC Commander's discretion).

Instructional Lead-In: Composite Risk Management (CRM) is everyone's responsibility. The NWTC has produced a pocket guide to allow you to integrate CRM into the planning and execution of any operation, training or off-duty activity. This block of instruction will introduce you to the CRM process and provide instruction on the use of USARAK Pamphlet 385-4, Risk Management Guide for Cold Weather Operations. During this course, you will have repeated opportunities to use the guide and the CRM process as you learn about the hazards associated with cold weather operations and the tactics, techniques and procedures to reduce or eliminate these hazards. By the time you leave this course, CRM should be second nature to you.

SECTION III. PRESENTATION

Learning Step/Activity 1- (Slide 3) Identify the principles of Composite Risk Management (CRM).

a. CRM is a decision making process used to mitigate risks associated with all hazards that have the potential to injure or kill personnel, damage or destroy equipment, or otherwise impact mission effectiveness. The guiding principles of CRM are as follows:

(1) Integrate CRM into all phases of missions and operations.
(2) Make risk decisions at the appropriate level. CRM is only effective when the information is passed to the appropriate level of command for decision. Approval authority for risk decision making is based on guidance from higher HQ.
(3) Accept no unnecessary risk.
(4) Apply the CRM process cyclically and continuously.
(5) Do not be risk averse. Identify and control hazards- then complete the mission.

Learning Step/Activity 2 – (Slide 4) Identify the five steps of the CRM process.

a. The composite risk management process is a five step process used to identify and control hazards; risk management applies to any mission and any environment.

(1) Identify the hazards.
(2) Assess hazards.
(3) Develop controls and make risk decisions.
(4) Implement controls.
(5) Supervise and evaluate.

b. NOTE: (Slide 5) Orient students to the contents of the pamphlet. USARAK Pamphlet 385-4, Risk Management Guide for Cold Weather Operations is a pocket guide for CRM that you can use for cold weather training and operations.

Learning Step/Activity 3 – (Slide 6) – Identify and assess hazards.

a. METT-TC provides the framework to identify hazards. In a garrison or off-duty environment consider:

(1) Activity (Mission)
(2) Disrupters (Enemy)
(3) Terrain and Weather
(4) People (Troops)
(5) Time
(6) Legal considerations (Civil Considerations)

b. You can also use regulations, accident data, AARs, experience, subject matter experts, training assessments, war-gaming, what-if scenarios, or risk assessment matrices.

c. (Slide 7) Risk levels are low, moderate, high or extremely high. In a moment we will use the Risk Assessment Matrix for Cold Weather Operations to come up with a score that corresponds to risk level. After using the RA Matrix, use this table to determine the risk level for the mission or training you will be conducting.

d. (Slide 8) Use the risk assessment matrix and worksheet on pages 7-8 to identify and assess hazards and get an overall initial risk level for the mission or activity. This matrix allows you to compare different elements of METT-TC and come up with a numerical value that you can equate to a risk level. Look at each element of the matrix in detail:

(1) Planning: Compare the amount of time you have to prepare vs. the type of guidance you receive. Circle the corresponding number and write the score in the upper right hand corner. Do the same with each remaining element.

(2) Command and Control: Compare the type of event with the task organization of the unit performing the mission.
(3) Terrain: Compare the trafficability with the type of terrain.
(4) Weather: Compare the exposure duration to the temperature (consider wind chill).
(5) Soldier Endurance: Consider the preparedness of your Soldiers vs. the amount of time your soldiers have spent operating in the environment.
(6) Soldier Selection: Compare the level of experience of the Soldiers to the type of task that they will be conducting.
(7) Rest and Maintenance: Compare the equipment status and how well rested you and your Soldiers are.

e. (Slide 9) Record all of this information on the risk assessment worksheet and determine the initial risk level. Add the scores up and use the table to determine the initial risk level. You can have a cumulative score that gives you a low or moderate risk level, but if you have a single element that is high or extremely high, the initial risk level defaults to that higher level.

Individual Area	**1,2**	**3,4**	**5,6**	**7,8,9**
Risk Level	**Low risk**	**Moderate Risk**	**High Risk**	**Extremely High Risk**
Cumulative Score	**7 to 12**	**13 to 23**	**24 to 35**	**36 to 40**

Learning Step/Activity 4 – (Slide 10) Develop controls and make risk decisions.

a. Address WHO, WHAT, WHEN, WHERE and HOW.

(1) Use USARAK Pam 385-4, Appendix A: Planning Considerations for Cold Weather Training and Operations to help you develop controls.

(2) Use the example worksheets in Section II of USARAK 385-4. These show you generic examples of some of the training events you will conduct in this course.

b. Reassess the risk after controls are in place.

c. Involve the appropriate level of command based upon the residual risk level. Approval authority guidance is found in USARAK Regulation 350-1.

Risk Level	**Low**	**Moderate**	**High**	**Extremely High**
Who can approve the mission or activity?	**Company Commander**	**Battalion Commander**	**Brigade Commander**	**Commanding General**

Learning Step/Activity 6 – (Slide 11) Implement controls.

a. Ensure controls are converted into clear and simple execution orders.

b. Controls must be understood by all personnel.

Learning Step/Activity 7 – (Slide 12) Supervise and Evaluate.

a. Implement and enforce risk controls to standard. Designate the personnel who will supervise and evaluate controls.

b. Supervise the process – this is also a control measure – DO NOT EXPECT WHAT YOU DO NOT INSPECT.

c. Evaluate and make adjustments as necessary.

Learning Step/Activity 8 – (Slides 12-14) Identify and assess the hazards and determine the initial risk level for this scenario. Record your results in the risk assessment matrix and worksheet. Be prepared to brief your results. You have ten minutes.

You are a light infantry rifle platoon leader with a full strength platoon. You have just been tasked by your company commander to prepare your Soldiers for an OPFOR mission and have been provided with a detailed MOI. In 72 hours, you will depart by vehicle for training area 4A and prepare a hasty defense. Area 4A is generally flat with moderate to heavy forests typical of the terrain surrounding your post, Ft. Freezmo, AK. Upon arrival you will have 12 hours to prepare positions. You will be required to occupy the positions with 1/3 of your Soldiers at all times. You will not be allowed to have any warming fires or stoves at the positions. Alpha company will conduct an assault on your position at 0800 hours the following day. After Alpha Company seizes the objective, vehicles will arrive to move everyone back to garrison. The AAR will be conducted in the rear. It is November 18th and currently snowing hard at a temperature of about 26°F. In two days the weather is expected to clear, with temperatures falling to between -30° and -40° for the first time this year. You have served as 1st platoon leader since last April, however this will be your first winter exercise. All of your squad leaders and the platoon sergeant have served at least one previous winter in the unit, though only one was in 1st platoon last winter. One third of your Soldiers are relatively new and have not experienced a winter training cycle, however they all have received classroom instruction on prevention of cold weather injuries and maintenance of equipment in the cold. The remainder of your Soldiers either served in the platoon the previous winter or have received winter training at their previous unit. This past week, you conducted an inventory of your winter equipment (ahkio groups, snowshoes, etc.) and everything appears to be in order. You have three full days to prepare for the task.

Learning Step/Activity 9 – (Slides 15-17) Apply the CRM process to this scenario. Record your results on DA Form 7566, Composite Risk Management Worksheet. Be prepared to brief your results. You have 15 minutes.

You are the commander of B Company, 2/287 IN and are currently participating in Operation Arctic Warlord, a major NATO winter exercise in northern Norway designed to measure your unit's war fighting capabilities on a cold, snow covered battlefield. Your company completed a forced ski march about 6 hrs. ago and is now finishing up the last maintenance tasks for the day. The troops did very well on the march, arriving in the new area of operation a full hour ahead of the rest of the battalion. It appears your pre-exercise training back at Ft. Freezmo has paid off. Your Soldiers have been eating and drinking well, but some appear to be a little run down from the march. It is now 2030 hrs. At 2300 (about two hours after racking out) you are wakened by the S-3 and told B Company must be prepared to move out at 0900. You have been tasked to help 1st Battalion secure an airfield 3 km away. He gives you a brief order defining the situation. You will depart on snowshoes and move cross country linking up with 1st Battalion just south of the airfield. From there you will take all orders from the 1st Battalion commander until you are relieved by another unit the following day. You must provide your own food, ammo, and other mission essentials, however your ahkios will be sent forward by SUSV later in the day. Though you don't relish the tasking, you know your Soldiers have been eager to prove themselves during the exercise and will handle the mission well. You are fortunate that B Company is full of highly qualified, cold weather warriors who have been training in these -20° to -30°F temperatures since the beginning of last month. You decide the troops can sleep until 0500; 4 hours will be sufficient time to prepare for the mission. The temperature is expected to rise about 20 degrees by morning; however the winds are also expected to pick up within the next six hours, gusting up to 20 mph. The terrain from your present location to the airfield is relatively flat with barren ground and very few trees.

SECTION IV. SUMMARY (Slides 18-19)

You are required to develop a written risk assessment for all outdoor related training for the rest of this course. You may be called upon by your squad instructor to brief this risk assessment to the squad. This will get you into the habit of assessing risk for all training and operations.

Check on Learning.

1. What are the five steps to the risk management process?

   (1) Identify the hazards.
   (2) Assess hazards.
   (3) Develop controls and make risk decisions.
   (4) Implement controls.
   (5) Supervise and evaluate.

2. For a HIGH risk operation, who must approve the mission?

Brigade Commander

SECTION II. INTRODUCTION

Motivator: During the Russo Finnish war of 1939-1940 the Finns were vastly outmanned and outgunned. Battalions were led by Captains, Divisions sometimes led by Colonels. Their artillery was from the previous century. They had a very small and outdated air force. The Russians threw 26 Divisions at a force of just 9 Finnish Divisions. Besides fighting on their home ground the Finns had a major advantage over the Russians: they could move on the snow and could live in it. The Finn army was free to maneuver where and when it pleased because they were on skis and did not depend on vehicles to move them or their supplies. They allowed the Russians to have the road network, while building their own trails through the forest. The Russians depended on trucks and horses while the Finns used sleds and native reindeer. The Finns would ski 20-30 kilometers a night to encircle and cutoff the Russians. In one battle, Suomussalmi, two Russian divisions totaling more than 48,000 men and 100 tanks were destroyed in detail by a Finn force of less than 17,000 with no tanks. In the end the Russians won only by sheer numbers and still only took less than half of Finland. One Russian General was quoted as saying"… we have won enough ground to bury our dead…"

Planning Considerations for Over Snow Movement

Terminal Learning Objective (Slide 2)

ACTION	Plan for over snow movement
CONDITION	You are a small unit leader, given the requirement to move your unit over snow covered terrain.
STANDARD	Plan a 5km over snow movement for a squad sized element with a solution plus or minus one hour.

Safety Requirements: For classroom training discuss emergency procedures in case of fire or natural disaster.

Risk Assessment: Low for classroom instruction. For field training during the remainder of the course risk level will be determined by the squad instructor based upon the current conditions.

Environmental Considerations: None

Evaluation: You will be tested on your knowledge of planning considerations for over snow movement during a one hour written examination at the conclusion of the course (Refer to training schedule for date/time of exam). You must score a 70% on the written exam. If you fail the written exam, you will be given a second exam after re-training has been conducted. If you fail this second examination, you will be dismissed from the course. In addition to the written test, you will conduct a written practical exercise.

Instructional Lead-In: This lesson will give you some basic planning considerations for moving small units over snow covered terrain.

SECTION III. PRESENTATION

Learning step/Activity 1 - Identify the advantages / disadvantages of wheeled, tracked, and over-snow vehicles for movement over deep snow or steep terrain.

a. (Slide 3) There are several different modes of travel on snow. Over the next few slides we will discuss a few. The most preferred method of movement in a snow covered environment is a helicopter. However air mobility has its limitations, one of those being maintenance. It also suffers from periods of reduced visibility due to the lack of daylight and blizzard conditions associated with this type of environment. Altitude will also lessen the capability of helicopters. Troop compartments in aircraft should be kept cool to prevent Soldiers dressed for cold weather operations from sweating profusely during air movements.

b. (Slide 4) Another method of travel is wheeled vehicles. Wheeled vehicles have their drawbacks due to maintenance and their severe inability to move off-road. In Alaska there are only about 14,000 miles of roads, of these 2,500 are paved and in the winter only about 60% are passable. These conditions are similar in other cold regions throughout the world.

c. (Slide 5) An alternative type of transportation, is the snow machine. It can travel over almost any type of snow covered terrain. The drawback to a snow machine is the number of personnel it can carry. It is best suited to scout units and re-supply operations. It can skijor up to 3 personnel. Planning radius of a snow machine is approximately 40 miles.

d. (Slide 6) The last type of transportation for maneuver elements is the M973 Small Unit Support Vehicle (SUSV).Being a tracked vehicle it will go places that wheeled vehicles will not. The SUSV is commonly used in support of maneuver elements due to its lack of armor. The SUSV can move 180 miles on a full tank of fuel. It can carry up to 13 soldiers depending on the configuration of the front compartment. The SUSV can also skijor up to 30 personnel depending on the length of rope in use.

M973 Small Unit Support Vehicle

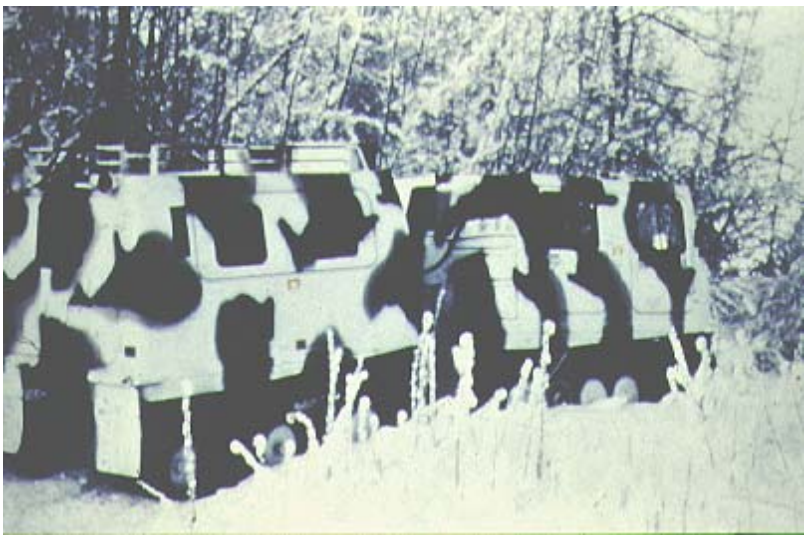

Learning step/Activity 2 - Identify the advantages/disadvantages of snow-shoeing, skiing, sled (ahkio) hauling, and skijoring.

a. (Slide 7) All motorized transportation has limitations. Individual over snow movement techniques are the most reliable form of transportation in cold regions. You should understand the three major individual movement techniques (skiing, snowshoeing and skijoring), the planning considerations for each of them, and the advantages and disadvantages of each. Later in the course you will have the opportunity to develop each of these techniques. This will allow you to develop a training plan at your unit that will allow you to meet training objectives in the field. For infantry soldiers, snowshoeing should be considered the minimum skill that all soldiers in the unit posses.

Individual Movement Techniques

- ***Skiing***
- ***Snowshoeing***
- ***Skijoring***

b. Skiing. (Slide 8) Skiing is harder to learn than snowshoeing but requires less work when mastered. You don't need to pick your feet up or walk with your legs farther apart than normal. Even on flat or moderate uphill sections, a properly trained skier soldier will be able to glide; on downhill sections the soldier will have very little physical work to do.

Use Skis When...

- ***Long distances must be traveled***
- ***Stealth is necessary***
- ***Conditions allow***

c. (Slide 9&10) This is an overview of what you will learn later in the course and this is the training that you should provide to your Soldiers. These lessons have been adapted from the PSIA manual. They are a guideline for you to provide training to your soldiers, should you determine that ski techniques are needed for your unit. As an alternative, the cross country techniques can be taught to soldiers and utilized for physical training during the winter months. This puts soldiers outdoors during the winter months for PT and additionally teaches them to deal with the cold and trust their cold weather clothing and equipment.

Military Skiing

Military skiing:

- ***is generally done on flat or rolling terrain that requires the use of cross-country (Nordic) skills.***
- ***may require skiing down steep slopes using downhill (Alpine) skills.***
- ***presents a major training challenge because of the time it takes to train Soldiers to be proficient on skis.***
- ***is divided into seven ski lessons.***
- ***is an excellent alternative means of conducting physical training in winter***
- ***is an excellent means to giving Soldiers practical experience dealing with the cold weather environment***

Military Ski Lessons

Ski Lesson 1: Nomenclature, Maintenance, Fitting, Introduction to Movement on Skis

Ski Lesson 2: Hill Climbing and Gentle Descents

Ski Lesson 3: Basic Cross-Country

Ski Lesson 4: Wedge Turns; Intermediate Cross-Country

Ski Lesson 5: Basic Nordic Downhill

Ski Lesson 6: Intermediate Nordic Downhill, and Advanced Cross-Country

Ski Lesson 7: Advanced Nordic Downhill

d. Skijoring. (Slide 11&12) Skijoring is a method of pulling individuals on skis with a snow machine or SUSV. It takes very little energy to hold onto the rope and be pulled along. Skijoring by SUSV can move up to 30 soldiers at a time. ENSURE ALL EXPOSED SKIN IS COVERED! Things to remember – Just because a soldier has had 40 hours of ski training, does not mean he/she should be allowed to skijor – there still may be soldiers that are not proficient enough to attempt skijoring. During training events, a written risk assessment is mandatory.

Skijoring

- ***is a technique that uses a vehicle to tow skiers***
- ***requires a minimum of 40 hours of ski training prior to skijoring; Soldier must be proficient on skis***
- ***requires a written risk assessment by the commander***
- ***generally uses SUSV or snow machine***
- ***vehicle speed is limited to 15 miles per hour***
- ***all skin must be covered; goggles are required***
- ***for SUSV, a spotter is used to observe skijoring personnel***
- ***spotter must have communication with driver***

e. Snowshoeing (Slide 13) Snowshoeing is easy to learn, however snowshoeing requires more physical effort than skiing or skijoring. Snowshoeing still requires less effort than post holing without any flotation in deep snow. When you walk on snowshoes you have to pick your feet up and walk with your legs farther apart than normal due to the width of the snowshoe. Because of their size snowshoes are easier to maneuver through heavy brush. Their ease of use also makes them better suited for rough terrain.

Use Snowshoes When...

- ***Moving through heavy brush***
- ***Terrain is rough***
- ***Troops are not proficient with skis***

f. (Slide 14) This is an overview of snowshoe training. Hands on training is provided later in the course.

Snowshoeing

Have soldiers move over snow covered terrain:

- ***The feet are kept apart slightly wider than normal to prevent stepping on or catching the other snowshoe.***
- ***The toe of the snowshoe is raised just high enough with each step to clear the snow as the tail slides over it.***
- ***On flat and gentle slopes ascent is made by climbing straight uphill***
- ***Steeper terrain is ascended by traversing and packing a level trail similar to a creating a shelf across it.***
- ***Ski poles may be used as an aid to balance, especially when carrying heavy loads and/or moving uphill.***
- ***Movements***
  - ***Walking***
  - ***Step turn***
  - ***Kick turn***
  - ***Negotiate obstacles***

Learning Step/Activity 3 - Identify route planning considerations for over snow movement.

a. General considerations. (Slide 15) In addition to the normal considerations regarding the tactical situation leaders must take into account the following when selecting a route across cold/snow-covered terrain:

(1) Conduct a map reconnaissance. Going around terrain features may be faster than going over them; check the contour, and select a route which involves the minimum amount of ascending and descending.
(2) Are your personnel on skis or snowshoes? How proficient are they, and are they more capable of negotiating the terrain along the route with one or the other?
(3) Will your soldiers be carrying heavy rucksacks or pulling sleds? What will the temperatures be during movement?
(4) Do you have any vehicles attached, and if so, what type of terrain/snow depth are they capable of negotiating?
(5) How will you camouflage your tracks? Do you need to? In barren areas, or areas above the tree line tracks may be difficult if not impossible to conceal.
(6) Will the route be feasible during conditions of limited visibility?
(7) Will the route cross any potential avalanche areas?
(8) What obstacles can be anticipated? Will streams and other bodies of water be sufficiently frozen to support troops/vehicles? Will plowed roads perpendicular to your route have high banks of plowed snow? Will the water level in streams be so low that your soldiers will have to negotiate high banks?

Route Planning Considerations

In addition to the tactical situation consider:

- ***Map recon for route selection; feasibility of route during limited visibility***
- ***Movement technique (skis, snowshoe, foot)***
- ***Soldiers Load***
- ***Use of vehicles***
- ***Terrain and Weather***

b. Open terrain. (Slide 16) In open terrain you want to break only one set of tracks. Aircraft flying over can more easily spot several tracks than they can a single set of tracks. Follow the tree line as much as possible, this will aid in concealment from the ground as well as help hide your tracks from the air.

Route Planning Considerations: Open Terrain

- ***Break only one set of tracks***
- ***Follow tree lines/natural terrain features***

c. Hill or mountain terrain. (Slide 17) When negotiating hills or mountains use gentle traverses to ascend or descend. This makes it less fatiguing on your soldiers so they will be able to fight when they reach the objective. As far as avalanche prone slopes are concerned avoid them at all costs. Very specialized training is required to even come close to negotiating them safely. During the avalanche awareness class you will learn some warning signs to be aware of in snow covered mountainous terrain.

Route Planning Considerations: Hills / Mountains

- ***Use gentle traverse to ascend or descend***
- ***Follow contours once elevation is gained***
- ***Avalanche considerations***

d. Water routes. (Slide 18) Water routes are generally excellent for navigation. They can be superb avenues for movement during freeze-up. However you must physically check the ice thickness by cutting a hole and measuring it. When you move on water routes treat them as an open area and stay close to the shore. Again this will help to conceal you and your tracks. Overflow is a condition common to most bodies of water where the water flows onto the ice.

Route Planning Considerations: Water Routes

- ***Generally excellent for navigation***
- ***Check ice thickness***
- ***Stay close to shore or bank***
- ***Overflow***

e. (Slide 19) This chart show ice depth thickness required for different modes of travel.

Note: Rule of thumb for armored vehicles: 16 inches of waterborne ice support 16 tons, and each additional inch supports one additional ton. This does not apply for ice thicknesses under 16 inches. For example three inches of ice will not support three tons.

If ice is not supported by water (waterborne) because the water level has dropped, it will be too weak to support heavy loads.

In temperatures above 14º F, add 25% to all required ice thickness'.

Load Bearing Capacity of Fresh Water Ice

Minimum Ice Thickness (Waterborne)			
Load	***Minimum One Time Only***	***Normal Repeated Use***	***Distance Between Units***
Soldier on skis	**1.5 inches**	**2 inches**	**5 meters**
Soldier on foot	**3 inches**	**4 inches**	**5 meters**
¼ ton truck	**5 inches**	**8 inches**	**16 meters**
HMMV	**10 inches**	**13 inches**	**27 meters**
SUSV	**10 inches**	**13 inches**	**27 meters**
UH-60/CH-47	**15 inches**	**18 inches**	**80 meters**

f. Night movements. (Slide 20) Almost everybody has conducted some sort of night movement. You all know about breaks in contact and how long it can take to regain contact and continue movement. In temperate regions this is usually an annoyance that slows movement. In the cold weather environment, long halts can produce cold weather injuries. Due to this fact, the route should follow the easiest terrain possible. The route should also be well marked and guides placed where appropriate. Maximize the use of reconnaissance teams and well defined travel lanes and checkpoints. Reconnaissance teams may also be tasked to put up heated shelters along longer routes.

Route Planning Considerations: Night Movement

- ***Breaks in contact and long halts can cause cold weather injuries***
- ***Route must follow easiest possible terrain***
- ***Route must be well marked***

Learning Step/Activity-4 Identify trail breaking procedures.

a. (Slide 21)

Trail breaking on skis/snowshoes

- ***can take considerable effort; personnel must be rotated out frequently***
- ***second Soldier does not step in leaders footprints; helps flatten trail***
- ***third and fourth Soldiers help widen trail by off-setting left and right***

Learning Step/Activity 5 - Plan movement rates over snow covered terrain.

(Slide 24)

Planning Rates of March

a. Planning rates of movement

(1) (Slide 25) The normal planning rate for troops on hard packed, gently rolling terrain is 4 km per hour. When you add snow or hilly terrain in there is a formula to help you judge the rate of march.

(2) You will notice looking at this table that the movement rate of foot with less than 1 foot of snow is the same as on snowshoes with more than 1 foot of snow. What this means is unless you have more than 1 foot of snow snowshoes are not necessary. You will also notice that skis are shown to be faster than snowshoes, this is due to the fact that they require less work to use. Finally skijoring doesn't show a time for an unbroken trail, this is because you are behind a vehicle and it is breaking trail for you.

Movement Mode and Speed

Movement Mode	*Unbroken Trail*	*Broken Trail*
On foot- less than one foot of snow	1.5 to 3 kph	2 to 3 kph
On foot- more than one foot of snow	.5 to 1 kph	2 to 3 kph
Snow Shoeing	1.5 to 3 kph	3 to 4 kph
Skiing	1.5 to 5 kph	5 to 6 kph
Skijoring	N/A	8 to 24 kph

(expected rates of march for troops carrying rucksacks over gently rolling terrain)

(3) (Slide 26) Now let's take a look at the effects of terrain on movement. When you gain elevation you must add 1 hour for every 1000ft you move up. This takes into account the extra time required to traverse and the more frequent halts that will be required. Moving downhill you will have to add 1 hour for every 1600ft you move. This is generally accepted for foot or snowshoe movement; proficient skiers will take significantly less time to move downhill. More injuries occur descending than ascending. These injuries are normally lower leg injuries.

Effects of Terrain Angle on Speed

Uphill-

Add 1 hour for every 1000 foot increase in elevation

Downhill-

Add 1 hour for every 1600 foot decrease in elevation

(4) (Slide 27) Use the information presented above to plan your movement:

NOTE: Give students about 10 minutes to plan.

Practical Exercise

Your mission is to conduct a deliberate attack. The distance from your LD to assault position is 5 km.

Your route follows a unbroken trail crossing two ridge lines. The first is 550 feet above the surrounding terrain; the second is 450 feet.

There are 18 inches of snow on the ground. Your troops are proficient on snow shoes but not on skis.

(Slide 28) NOTE: This slide is for use during the exercise.

Movement Mode	Unbroken Trail	Broken Trail
On foot- less than one foot of snow	1.5 to 3 kph	2 to 3 kph
On foot- more than one foot of snow	.5 to 1 kph	2 to 3 kph
Snow Shoeing	1.5 to 3 kph	3 to 4 kph
Skiing	1.5 to 5 kph	5 to 6 kph
Skijoring	N/A	8 to 24 kph

Uphill – add 1 hour for every 1000 foot increase in elevation

Downhill – add 1 hour for every 1600 foot decrease in elevation

(5) (Slide 29) PE solution

- Terrain Effect:
  - You ascend a total of 1,000 feet so add one hour.
  - You descend 1,000 feet so add 40 minutes.
  - This gives you a total time of 1 hr and 40 minutes just for the terrain effects.

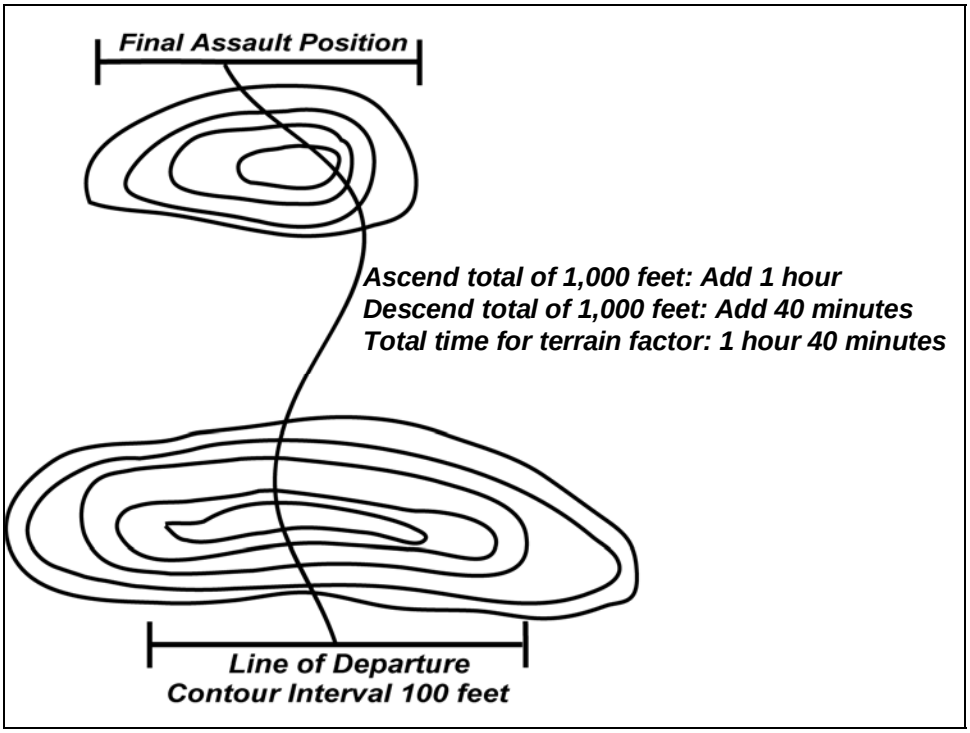

(Slide 30) We used a planning figure of 1.5km per hour. This gives a total of 3 hours and 20 minutes for the 5km. Add the time for the 5km, (3 hours 20 minutes) to the time for terrain effects (1 hour 40 minutes) this gives you a total time of 5 hours to move 5 km, whereas on hard packed, gentle terrain it would have taken 1 hour 15 minutes.

PE Solution

- **5K on 18 inches of new snow on snowshoes**
  3 hours and 20 minutes (1.5km/hr) +

- **"Terrain factor" - (effect of hills)**
  1 hour and 40 minutes

  = 5 hours

SECTION IV. SUMMARY (Slide 31)

You now know how to plan a unit movement over snow. You will conduct several over snow movements during the remainder of this course using the techniques described in this presentation. This will assist you with planning and execution of training at your unit.

Check on Learning.

1. Which is more efficient skis or snowshoes?
Skis are more efficient as long as the soldier is proficient.

2. Which is easier to learn skis or snowshoes?
Snowshoes are easier to learn.

SECTION II. INTRODUCTION

Motivator: One of the keys to successful operations in a snow-covered environment is mobility. This has been proven many times on the battlefields of Europe and Korea. Some vehicles have been designed to operate on snow-covered terrain and air mobile operations offer a big advantage. The means of mobility, however, is limited by terrain and weather. Specialized vehicles and air support will not always be available to you. In a short period of time, you can learn to use snowshoes to efficiently move over snow covered terrain.

Terminal Learning Objective

ACTION	Move over snow on snowshoes
CONDITION	Given the military snowshoe with bindings, ski poles and vapor barrier boots, rucksack (with a minimum load of sleeping bag, sleeping pad, extra pair of socks, extra pair of mitten inserts, additional packing list items may be prescribed by unit), ECWCS, other issued cold weather clothing items, ballistic helmet, LCE with 2 quarts of water, weapon and a 10 kilometer snow-covered course with varied terrain.
STANDARD	Complete a 10 kilometer snowshoe biathlon. Meet all critical performance measures IAW the student evaluation plan.

Safety Requirements: Ensure that students are properly dressed and equipped prior to conduct of training. Squad leader will conduct a risk assessment with students based upon the current conditions. Squad leader will assign buddy teams to watch for cold weather injuries. Squad leader is responsible for taking breaks in warming shelters as required.

Risk Assessment: Dependent upon current conditions. Squad instructor will conduct a thorough risk assessment prior to any field training.

Environmental Considerations: None

Evaluation: You will be tested on your ability to negotiate a 10 kilometer snowshoe course. There is no time limit to complete this exercise. You must complete a 10km snowshoe movement IAW the Student Evaluation Plan. You will also be tested on your knowledge of snowshoe movements during a one hour written examination at the conclusion of the course (Refer to training schedule for date/time of exam). You must score a 70% on the written exam. If you fail the written exam, you will be given a second exam after re-training has been conducted. If you fail this second examination, you will be dismissed from the course.

Instructional Lead-In: During this period of instruction you will learn the nomenclature, maintenance and fitting of your snowshoes. Once your snowshoes are fitted you will learn the techniques to use them in varied snow covered terrain.

SECTION III. PRESENTATION

Learning Step Activity 1 – Maintain and fit the military magnesium snowshoe.

a. Nomenclature of the Military Magnesium Snowshoe.

(1) The Magnesium Snowshoe is light and durable. It provides excellent flotation in dry snow and/or with heavy loads. They are approximately 48" long and 12" wide and weigh 4.8 pounds.

Military Snowshoe

1. Shovel
2. Nylon Coated Steel Cable (Deck)
3. Cleats
4. Tail
5. Window
6. Toe Strap
7. Heel Strap

(2) Shovel. Upward curved portion of the frame that helps keep the snowshoe on the surface of the snow.
(3) Nylon coated steel cable (deck). Steel cable woven and threaded through the frame. Load bearing portion of the snowshoe that provides flotation.
(4) Cleats. Protrusions on the outer frame that provide grip on hard snow.
(5) Tail. Tapered portion of the frame and deck that aids in making the snowshoe track in a straight line.
(6) Window. Opening in the deck that allows the toe of the boot to pivot in a natural motion whilst walking.
(7) Toe strap. Holds the snowshoe on the toe of the boot. Made of sewn nylon webbing with an adjustable buckle.
(8) Heel strap. Holds the snowshoe onto the heel of the boot. Made of sewn nylon webbing with three adjustable buckles, one around the ankle and two along the sides of the foot.

b. Maintain the Military Magnesium Snowshoe.

(1) Check nylon webbing (heel and toe straps) for any rips tears, or blown buckles. Replace from unit stocks as necessary. Clean with a soft brush in warm soapy water and let air dry.

(2) Check the frame for cracks or breaks. If the tail welds break an expedient repair can be made with parachute cord or tape. A more long term solution is to drill holes through the tail and secure with screws. For a break in the frame on the sides a tent stake or like object can be affixed to splint the break. Ultimately this snowshoe will need to be replaced.

(3) Check the deck for broken cables. Expedient repairs can be made by tying off the loose cable and rethreading the broken portion with parachute cord. This snowshoe will ultimately need to be replaced.

(4) Cleats can be filed to make them sharper to provide more traction.

(5) Remove dirt and foreign objects.

(6) The whole shoe can be painted white as necessary.

c. Fit the Military Magnesium Snowshoe.

(1) Begin with all straps removed.

(2) Put on toe straps.

- Place a toe strap just below the window of one snowshoe.
- Place the running end of the toe strap through the deck cables directly below and in line with the side of the window.
- Pass the running end through the webbing underneath the toe strap.
- Place the running end through the deck cables directly below and in line with the other side of the window.
- Pass the running end through the alligator clip. The point of the adjustment buckle points to what is now the outside of the snowshoe.
- Repeat the procedure for the other snowshoe. Ensure the point of the adjustment buckle points in the opposite direction as the first snowshoe. This allows you to determine your left and right snowshoes.

(3) Put on heel straps.

- Lay the heel strap so the lateral running ends point towards the shovel. The sewn instep strap should be down.
- On the same line as the toe strap, weave one lateral running end down through the deck cable as close to the frame as possible.
- Bring the running end up through the deck and through the adjustment buckle leaving it loose.
- Repeat for this procedure with the other lateral running end.
- Repeat this procedure for the other snowshoe.

(4) Fit the boot to the snowshoe:

- Place your boot on the deck.
- Put the toe of the boot no more than ½ to 2/3 of the way into the window.
- Pull the toe strap over the boot and tighten the strap. The point of the strap points to the outside of the boot.
- Pull the heel strap up over the tab in the rear of the boot. Secure the ankle strap.
- Pull the two lateral straps so that equal tension is on the boot. Rotate the boot up to ensure the toe is not rubbing on the frame.
- Repeat this procedure with the other boot.

NOTE: For smaller boots the strap can be run through the oval rings, back through the deck then through the buckles. Secure excess straps.

Learning Step/ Activity 2 - Fit and maintain the MSR Military snowshoe.

The MSR Military Snowshoe is light and durable. It will provide you with flotation in snow. The snowshoes consist of a hard plastic deck with steel crampons and bars to aid in traction. They are approximately 22" long and 8" wide, without flotation tails, and weigh approximately 3 lbs 10 oz. To order these snowshoes contact MSR at www.msrgear.com . Ask for government sales and the MSR military snowshoe with 8 inch flotation tails.

a. Nomenclature of the MSR Military Snowshoe.

(1) Shovel- the upturned front portion of the snowshoe designed to help it ride toward the surface of the snow.

(2) Window- opening of the snowshoe there to allow the toe of the boot to enter through for added traction and give the user natural movement of the feet while walking.

(3) Deck- Middle flat portion of the snow shoe.

(4) Bindings- allow for the attachment of the snowshoes to the boot.

(5) Tail- elongated rear of the snowshoe designed so that the snowshoe will track in a straight line while walking.

(6) Crampon- Metal structure under deck, directly under boot, that aids in traction on ice and hard-packed snow.

(7) Steel Bars- Serrated edges run the length of the shoe on both sides that aid in traction on ice and hard-packed snow.

(8) Flotation Tails- Detachable additional decking at rear of snowshoe that provides greater flotation for powder snow or heavier weight.

(9) Elevator Tabs- Metal bars that raise the wearer’s heel to decrease the angle of the wearer’s foot when climbing steep terrain.

b. Fit the MSR military snowshoe.

(1) Lay the snowshoes on the ground. The running end of the heel strap should be to the outside of your foot.

(2) Place one boot underneath the toe straps until the front of the boot is no more than ½ to 2/3 into the window.

(3) Starting with the front toe strap, tighten each toe strap until it is snug against the boot. Take care not to cut off circulation or over-tighten to the point that the strap breaks.

(4) Secure the heel strap to your boot, just above the heel lug. The running end of the heel strap should be on the outside of your boot to prevent you from tripping over it.

(5) Repeat with the other snowshoe.

Learning Step/Activity 3 – Move on snowshoes.

a. On flat or rolling terrain:

(1) Walk with your feet apart slightly wider than normal to prevent stepping on or catching the other snowshoe.

(2) Raise the toe of the snowshoe just high enough with each step to clear the snow as the tail slides over it.

b. On gentle slopes climb straight up hill or descend directly downhill.

c. On steep terrain, ascend by traversing. Try to pack a level trail as you traverse the slope. You can descend steep terrain using the same technique or you can move directly down the slope.

d. To change directions you can:

(1) Make a ***step turn***. Simply move the outside snowshoe a few inches towards the desired direction of travel. Then move the other snowshoe until it is parallel to the one you first moved. Continue the process until you are facing the desired direction of travel.

(2) Make a ***kick turn***. Use kick turns to turn around in tight or steep terrain:

- Lift one foot and place the tail vertically on the ground next to the window of the stationary shoe.
- Maintaining balance, allow the snowshoe to fall backwards so the feet are pointing in opposite directions. Do not place the snowshoes on top of each other.
- Bring the other snowshoe around and place next to the first one.

e. Additional considerations.

(1) Use ski poles as an aid to balance, especially when carrying heavy loads and/or moving uphill.

(2) Try to step over obstacles. Place the snowshoes parallel to the obstacle and straddle it one leg at a time. If a large obstacle cannot be avoided step directly on it with as much contact as possible.

(3) Do not try to bridge depressions with the snow shoe as it will place undue stress on the frame and may break it.

(4) MSR military snowshoe is suited for most conditions. It does not provide as much flotation as the magnesium snowshoe especially if you are carrying a heavy load. The magnesium snowshoe provides better flotation in deep, dry snow, but provides less traction for movement up and down hills. In all cases, the first individual will break a trail and will work harder than those behind him. For this reason you must rotate trail breakers.

(5) Carrying a weapon. Attach the sling to the rear sling swivel and the slip ring (where the hand guards attach to the receiver). Hang the weapon over your neck and firing side shoulder, muzzle down. The weapon can be placed behind the canteen on the firing side hip to keep it out of the way while using ski poles. Or attach the sling at the slip ring and the small of the butt stock and hang in the same manner. Another method is by use of a “three point sling” available commercially.

SECTION IV. SUMMARY

You should now understand how to set-up, maintain and use your snowshoes. You should also understand the advantages and the disadvantages of using snowshoes.

Check on Learning.

1. Why should you step directly on to logs or other obstacles with the snowshoe?

   To prevent excess stress on the snowshoe frame.

2. What is one of the advantages to using snowshoes?

   Snowshoes are easier to use, and require little training to be proficient.

SECTION II. INTRODUCTION

Motivator: The Ahkio sled can carry a load of 200 pounds over difficult terrain and is used for carrying tents, stoves, fuel, rations and other necessary items of each tent group. They are also used for carrying weapons and ammunition. They may be used as firing platforms for machine guns in deep snow and are particularly useful in the evacuation of casualties. Without the availability of an ahkio you will either have to carry the equipment on your back or have to survive without it.

Terminal Learning Objective

ACTION	Haul the scow-sled (ahkio) using skis and/or snowshoes
CONDITION	Given a sled-scow (ahkio), 4 traces, and harnesses in a field environment on snow covered terrain
STANDARD	Haul the scow-sled over the designated course.

Safety Requirements: Daily Risk Assessment conducted. OIC/NCOIC must have medical evacuation plan ready for soldiers injured during this training.

Risk Assessment: Dependent upon current conditions. Squad instructor will conduct a thorough risk assessment prior to any field training.

Environmental Considerations: None

Evaluation: You will be tested on your knowledge of sled hauling during a one hour written examination at the conclusion of the course (Refer to training schedule for date/time of exam). You must score a 70% on the written exam. If you fail the written exam, you will be given a second exam after re-training has been conducted. If you fail this second examination, you will be dismissed from the course.

Instructional Lead-In: You will learn different techniques for moving unit equipment with the scow sled.

SECTION III. PRESENTATION

Learning Step/Activity 1 – Prepare to haul the ahkio sled.

a. It is easiest to pull an ahkio with snowshoes. You may use skis; if skis are used they must be waxed for more grip than glide or climbing skins should be utilized.

b. Secure the following equipment:

(1) 27 foot tow rope (has a snap hook or carabiner at each end and a metal attachment ring in the middle)

(2) 3 each 9 foot traces. Each trace has a snap hook or carabiner at each end.

(3) 1 each 50-60m climbing rope

(4) 4 harnesses

c. If you will be wearing a rucksack, put it on now.

d. Drape the harness over your head and fasten the metal buckle in front. The D shaped ring in the rear of the harness is the connection point for pulling; the ring in front is for braking. If the rucksack rides below the connection point, remove the harness and make attachments directly to the rucksack.

e. Additional Considerations.

(1) Movements of the ahkio pulling team are coordinated by one team member.

(2) Ahkio pulling teams must be rotated frequently to avoid exhaustion

(3) The trail should be broken by a trail breaking team prior to attempting to pull sleds. Heavy brush and forest can make pulling a sled a near impossibility.

Learning Step/Activity 2 – Haul a scow-sled (ahkio) on flat or gently sloped (rolling) terrain.

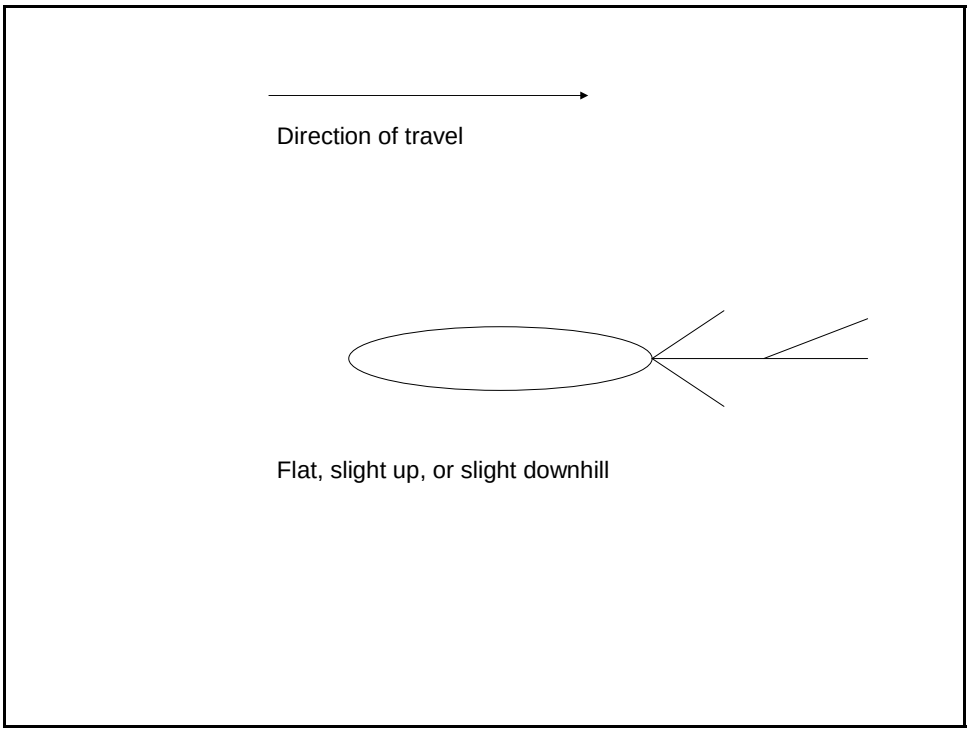

a. Hook the 27 foot tow rope to the front of the sled. Hook one of the 9 foot traces to the ring on the tow rope. The remaining two traces can be hooked to the sled or one to the sled and one to the ring.

b. Connect to the end of each trace and the tow rope.

c. Pull in unison.

Learning Step/Activity 3 – Haul scow-sled (ahkio) on moderately sloping to steep downhill.

a. Use this configuration for moderate to steep slopes. One man in the rear provides a brake.

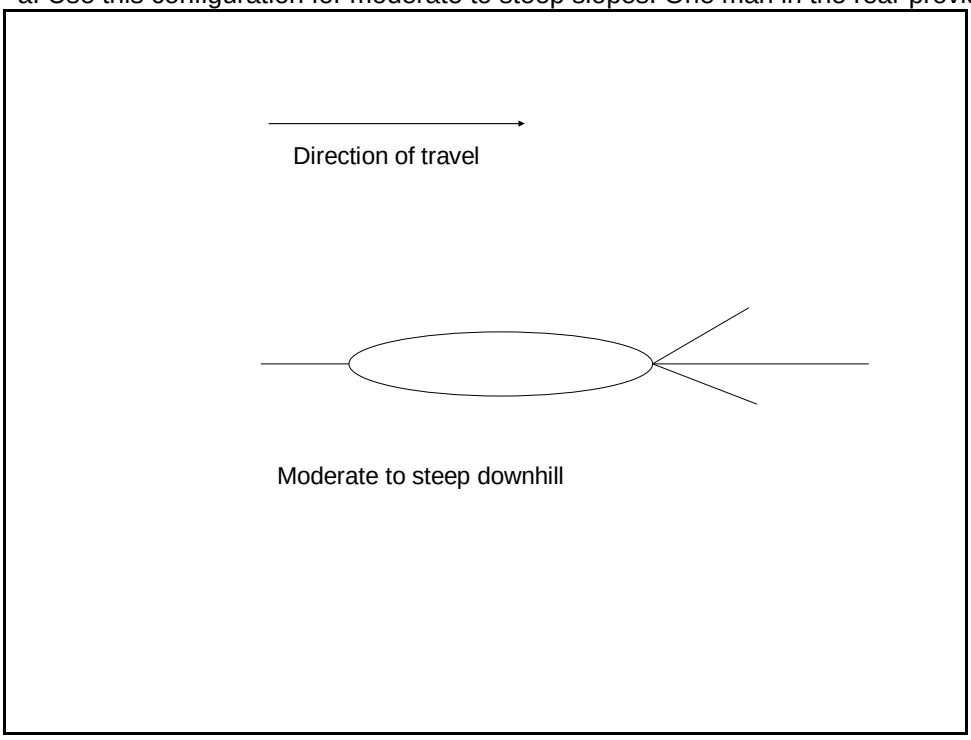

b. Use this configuration for steep slopes; you are essentially allowing gravity to move the sled and controlling the speed of the sled from the rear.

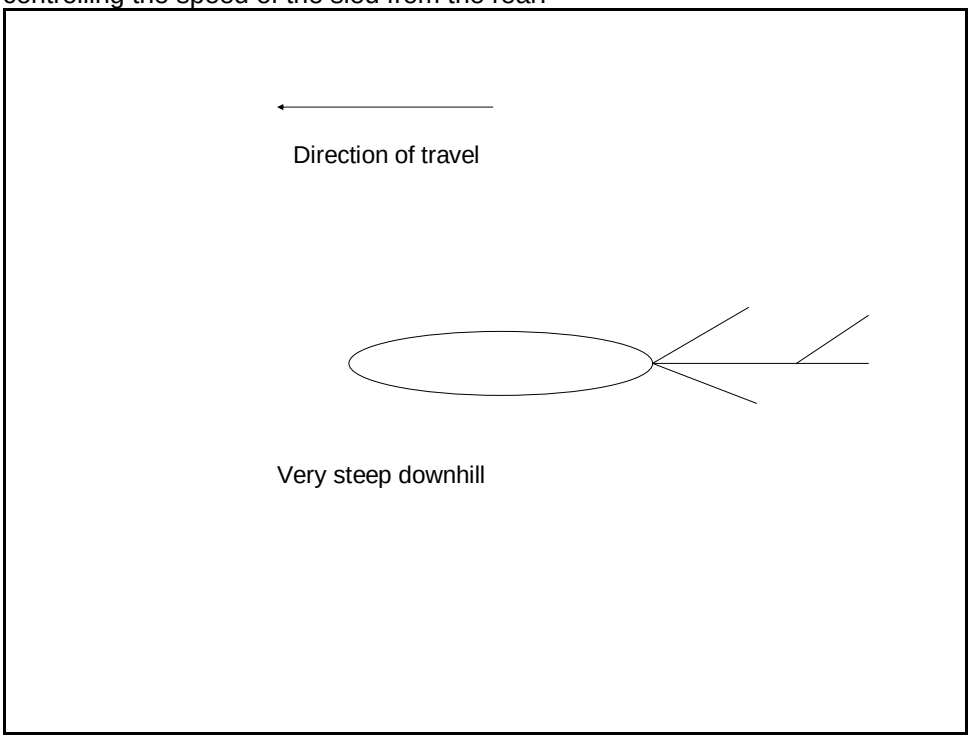

Learning Step/Activity 4 – Traverse a hill with a scow-sled (ahkio).

a. The ropes are hooked to the sled as in LSA-3, except that one or two soldiers are hooked to the uphill side, and the rear soldier is off set to the uphill side. This prevents the sled from tumbling downhill.

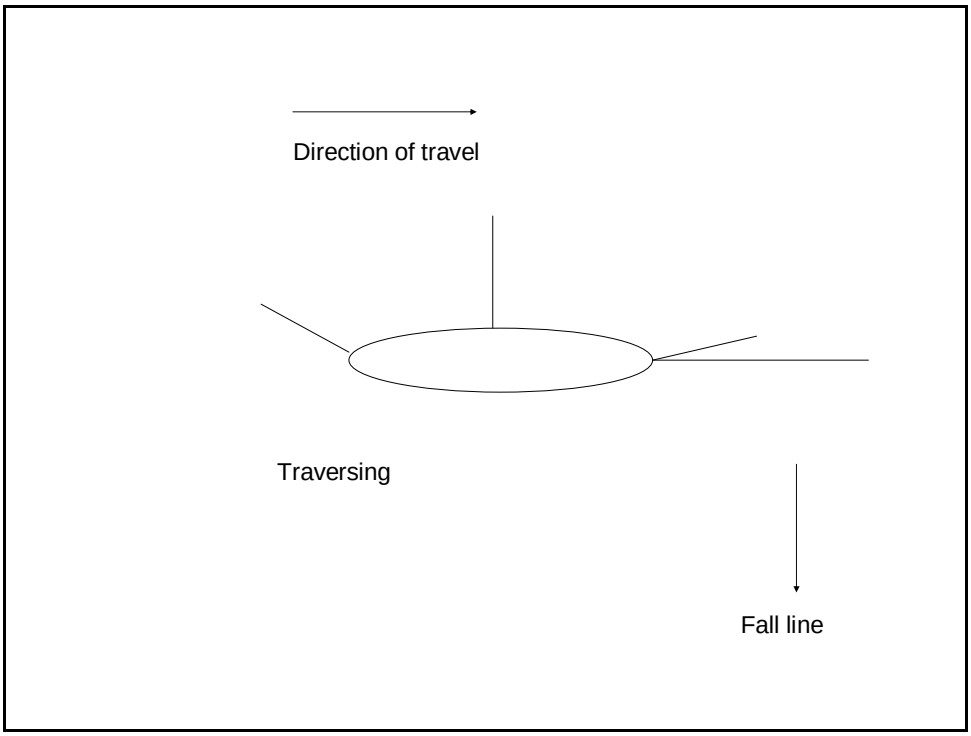

SECTION IV. SUMMARY

The ahkio sled is a useful tool for hauling the necessary tools for a squad to survive for extended periods of time. Now you have the skills set necessary to move this equipment over snow.

Check on Learning.

1. What is the preferred man-powered mode of transporting an ahkio?
Answer - Snowshoes

2. If using skis how should they be waxed?
Answer - More grip than glide.

SECTION II. INTRODUCTION

Motivator: Operating in a cold weather environment puts extreme environmental stresses on you. It will take you a great deal longer to perform even routine tasks and you will fatigue far faster than you would under ordinary circumstances. Performance will improve if you can quickly prepare a heated shelter where you have the opportunity to change your clothes, prepare hot water and food and conduct personal hygiene.

Terminal Learning Objective

ACTION	Conduct tent and stove drill
CONDITION	Given a serviceable Ahkio group, complete with the standard equipment load, and an area large enough to set up the tent and stove group. Task will be performed with a squad/team of no less than 5 personnel.
STANDARD	Set-up tent and ready stove for operation within 30 minutes. Meet all critical performance measures IAW the student evaluation plan.

Safety Requirements: Daily risk assessment conducted; adjustments made to clothing and warming shelter breaks/CWI checks based upon current conditions.

Risk Assessment: Medium (Reference USARAK Pamphlet 385-4)

Environmental Considerations: POL products are utilized during this instruction. Ensure adequate measures are taken to prevent spills and that adequate materials are on hand to clean up any spills that do occur.

Evaluation: You will be tested on this lesson IAW the student/instructor evaluation guide. You will be evaluated as a squad on the tent and stove drill procedure. You will be tested on the operation of the SHA. You will be asked to find deficiencies in a ten-man tent with SHA that has been erected by NWTC instructors. You will also be tested on your knowledge of tent and stove drill during a one hour written examination at the conclusion of the course (Refer to training schedule for date/time of exam). You must score a 70% on the written exam. If you fail the written exam, you will be given a second exam after re-training has been conducted. If you fail this second examination, you will be dismissed from the course.

Instructional Lead-In: You will now learn how to set-up, live in and strike the arctic ten man tent. You will also learn how to assemble, operate and disassemble the Space Heater Arctic (SHA).

SECTION III. PRESENTATION

Learning Step/Activity 1 – List the components of the tent (Ahkio) group.

a. Tent group equipment is designed for use by a rifle squad; however, it can readily be structured to accommodate any task-organized unit, regardless of that unit's size or mission. This section will discuss equipment you will need to be intimately familiar with before undertaking field training in a cold weather environment. The tent group equipment is also commonly referred to as the ahkio group, as the tent and the ahkio are the two key items among all the equipment that constitutes the group.

b. The following is a list of typical tent group equipment recommended for a light infantry squad operating in cold regions:

Table 1: Tent (Ahkio) Group Contents

ITEM	#	NSN or ordering information
Scow-sled, 200 lbs. capacity (ahkio)	**1**	**8920-00-273-8211**
Tent 10-man Arctic, complete with pole board	**1**	**8340-00-262-3684**
Pole Board	**1**	**Cut a 1'x1' piece of plywood. Cut a second 5"x5" piece of plywood. Bore a hole that is slightly larger than the tent pole diameter into the center of the 5"x5" piece and glue it to the center of the 1'x1' piece.**
Door Poles	**2**	**Cut two 6 foot poles that are 2-3 inches in diameter**
Space Heater Arctic (SHA)	**1**	**4520-01-444-2375**
Stove board	**1**	**Cut a piece of plywood 3' x 2', rip it lengthwise in half, cover top side with galvanized sheet steel and re-join the two pieces with hinges. This allows you to fold it in half for storage.**
Five gallon fuel can	**1**	**7240-01-337-5268**
Five gallon water can	**1**	**7240-00-089-3827**
D-handle coal shovels	**2**	**5120-00-188-8446**
Machetes (with sheath)	**2**	**5110-08-13-1286**
Squad cook sets	**2**	**7630-00-272-2485**
Squad stoves	**2**	**NWTC uses the MSR Whisperlite Internationale OR the MSR XGK-EX (this stove can be fitted with a jet that burns JP-8) Contact MSR www.msrgear.com**
Fuel bottles	**2**	**Order from MSR**
Bow saw	**1**	**5110-00-340-3276**
Ax	**1**	**5110-01-416-7827**
Hammers 2 lb.	**2**	**5120-00-203-4656**
50 or 60m static rope OR Army 120' Greenline	**1**	**4020-01-526-6234 (NWTC uses Blue Water Ropes/ contact APEXX 404-551-4913 or www.apexxsales.com)**
Trace, ahkio pulling, 9 ft	**3**	**Cut from static rope (you can buy in spools and cut)**
Tow Rope 27 feet	**1**	**Cut from static rope**
Harnesses, Man's, Sled (ahkio towing)	**4**	**8465-00-255-8413**
Aluminum oval carabiners (used for towing and rescue systems)	**8**	**NWTC uses Omega Pacific Ovals / contact APEXX 404-551-4913 or www.apexxsales.com**
Aluminum Locking Pear Shaped Carabiners (used for rescue systems)	**2**	**NWTC uses Tactical Jake HMS Screw Lok / contact APEXX 404-551-4913 or www.apexxsales.com**
25' 1 inch tubular nylon webbing (used for rescue systems)	**1**	**NWTC uses climb spec webbing / contact APEXX 404-551-4913 or www.apexxsales.com**
6' 7mm cordelette	**2**	**NWTC uses Blue Water 7mm accessory cord / contact APEXX 404-551-4913 or www.apexxsales.com**
Fire extinguisher	**1**	**4210-00-165-4703**
Lantern, gasoline*, with case	**1**	**NWTC utilizes a Coleman Brand White Gas Lantern**

*****CAUTION: THE USE OF PROPANE-FUELED LANTERNS DURING COLD WEATHER OPERATIONS IS NOT RECOMMENDED. PROPANE TURNS TO LIQUID AT APPROXIMATELY –40°F. IN THIS LIQUID STATE IT MAY SPRAY FROM ITS' CONTAINER WHEN THE VALVE IS OPENED, CREATING AN EXTREMELY HAZARDOUS CONDITION.

Table 2: Recommended Repair Items

ITEM	NSN
CLIP, LINER	8340-00-242-7872
CLOTH, DUCK, 5 YARDS (Ahkio Cover)	8305-00-926-6171
D-RING, ONE INCH BRASS	5390-00-260-1414
LINER, TENT	8340-00-262-3698
PEAK PLATE	8340-00-965-4432
PIN, TENT, STEEL	8340-00-823-7451
POLE, TENT	8340-00-188-8413
SLIP, TENT LINE	8340-00-205-2759
TENT LINE, 12' 6"	8340-00-262-3658
TENT LINE, 19'	8340-00-262-6911

Figure 1: Tent (Ahkio) Group Contents

c. The scow sled, 200 lb. capacity, commonly known as the ahkio, is the infantry squad's primary means of transporting tents and other sustainment equipment in a cold weather environment. It is a 38 pound fiberglass sled with an attached canvas cover, and has a carrying capacity of 200 pounds. In addition to its' primary function of transporting the tent group equipment, the ahkio is excellent for transporting weapons, rations, and ammunition, providing a stable firing platform for crew-served weapons in deep snow, and for casualty evacuation.

Learning Step/Activity 2 – Describe general characteristics of the ten-man arctic tent.

a. This six-sided pyramidal tent, supported by a center pole, normally accommodates ten soldiers with their individual equipment. When necessary, it can accommodate additional personnel if their equipment is stored outside. It may also be utilized as a command post, aid station, or storage shelter. The tent has a liner and two doors, each of which is provided with a series of toggles and loops around their outer edges. When additional space is required, these toggles and loops allow two or more tents to be joined together with unrestricted access from one to another.

b. A snow cloth is attached to the bottom of the tents' side walls; it is used to seal the tent to the ground in order to conserve heat in exposed or wind swept areas. This is accomplished by placing insulating material such as spruce boughs, brush, cardboard or other suitable material between the ground and the snow cloth.

CAUTION: NEVER ALLOW THE SNOW CLOTH TO FREEZE TO THE GROUND. IN THE EVENT OF A FIRE, PERSONNEL MUST BE ABLE TO ROLL OUT FROM UNDER THE WALLS OF THE TENT; THERE WILL NOT BE ENOUGH TIME FOR PERSONNEL IN THEIR SLEEPING BAGS TO GET UP AND FILE OUT OF THE TENT DOOR.

c. The tent is ventilated in four locations by built-in ventilators on opposite sides near the apex, or top, of the tent. Four drying lines are rigged inside the tent, on which personnel can hang wet clothing and equipment. The total weight of the tent, liner, telescoping center pole and tent pins is approximately 76 pounds. It is quite bulky and very heavy, but is easy to set up, with few parts; attempts to design new tents have resulted in more complex designs that are not blackout capable and weigh as much or more than the ten-man arctic tent.

Ten-Man Arctic Tent

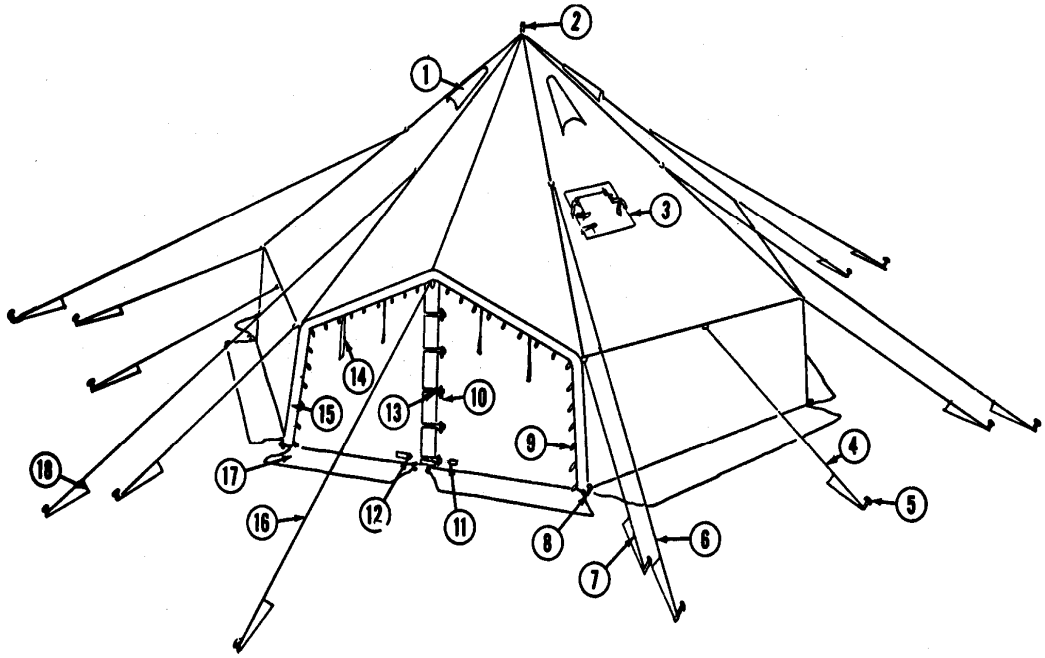

1. Ventilator
2. Telescopic tent pole
3. Stovepipe opening (silicone rubber molded ring)
4. Tent line, eave
5. Steel tent pin
6. Tent line, corner
7. Tent line, corner eave
8. Foot stop
9. Becket
10. Wood toggle
11. Chape snap
12. D-ring
13. Toggle loop
14. Tie tape
15. Tent lug
16. Tent line, door eave
17. Snow cloth
18. Tent slip

Learning Step/Activity 3 – Pitch the ten-man arctic tent.

a. This shelter is easily erected by six soldiers. One technique is to designate a soldier to manage the contents of the ahkio while the other soldiers set up the tent and stove. This man readies items for use and prevents items from being lost in the snow. Another man sets up the stove while the tent is erected. Use the following procedures to set-up the tent:

(1) Dig the snow to ground level or pack the snow down firmly, in the area to be occupied by the tent.

(2) Extend the tent out:

- Unfold the tent and position it on the cleared site. Remove the daisy chain from the corner eave lines
- One soldier grabs the apex of the tent. Three Soldiers each grab two corners. If more Soldiers are available each Soldier can grab a corner.
- The Soldier at the apex throws the apex straight up while the other three Soldiers move out and away.
- Rotate the tent so that the main door is positioned at an angle of 45° away from downwind. The main entrance is the tent door located closest to the stove pipe opening in the roof of the tent. Prevailing wind directions may be determined by examining the drift patterns of snow in the immediate area. In areas having variable winds, a windbreak may be constructed to shelter the main entrance.

(3) Zip both door entrances (to include liner) shut. If the tent zipper is unserviceable, use the metal clip and D-ring, located at the bottom edge of the door to hold the door shut while the tent is erected. If the tent is erected while the doors are open, you may not be able to zip the doors shut once all the tent lines are tightened.

(4) Fully extend all corner eave lines. The corner eave lines are located on opposite sides of the tent, where the roof meets the walls and the walls form corners. Altogether there are six corner eave lines. Corner eave lines must be inline with the corresponding seams of the tent.

(5) Mark spots on the ground approximately six feet, (two steps), from each corner of the tent. This is where the corner eave lines will be anchored.

(6) Drive tent pins on the marks. Angle the tent pins slightly away from the tent; this will prevent the lines from slipping off the pins and/or pulling the pin out of the ground. Attach the corner eave lines to the pins but leave them slack for now.

(7) Extend the center pole to a length between 6 and 8 feet and lock it in this position. One soldier, “pole man”, crawls under the tent with the center pole and pole board. Place the stud at the top of the center pole through the hole in the perforated metal plate at the roof apex. Hold the pole vertically and place the pole board underneath the base of the pole.

NOTE: ALTHOUGH THE GROUND UNDER THE TENT MAY BE FROZEN UPON TENT ASSEMBLY, AFTER A PERIOD OF TIME WITH THE HEATER FIRED, THE SURFACE WILL THAW AND THE POLE MAY SINK WITHOUT THE BASEPLATE.

(8) Tighten the corner eave lines:

- The pole man maintains the vertical position of center pole.
- Two Soldiers take up a position at opposite corner eave lines. Each Soldier pulls on his corner of the tent (not on the lines) at the same time to tighten the corner eave lines. Continue tightening the remaining corner eave lines. The pole man can exit the tent after all the corner eave lines are tightened.

(9) Unroll the six corner lines. They are located on the seams between the corner eave lines and the tent roof apex. Attach the corner lines to the tent pins securing the corner eave lines. Tighten the

corner lines. Ensure that the corner eave line and the corner line at each corner are in line with their corresponding seams.

(10) Mark spots approximately six feet from the eave lines. Drive tent pins on the marks. Attach and tighten the four eave lines.

(11) Anchor the two door eave lines:

- For each door, drive a tent pin in the surface approximately six feet from the tent.
- Hold the door pole vertically about three feet from the tent door, between the driven pin and the door eave line.
- With the door eave line, position a clove hitch approximately five feet up on the door pole and secure and then tighten the end of the line to the pin. The door pole raises the effective door height to about four feet, allowing more clearance for entering and exiting the tent.

(12) Spread the snow cloth on the ground outside the tent. The snow cloth should not be weighted down; doing so could prevent soldiers from rolling out of the tent in the event of a fire. The snow cloth should not be spread inside the tent for the same reason.

CAUTION: IF THE SNOW CLOTH IS SPREAD INSIDE THE TENT, IT MAY PREVENT PERSONNEL FROM ROLLING OUT IN THE EVENT OF A TENT FIRE.

(15) Open the four ventilators from the inside by pushing them outward.

(16) Position the fire extinguisher at the center pole.

(17) If you will be using a stove to heat the shelter, roll open the stove pipe opening flaps and secure them in this position.

b. Additional considerations.

(1) Getting a shelter up with the stove running should be rehearsed prior to going to the field. ALIT training is the ideal time to do this. Rehearsals should include putting the tent up with Arctic mittens on.

(2) Digging in the tent is preferred, as it reduces the tents' profile, and the tent is better protected from the wind. Digging in also provides some protection from enemy observation as well as from small arms fire. In open areas a snow wall should be constructed to protect the tent from the wind. This will facilitate heating of the tent, as well as reduce the likelihood of the tent being blown down. Allow a minimum of 6.5 feet clearance between the walls of the tent and the walls of the snow pit; in the event of a fire, personnel must have room to roll out from under the tent walls in order to escape the flames.

(3) Pins do not hold well in snow, and may be difficult or impossible to drive into frozen or rocky ground. In wooded areas, tent ropes may be rapidly and securely anchored by attaching lines to trees, branches, logs, or stumps whenever possible. If natural anchors such as trees are unavailable and difficulty is encountered driving tent pins, suitable anchors may be established in snow using "deadman" anchors.

- A deadman anchor is simply any object with a large surface area which can be dug into the ground or snow with the long axis of the object perpendicular to the end of the tent line. The tent line is then attached to the center of the object, and the hole filled with the removed dirt or snow. The looser the material from the hole, the more surface area the object will require to be an effective anchor.
- On rocky ground, tent lines may be tied off to large rocks, or weighted down with piles of stones. Occasionally, tents may be pitched on ice. Ice pitons or screws may be used in place of tent pins. If ice pitons or screws are unavailable, an anchor may be established by chopping a small hole into or through the ice, and placing a stick or pole into the hole.
- The object placed in the hole may freeze in place permanently. To prevent damage to the tent lines, attach a separate rope or wire to the object in the ice hole and secure the tent line

to this material. If you are unable to chop completely through the ice, water may be poured into the hole after the stick is placed into it, causing the object to freeze in position, creating a much more secure anchor.

Learning Step/Activity 4 – Explain the characteristics of the Space Heater Arctic (SHA).

a. General Characteristics.

(1) The SHA is used to heat the ten man tent. The SHA can burn both liquid and solid fuels, although operation with solid fuels requires some minor modification. The SHA and component parts weigh approximately 41 pounds.

(2) The SHA provides heat in the range of 15,000 to 25,000 BTU/hour. The Thermoelectric Fan (TEF) will help to circulate the heat generated by the SHA.

(3) *Approved liquid fuels are JP-5-8, DF-A-1-2, Kerosene and Jet A; approved solid fuels are wood and coal.*

CAUTION: Gasoline, JP-4, used motor oil, solvents or other unauthorized fuels should NEVER be used. Using unauthorized fuels will create a fire danger and potential for explosion.

(4) One 5-gallon can of approved liquid fuel will burn for approximately 15 hours at the maximum firing rate. Operating temperatures are -60 degrees F to +50 degrees F. Operating elevations are to 0-6,000 feet above mean sea level. It is possible to operate the SHA at higher elevations, but the stove will require more frequent cleanings and inspections.

(5) A piece of plywood, slightly larger than the base of the stove and sheathed in tin or aluminum, should always be carried as part of the tent group equipment. This "stove board" provides a firm base for the stove to stand on, as well as reducing the fire hazard when the stove is operated in a tent where the floor is covered with grass, leaves, or other potentially combustible material.

(6) When disassembled for transport, all of the components with the exception of the stove board will fit inside the stove body, reducing the space required to pack the stove in the ahkio.

Learning Step/Activity 5 – Describe the major components of the SHA.

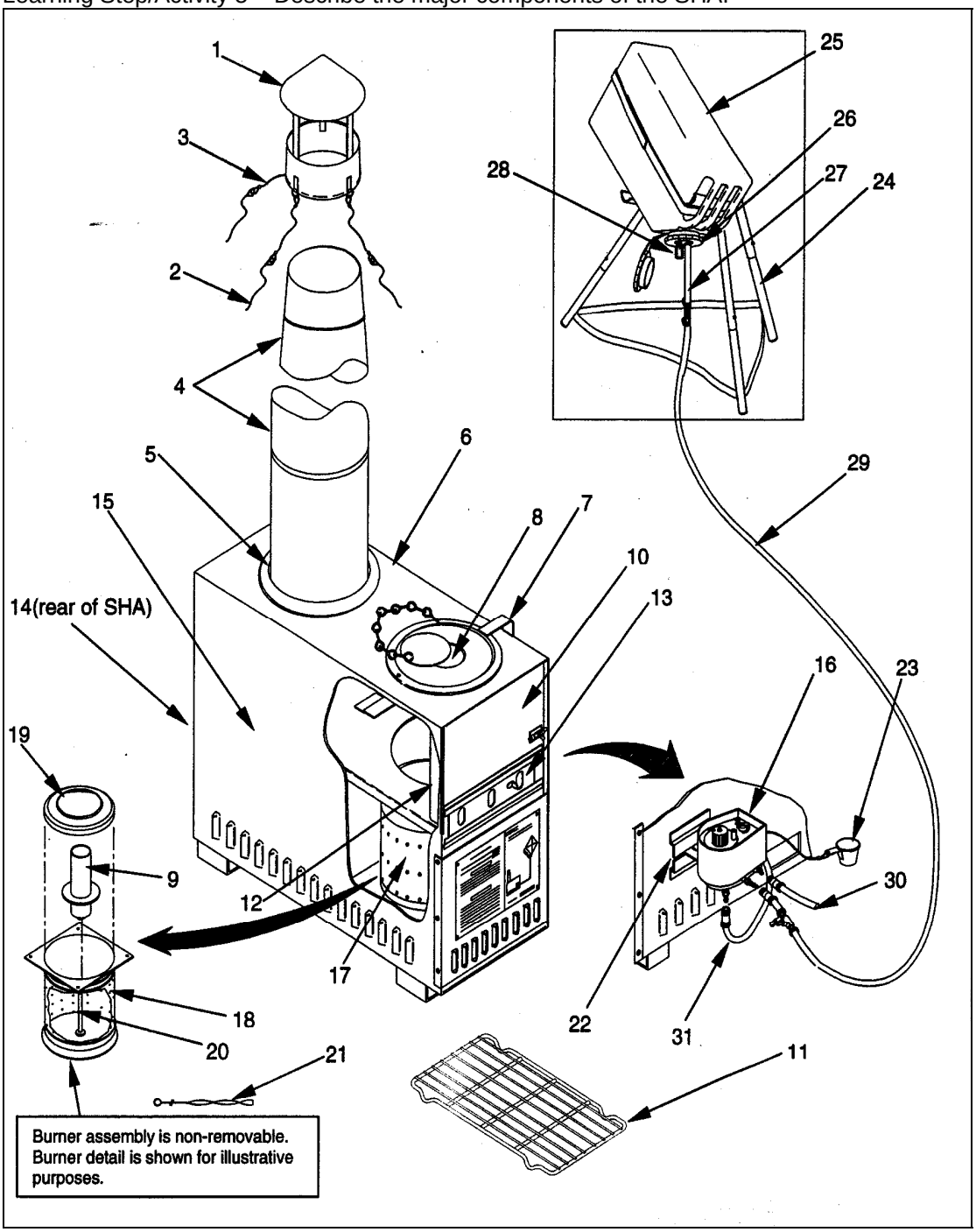

Figure 3: Location of Major Components

a. Stack cap assembly (1). The Stack Cap Assembly is installed on the top of the nested stack assembly (4) to prevent down-drafts from entering the heater during operation. It also prevents rain, leaves, and other debris from entering the stack assembly. Guy lines (2), secured to three wire ropes (3), lead to tent lines that stabilize the entire stack assembly (4) in an upright (vertical) position during heater operation.

b. Nested stack assembly (4). Consists of six pipe sections (middle sections not shown) of decreasing diameter. When assembled, the sections form a cone-shaped stack with the largest diameter section at the base and the smallest diameter at the top. Each section is flanged on its smaller end in order to fit into the next higher section. The assembly (4) seats in the stack adapter

assembly (5), allowing combustion gases to discharge outside the tent during operation. When disassembled, the sections fit inside each other for storage in the upper portion of the heater body (6).

c. Heater body assembly (6). Basic shell of the heater.

d. Lid assembly (7). The lid assembly (7) fits into a circular opening on the top surface of the heater. The built-in sight glass (8) allows the user to monitor the burner flame. It also permits access to the burner down tube assembly (9) when igniting liquid fuel. The lid assembly (7) is stored in the upper portion of the heater body (15).

e. Door assembly (10). Hinged door is secured with a slide latch. When opened, it allows access to install and remove the solid fuel grate (11) and burner cover assembly (12). It permits adding and igniting fuel in solid fuel operation. A built-in sliding draft gate (13) allows burn rate control during solid fuel operation only.

f. Burner cover assembly (12). During solid fuel operation, this cover (12) is positioned on top of burner shell (18) to prevent ashes, coals, and embers from falling into the burner shell. During liquid fuel operation, the cover (I 2) is positioned in the frame of the door assembly, and held in position by the closed door (10), to achieve a tight air seal.

g. Solid fuel grate (11). Elevates solid fuel while it burns to allow for air circulation and to provide an area for ash deposits. The Solid Fuel Grate MUST be removed prior to liquid fuel operation.
Rear door (14). The Rear Door fits on the rear of the heater and acts to contain the parts which may be stored in the storage enclosure (15) while the heater is not in use.

h. Rear storage enclosure (15). Accessed through the rear door (14) and used to stow all loose parts that will not fit inside the heater body during transport of the heaters. Items stored in this area include the Fuel Flow Control Valve (16), Stack Cap Assembly (1), and Gravity Feed Adapter (26).

i. Burner shell assembly (17). Area of combustion in liquid fuel mode. Consists of a perforated burner shell (18), high fire ring (19), and up-tube (20) which is welded into the base of the burner shell (18). It permits fuel vapors to flow into the down-tube assembly (9) during operation.

j. Down-tube assembly (9). A capped down tube which is positioned on the up-tube (20) and removable through the lid assembly (7). A super-heater ring is located on the exterior for heat transfer. During operation, fuel flows into the up-tube (20), where its level is gravity-maintained with the fuel flow control valve (16). Fuel vaporizes due to combustion heat and fuel vapor is expelled from the up-tube (20), down through the down tube and into the burner shell (18) where it ignites. The down-tube (9) and up-tube (20) are cleaned with the reaming tool (21), which Is kept inside the heater body during storage (15). The reaming tool (21) should be stored in an accessible yet protected location when not in use.

k. Fuel flow control valve (16). Mounts to a 'T" shaped bracket (22) and slides into position on the right side of the heater body (6). The valve (16) functions safely with the liquid fuels specified in this work package. When set properly, internal orifices match the viscosity of the fuel being used to meter the correct fuel flow to the burner. The cup/cable assembly (23) is attached to the bracket and is used for measuring fuel to prime the heater in liquid fuel mode.

l. Fuel can stand, collapsible (24) (optional item). Allows the fuel can (25) to be mounted in an inverted position to permit gravity fuel ' feed to the fuel flow control valve (16). (Note: The Fuel Can Stand is available as Additional Authorized Item as detailed in WP0045).
m. Gravity feed adapter (26). Threads onto fuel can (25). Hose (27) allows during operation. The automatic vent (28) permits air to vent into the can for proper fuel flow to the heater.Fuel hoses (29) (30). Fuel supply hose (29) allows fuel flow from fuel can (25) through the gravity feed adapter (26) to the fuel flow control valve (16), through the hose to the burner up-tube (20). An overflow hose (30) drains fuel outside the tent in the event of a malfunction of the Fuel Flow Control Valve (16). Hoses, (29) and (30), connect with quick-disconnect couplings. The fuel control outflow hose (31) delivers fuel from the control valve to the burner assembly. The fuel supply hose (29) and overflow hose (30) are both stored in the upper portion of the heater body (15).

Learning Step/Activity 6 – Assemble the Space Heater Arctic.

a. Before setting up the stove, inspect the tent to ensure that no conditions exist which would make operation of the stove unsafe. Ensure that the stove pipe opening in the tent roof is serviceable, with no cracks or tears in the silicone rubber coated ring. Next, ensure that the stove pipe opening flaps are rolled and securely tied, and that each flap can be tied at both the top and the bottom.

CAUTION: THE LEADING CAUSE OF TENT FIRES ARE LOOSE STOVE PIPE OPENING FLAPS COMING INTO CONTACT WITH HOT STOVE PIPES

CAUTION: INSURE ALL FUEL SPILL CONTROL MEASURES ARE IN PLACE BEFORE USING THIS STOVE.

b. The SHA utilizes the area inside its shell for the storage of components during movement and storage. Some of the components are stored behind the front door while others are stored behind the rear door (See Figure 3). To unpack the SHA:

(1) To unpack the SHA, press down on the spring-tensioned Rear Door (1) and remove the Fuel Flow Control Valve (2), Stack Cap Assembly with Tent Lines (3), and Gravity Feed Adapter (4).

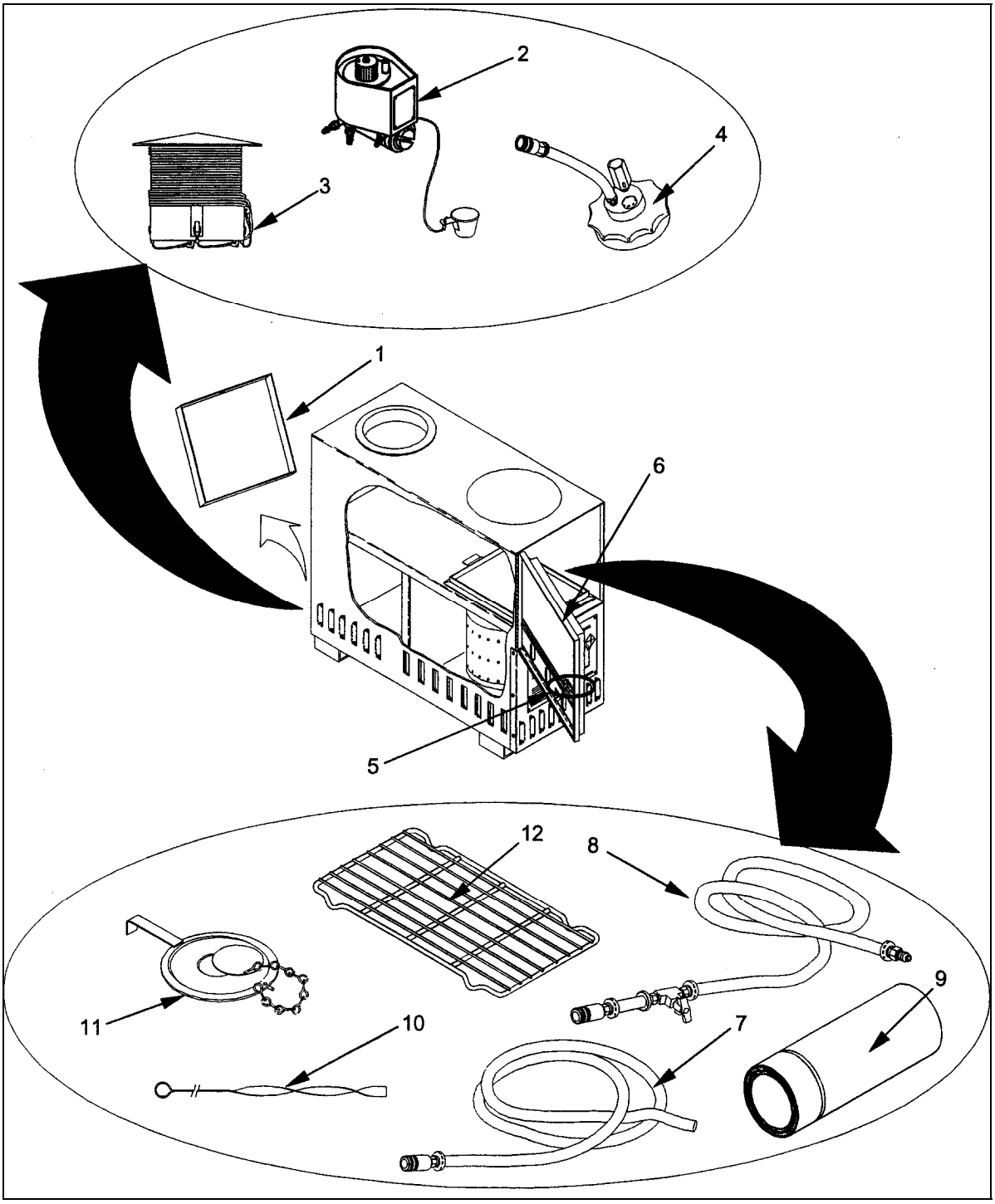

Figure 4

(2) Reinstall the Rear Door (1) by placing the bottom edge of the door in the slot at the bottom of the heater frame. Press down on the door and swing it into position in the heater frame until the pin on the frame engages with the small slotted hole on the top edge of the rear door. Release the Rear Door. (3) Slide the front door latch (5) to the left and open the front door (6). Remove the Burner Cover Assembly if it is installed in the door frame.

(4) Remove the Fuel Overflow Hose (7) (stored inside the Nested Stack Assembly), Fuel Supply Hose (8), Nested Stack Assembly (9), Burner Reaming Tool (10), Lid Assembly (11) and Solid Fuel Grate (12).

(5) Install the Burner Cover Assembly (refer to next section for details). Close and latch the Front Door (6).

(6) Before the SHA can be operated, the Burner Cover Assembly (1) must be installed according to the type of fuel being used:

- For Liquid Fuels: If the heater will be operated in Liquid Fuel mode, the Burner Door Assembly (1) must be installed in the door frame (2) located behind the Front Door (3). This is to prevent any air from entering through the front door of the heater. To verify proper installation of the Burner Cover Assembly, slide the front door latch (4) to the left and open the front door (3); ensure that the solid fuel grate (10) is not installed. The Burner Cover Assembly (1) must be installed in the door frame (2), blocking the area behind the front door (3). When the Burner Cover Assembly (1) is installed, close and latch (4) the front door (3).
- For Solid Fuels: When preparing to use the heater in solid fuel mode, the Burner Cover Assembly (1) should be installed over the Burner Assembly opening (5). To install the Burner Cover Assembly for solid fuel operation, slide the front door latch (4) to the left and open the Front Door (3). If the Burner Cover Assembly is currently installed in the door frame (2), remove it and allow it to hang from its retaining chain (6). If the Solid Fuel Grate (7) is installed, remove the grate and install the Burner Cover Assembly (1) smooth side down over the Burner Assembly opening (5). Slide the cover back toward the rear of the heater until its back edge (8) engages in the Burner Cover retaining clip (9). Install the Solid Fuel Grate (7) in position over the installed Burner Cover Assembly (1) making sure to install the grate with its feet (10) down on the deck (11) of the upper heater area.

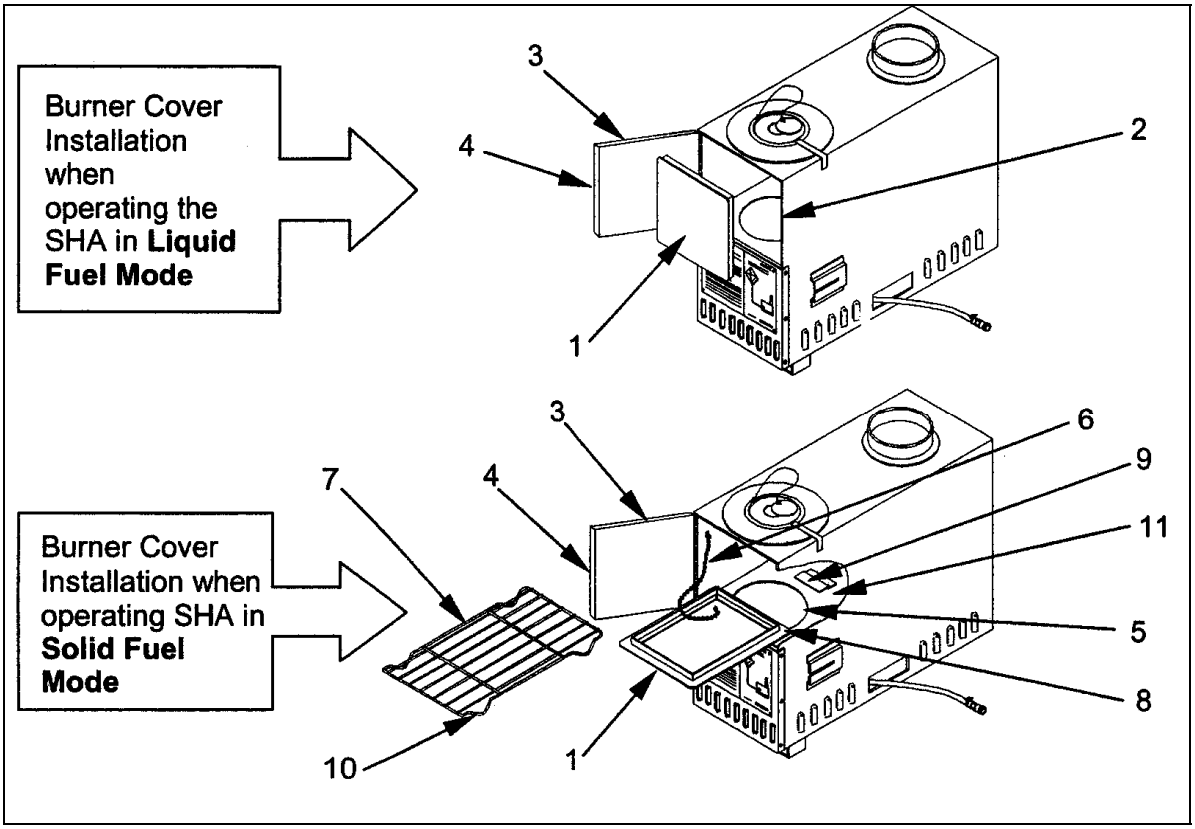

Figure 5

WARNING: DO NOT USE UNAUTHORIZED FUELS ONLY APPROVED LIQUID AND SOLID FUELS MAY BE USED. USING UNAUTHORIZED FUELS IN THE SHA WILL CREATE A FIRE DANGER AND POTENTIAL FOR EXPLOSION

CAUTION: IF FUEL FLOW CONTROL VALVE ASSEMBLY IS IMPROPERLY POSITIONED OR IF BRACKET IS BENT, A FUEL OVERFLOW COULD OCCUR INSIDE BURNER SHELL ASSEMBLY AND CAUSE A FIRE OR EXPLOSION.

CAUTION: FOR SAFE OPERATION, BE SURE TO ALLOW AT LEAST TWO FEET OF SPACE BETWEEN THE HEATER AND THE SHELTER WALL. NEVER RE-LIGHT A HEATER WHEN IT IS STILL HOT. BE SURE TO ALLOW THE HEATER TO COOL COMPLETELY BEFORE ATTEMPTING TO RE-LIGHT. DO NOT ATTEMPT TO REPLENISH THE FUEL SUPPLY WHILE THE HEATER IS IN OPERATION.

(7) Before operation perform the "Before Operation PMCS" on all SHA system components as outlined in the TM, prior to preparing the heater for use. All scheduled maintenance must be performed on the heater and its associated equipment prior to use.

(8) Set up the heater inside its operating space (shelter). The area selected must be level and free of debris and flammable materials.

(9) Assembly of the stack assembly:

- (See Figure 5) Securely roll and tie exhaust opening closure flap (1) so it will not touch stack assembly during heater operation. Assemble stack section (See Figure 6), (8) and (9) (stamped 1 and 2), ensuring that the seams are lined up. Place the largest diameter stack section (stamped 1), into the heater. Set the heater directly under the shelter exhaust opening.

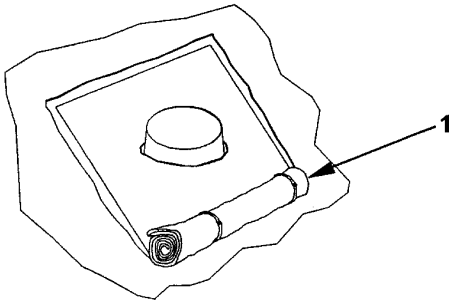

Figure 5

- First time set up only. (See Figure 6) Tie one end of each shelter line (1) to each wire rope (2) on stack cap (3). Set this assembly aside.

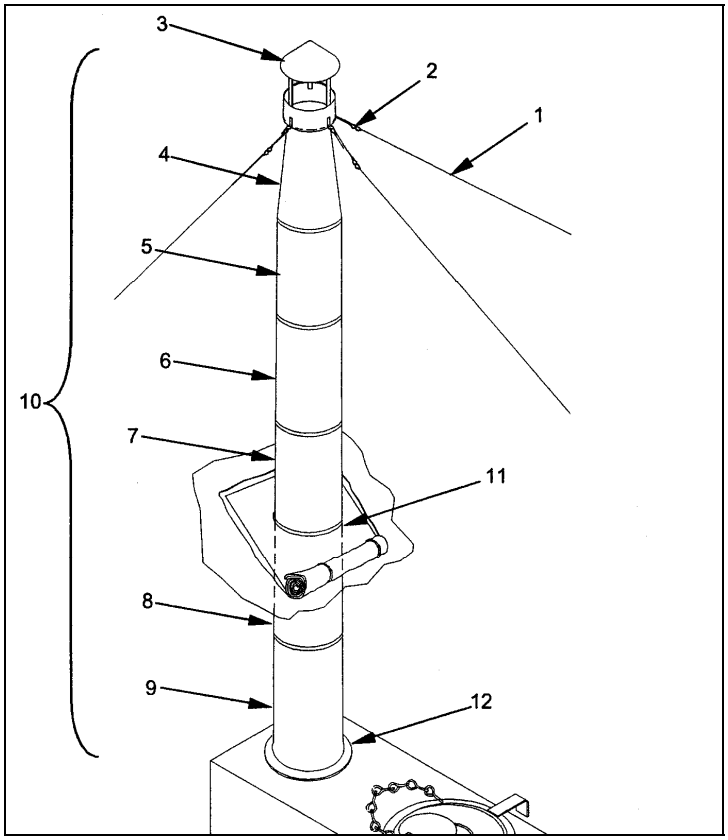

Figure 6

- Separate the stack assembly and assemble stack sections (4-7), in order of decreasing size, onto the crimped end of each adjoining stack section. Each stack section is stamped on the side with a number. Add the stack cap (3). Ensure that the seams on all pipes are aligned. Lift the assembled exhaust stack (3-7) and pass it through the exhaust opening (11).
- Insert stack section (3-7) onto stack section already on the stove (8, 9). Again, ensure the seams line up.
- Making sure that the assembled exhaust stack (10) is positioned straight, tie the stack cap guy lines to the closest corresponding tent line, where the tent line attaches to the tent eave.

CAUTION: DO NOT CONNECT THE GUY LINES TO FIXED OBJECTS SUCH AS TREES OR ADDITIONAL TENT PINS. IF THE TENT IS MOVED BY WIND OR AS THE RESULT OF PERSONNEL BUMPING AGAINST IT, THE STOVE AND PIPES MUST BE FREE TO MOVE WITH IT. IF NOT, THE STOVE COULD COLLAPSE RESULTING IN A TENT FIRE.

NOTE: If you will be operating the stove with liquid fuels, go to Learning Step/Activity 7. If you will be operating the stove with solid fuels, go to Learning Step/Activity 8. •

Learning Step/Activity 7 – Place the SHA into operation utilizing liquid fuel.

a. Install the fuel flow control valve (See Figure 7):

WARNING: FIRE OR EXPLOSION CAN RESULT. IF FUEL FLOW CONTROL VALVE ASSEMBLY IS IMPROPERLY POSITIONED OR IF BRACKET IS BENT, A FUEL OVERFLOW COULD OCCUR INSIDE BURNER SHELL AND CAUSE A FIRE OR EXPLOSION.

CAUTION: WHEN LIGHTING OR REFUELING THE STOVE, ALL PERSONNEL IN THE TENT MUST BE AWAKE AND PREPARED FOR EMERGENCY EXIT. A FIRE GUARD MUST BE STANDING BY WITH A FIRE EXTINGUISHER AT THE READY.

CAUTION: WHEN THE STOVE IS IN OPERATION, A FULLY DRESSED, ALERT FIRE GUARD MUST BE MONITORING THE STOVE AT ALL TIMES. THIS FIREGUARD MUST BE LISCENSED ON THE STOVE.

(1) Slide fuel flow control valve from front to back fully into the sleeve on the right side of the heater. Be certain that the control valve is fully seated in the sleeve, does not bind in the sleeve, and is level with heater when installed.
(2) Reach into the cutout area on the right side of the SHA and pull out the fuel control outflow hose.
(3) Connect overflow hose Quick Disconnect (QD) to fuel discharge fitting on base of control valve.
(4) Connect fuel supply hose to fuel inlet fitting.

b. Preparing A Fuel Supply Site:

(1) Select a level fuel supply site, free of debris and open flame, at least seven feet from shelter.

NOTE: Open end of overflow hose should discharge to a safe, outside location along a *downslope* and below the level of the fuel flow control valve. A piece of commercial petroleum absorbent material, such as New Pig's Stat-Mat roll, will be placed under the end of the overflow hose to catch any fuel that may spill. Additional commercial products are available to contain large spills, such as New Pig's Absorbent Sock.

(2) Route the overflow hose and fuel supply hose outside the shelter to the fuel supply location. Ensure the fuel line is routed away from the stove body to prevent it from coming in contact with the stove body.
(3) The overflow hose should discharge to a safe, downward sloping, outside location below the level of the fuel flow control valve. Place a petroleum absorbent mat under the open end of the hose.

WARNING: DO NOT USE ANY UNAUTHORIZED FUEL. USE OF UNAUTHORIZED FUEL MAY RESULT IN FIRE AND/OR EXPLOSION.

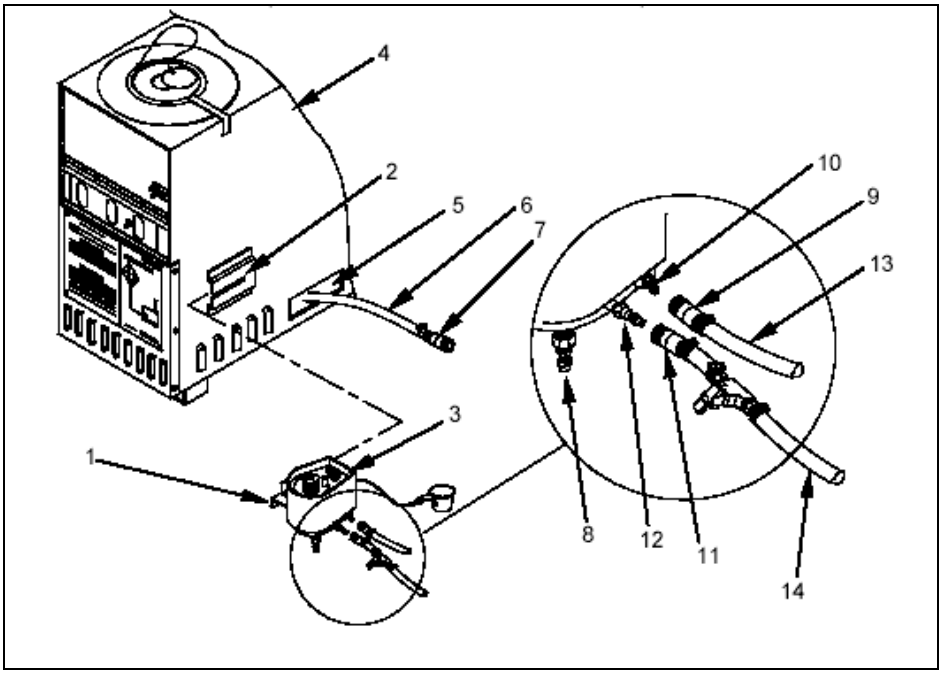

Figure 7

(4) Install Gravity Feed Adapter In Fuel Can (See Figure 8)

- At the fuel supply site, install a gravity feed adapter on a full fuel can as follows:

WARNING: GRAVITY FEED ADAPTER KIT MUST BE FULLY SEATED TO PREVENT FUEL LEAKAGE AND FIRE.

- Set fuel ON/OFF control on the fuel flow control valve to the OFF position.
- Remove cap from mouth of fuel can and replace with gravity feeder adapter. Screw the adapter into the fuel can securely.
- Attach male end of fuel supply hose to gravity feed adapter fitting. Set the assembled fuel can aside.
- At the fuel supply site, set up fuel can stand with fuel can level or slightly above heater as detailed in the next section.

NOTE: If fuel can stand is unavailable, invert fuel can with installed gravity feed adapter on a stable support so that the bottom of the fuel can is two feet (61 centimeters) to three feet (91.5 centimeters) above fuel flow control valve.

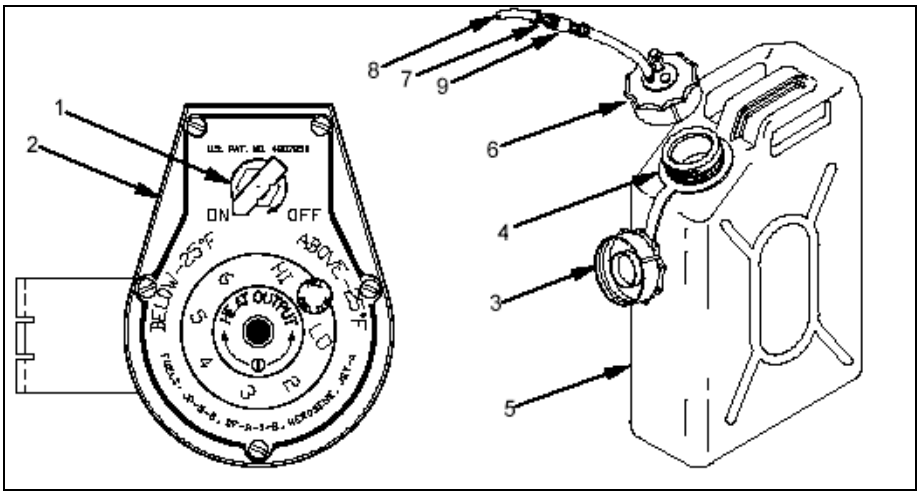

Figure 8

(5) Setting up the Fuel Can Stand (See Figure 9)

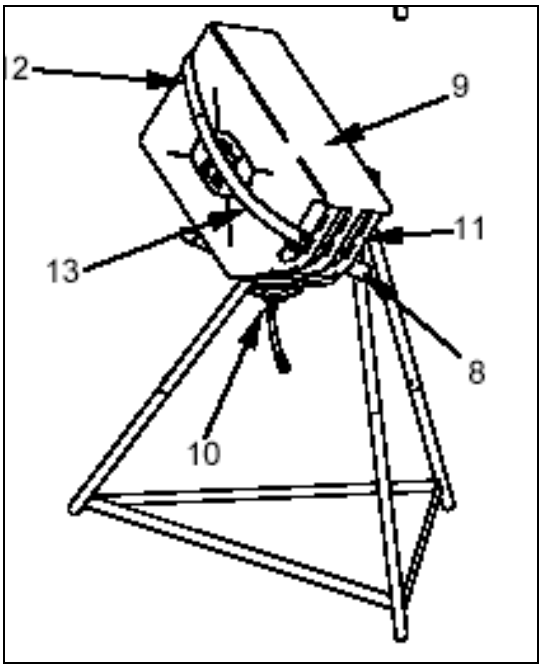

Figure 9

- If liquid fuel is to be used, the fuel can stand (optional item; the fuel can stand is available as an Additional Authorized Item) must be assembled in order to mount the fuel can in the proper position. The fuel can, outfitted with a fuel can gravity feed adapter, must be mounted to the stand with the gravity feed adapter facing down. The design of the fuel can stand places the fuel can 2-3 feet above the fuel flow control valve. See Figure 10 below for an improvised support stand.
- Insert the bottom leg assembly into the top leg assembly until each leg is locked in place. Be sure to orient each bottom leg so that the stabilizing straps are positioned toward the inside of the stand. Ensure that the straps are not twisted.
- Spread the assembled leg assembly until the stabilizing straps are fully extended and the stand is stable. The leg assembly straps are designed to ensure the stand is stable, but are also designed to prevent the stand from sinking into snow.
- Lower the left and right support arms so that each is at a right angle to its attached leg. Place the tripod brace under the top bracket of the stand and clip into position over the front of the top bracket.

NOTE: Ensure that the Fuel Can Gravity Feed Adapter is fully seated and secured to avoid leaking.

- Invert the fuel can with installed gravity feed adapter and mount on the assembled fuel can stand so that the gravity feed adapter faces the ground. Slide the right support arm through the handle of the fuel can. Wrap the left support strap over the bottom of the fuel can. Feed the right support strap through the fuel can handle up across the front of the fuel can body, and over the left support strap. Secure the right strap to the left strap. The strap helps secure a partially filled fuel can to the fuel stand during windy conditions.

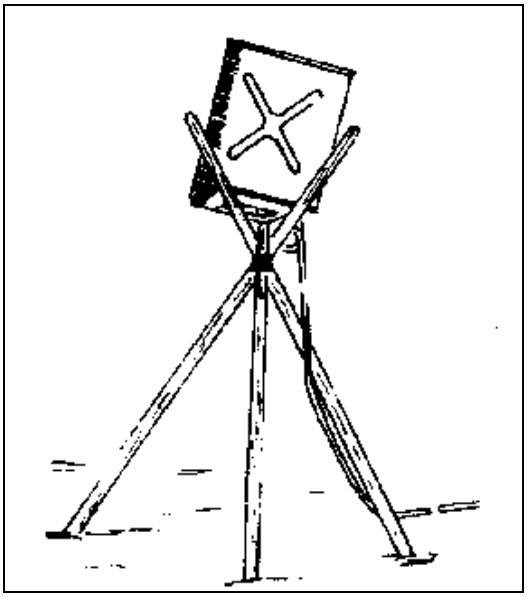

Figure 10

- Alternately, construct a fuel can tripod with three poles approximately 4.5 feet long (Figure 10). Tie these together about two-thirds of the length from the bottom, with nylon cord, rope or wire. Use a sling rope to secure the fuel can to the tripod. The height of the poles may need to be adjusted to ensure that the fuel can is two to three feet above the fuel flow control valve. If the fuel can is too high or too low, it may interfere with proper flow of fuel into the stove.
- After raising and securing the fuel can, place a drip interceptor loop in the fuel supply hose approximately 1 foot away from the fuel can. Do this by creating a loop in the fuel supply hose and securing it with rope, wire, 550-cord etc. The purpose of this loop is to prevent fuel dripping from the fuel can from traveling down the fuel supply hose and saturating the tent with fuel (thus creating a major fire hazard).
- A trash bag with HAZMAT pad should be placed under the fuel can to catch any dripping fuel.

c. Setting The Fuel Flow Control Valve:

(1) Lift fuel selector control knob on the Fuel Flow Control Valve and set in accordance with the outside temperature. There are two positions, ABOVE -25º F and BELOW -25º F. Pull the knob and rotate it to the desired position. Release the control knob, making sure that the knob locks in the indentation for the desired position.
(2) Set fuel ON/OFF control to ON.
(3) Set flow adjustment knob to HI; wait 2 to 5 minutes in order to allow the fuel flow control valve and burner up-tube to fill with fuel. This step should only be performed under conditions below -25º F (-32º C), degrees below zero. Under warmer conditions it will not be necessary to wait 2-5 minutes.
(4) Shake or tap hoses to clear any air bubbles that may be trapped in the hoses.
(5) Open the door assembly and verify that the Burner Cover Assembly has been installed in the door frame. Shut and latch the door.

d. Lighting the stove:

(1) Open the heater lid.
(2) Be sure that the down-tube is securely fitted over the up-tube inside the burner.
(3) Hold the priming cup under priming valve on fuel supply hose. Open the valve slowly and fill the cup with fuel. Shut valve when cup is full.
(4) Pour fuel into the bottom of burner. If the outside temperature is below -25º F (-32º C), pour an additional cup of fuel into the bottom of the burner.
(5) Take a short length of tissue or paper, rolled into a ball, and soak up any excess fuel that may remain in the cup. Do not discard the paper.

(6) Light the fuel soaked toilet tissue and toss it into the bottom of the burner.
(7) Use the cleaning tool, if necessary, to make sure that the burning tissue reaches the bottom of the burner where it can ignite the priming fuel. Make sure that the burning tissue remains down in the burner. Close the Lid Assembly.
(8) When the heater has warmed up sufficiently and begins to give off heat (approximately 5-10 minutes), gradually adjust the flow adjustment knob to desired heat output.

NOTE: In extremely cold conditions, if the firing rate on Hi setting is not generating sufficient heat output, tap the control valve and shake the hoses to eliminate any air that may be trapped. If output is still insufficient, turn the heater control valve to LO for 5-10 minutes, which will heat the bottom of the burner. Then turn the control valve back to the Hi position.

e. Refueling

(1) Set fuel ON/OFF control to OFF to shut down heater.

WARNING: DO NOT ATTEMPT TO REFUEL A HOT SPACE HEATER. ALLOW THE SHA TO COOL COMPLETELY BEFORE HANDLING OR REFUELING.

(2) Remove fuel can from fuel can stand and replace with a full fuel can as detailed earlier in the chapter.

(3) Restart heater.

g. Shutdown From Liquid Fuel Operation

(1) Set fuel ON/OFF control to OFF.
(2) Remove fuel can from fuel can stand.
(3) Allow equipment to cool down. •

Learning Step/Activity 8 – Place the SHA into operation utilizing solid fuels.

a. Preparation For Solid Fuel Operation:

(1) Ensure that all components have been unpacked as discussed earlier in this work package. Ensure that the heater is positioned properly in the shelter and that the stack assembly has been installed as described in the section entitled "Assembling the Stack Assembly" found earlier in this work package.
(2) Open front door and verify that the burner cover assembly is installed over the burner. If the burner cover assembly is installed in the door frame, remove it from the door frame, lift the solid fuel grate and put the burner cover in position over the burner.
(3) Make certain that the solid fuel grate is in position on its feet.

b. Preheating The Flue: To help ensure that no smoke blows back into the shelter on heater startup, the flue should be preheated by opening the door and placing 2 or 3 crumpled pieces of paper on the solid fuel gate. Ignite the paper with a match, close and latch the front door and open the draft gate. When the paper has burned completely, add solid fuel and start the heater as described below.

c. Adding solid fuel and starting the heater:

WARNING: DO NOT USE ANY TYPE OF ACCELERANT (GAS, KEROSENE, JET FUEL ETC.) TO HELP IGNITE SOLID FUEL - EXPLOSION OR UNCONTROLLED FIRE MAY RESULT.

WARNING: STACK FIRE POSSIBLE. WHEN OPERATING THE HEATER IN SOLID FUEL MODE, A BUILDUP OF CREOSOTE CAN ACCUMULATE ON THE INSIDE SURFACE OF THE STACK ASSEMBLY THAT MAY RESULT IN A FIRE INSIDE THE STACK. TO PREVENT CREOSOTE BUILDUP WHEN OPERATING WITH SOLID FUEL, THE STACK ASSEMBLY SHOULD BE

CLEANED DAILY. FAILURE TO DO SO MAY RESULT IN A FIRE CAUSING SEVERE INJURY OR DEATH.

CAUTION: WARPING OF HEATER. HEATER COMPONENTS MAY WARP FROM EXCESSIVE HEAT CAUSED BY AN OVER FUELED FIRE. WOOD AND COAL CAN BURN EXTREMELY HOT DEPENDING ON THE TYPE AND SIZE OF FUEL USED. DO NOT OVER-FUEL FIRE AND CLEAN ASHES FREQUENTLY. IF COAL IS BEING USED AS A FUEL, ADD ONLY A SMALL AMOUNT OF COAL AT A TIME. COAL IS VERY DENSE AND PROVIDES HIGH HEAT OUTPUT. OVERFILLING THE HEATER WITH COAL WILL CAUSE THE HEATER TO RUN EXTREMELY HOT AND IT WILL BE VERY DIFFICULT TO CONTROL THE HEATER'S TEMPERATURE OUTPUT.

(1) After preheating the flue as described above, open the front door and position enough crumpled paper on solid fuel grate to cover it. If using wood as a solid fuel, stack four to five pieces wood approximately ¼ to ½ inches in diameter (kindling) in a crisscross fashion on top of paper. If using coal as a solid fuel, place 10 to 12 pieces of coal that are approximately 2 inches in diameter on top of the paper.

(2) Light the paper with a match. When kindling begins to burn steadily, place 2 to 3 larger pieces of wood or a small amount of additional coal on top of kindling. Fuel may be fed either through lid or front door assembly.

(3) Shut/latch door. Keep door and lid assemblies shut except when fueling fire or removing ashes.

(4) Adjust sliding draft gate (open more to increase burn rate and close more to decrease burn rate). Monitor flame through the sight glass on the lid.

(5) Remove ashes frequently with a small pack shovel or scoop (not included with SHA) so that the ashes do not accumulate up above the solid fuel grate.

d. Adding Additional Solid Fuel

(1) Open door. Using a piece of wood or the cleaning tool, push the live burning fuel back into heater and position new fuel in front. Allow the new fuel to ignite before adding more. Add fuel until desired burn rate is reached, but do not over-fuel. It will take 5 or 10 minutes for the heater to operate at maximum after adding additional fuel. It may take some time to become familiar with the heater's burn rate as different types of wood and coal have varying moisture levels.

(2) After adding fuel, shut and latch door. Keep lid and door assemblies shut except when fueling fire or removing ashes.

e. Shutdown From Solid Fuel Operation

(1) Shut sliding draft gate on door until fire is extinguished.

(2) Allow the equipment to cool down. Perform "After Operation" PMCS.

f. Remove Ashes And Unburned Fuel

(1) After operating the SHA in Solid Fuel mode, any ashes and/or unburned fuel must be removed from the heater. To remove ashes from the interior of the heater, slide the latch to the left and open the front door.

(2) Remove the solid fuel grate and empty any ashes and unburned fuel into an approved container with a small pack shovel or scoop (not included with SHA). Clean all ashes that have accumulated on the burner cover assembly or upper deck; empty into the container. Dispose of all ashes in an approved manner.

Learning Step/Activity 9 – Recover the SHA and prepare for movement.

a. All of the component parts will fit into the stove body of the SHA with the exception of the stove board and TEF. After the stove has been shut off and has cooled completely:

(1) Ensure that the fuel flow control valve is in the “OFF” position.

(2) Remove the fuel can from the tripod. Remove the gravity feed adapter from the fuel can.

(3) Remove all fuel lines and purge them of fuel. The fuel supply hose can be connected back to itself to prevent excess fuel from leaking out.

(4) Remove the fuel flow control valve from the heater and purge of any fuel. It will be very difficult to remove all fuel from this assembly, and it is therefore recommended that the fuel flow control valve be placed in a plastic bag with a HAZMAT pad.

NOTE: The fuel flow control valve should be stored in the “ON” position to prevent the valve from sticking to the body. This is not noted in the TM, but has been put out by the manufacturer.

(5) Remove and nest stove pipes in sequence taking care to NOT align the seams.

(6) Place component parts inside stove so that door and stove body openings close and lock.

(7) Return stove to Ahkio for packing.

Learning Step/Activity 10 - Strike the Ten-Man Arctic Tent.

a. The squad leader should warn the other tent occupants 30 minutes prior to move out time. To strike the tent:

(1) 30 minutes prior, pack personal gear.

(2) No later than fifteen minutes prior all rucksacks and personal gear should be placed outside the tent, far enough out of the way that it will not hinder soldiers striking the tent. This gear should be kept organized, to preclude the danger of losing items in the snow.

(3) No later than fifteen minutes prior, the stove is shut off (using the above procedure) to allow it to cool.

(4) Remove all tent group equipment and pack into the ahkio. The last two items out of the tent are the lantern and the fire extinguisher; as long as a flame-producing device is operating in the tent, the fire extinguisher must be present.

(5) As soon as the stove body is cool enough to touch, disassemble and pack stove. Care should be taken to keep stove components out of the snow; even if the stove is cool enough to touch, it is probably still warm enough to melt snow on contact. This melted snow will re-freeze, coating the stove component(s) with ice, making it difficult, if not impossible to set up/light at your next stop.

(6) Remove all corner and eave lines, roll and secure them. As each line is undone, its corresponding tent pin should be pulled from the ground and placed into the ahkio; failure to do so may result in their becoming lost in the snow.

(7) Zip both the liner and tent doors fully closed.

(8) Remove the tent pole and pole board. Collapse the pole and place it and the pole board in the ahkio.

(9) Remove the corner eave lines from their anchors and fully extend them. Remove remaining tent pins and placed them into the ahkio.

(10) Shake the tent out to remove ice, snow and debris. Spread the tent out by pulling the apex. Fold the tent accordion-style.

(11) Daisy chain the six corner eave lines together, and place them on top of the tent.

(12) Fold the tent in half lengthwise, with the "daisy-chain" folded inside.

(13) Place the two shovels opposite one another in the center of the tent. Fold the tent into thirds and place it next to the ahkio.

(14) Remove any remaining equipment and/or trash from the tent site.

Learning Step/Activity 11 – Pack the ahkio.

a. Place tent pins in bottom center of ahkio with the heads opposite each other. Place hammers on floor of sled on either end of the tent pins, heads opposite one another.
b. Place bow saw on top of tent pins.
c. Place stove board on top of bow saw.
d. Place fire extinguisher, center pole, axe, two MSR fuel bottles and machetes on either side of the stove board, along the sides of the sled, ensuring that the weight is distributed evenly.
e. To the rear of the stove board, place fuel can and water can. Fuel can opening is up and to the rear and is double bagged with HAZMAT pads for transport.
f. Lantern (in case) is placed in front of stove board, perpendicular to the long axis of the sled. Two cook sets are placed in front of the lantern.
g. Place repair kit (ammo can) in front of the lantern. Place squad stoves on the either side of the sled next to the cook sets.
h. Place the pole board in front of the repair kit. Place the 120 foot rope, traces and harnesses on top of the pole board.
i. Place SHA on top of and slightly to the rear of the stove board.
j. Place the tent with shovels (so that the apex is toward the front of sled) on the SHA).
k. Fold two canvas ends of ahkio sled over sled contents. Fold sides of canvas over sled contents.
l. Place the tripod and door poles on top of canvas (field expedient poles only). The manufactured tripod and collapsible door poles should be secured inside the sled with the center pole. Secure the contents of sled with the lashing rope from rear to front.

b. Additional considerations

(1) This is *a* way to pack the ahkio. It is the standard used in NWTC courses and should be used when conducting ALIT. However, units may tailor the load and packing order for their specific mission.

(2) Proper weight distribution is essential when packing the ahkio. Heavy items should be placed in the bottom and slightly to the rear of center. Loading lighter equipment toward the top will prevent the ahkio from becoming top-heavy. The load should be packed in a manner which results in the lowest possible profile, again, to avoid a top heavy condition. If the center of gravity is too high, the sled will be difficult to pull, and will tend to roll over, especially when moving parallel to a slope. Tools such as shovels, axes, saws, and machetes should be packed on the sides or top for easy access when breaking trail or clearing bivouac sites.

Learning Step Activity 12 – Assemble a squad MSR (Whisperlite™) Stove.

a. As with any stove that burns fossil fuels, you must be wary of the possibility of carbon monoxide poisoning, especially when such stoves are used in small relatively airtight shelters such as snow caves or thermal shelters. Virtually all of your cooking and snow-melting tasks are accomplished using the squad stove, and one stove is adequate for the needs of from two to five soldiers. It is ideal for opening in forward or remote areas where heavy/bulky equipment could be an impediment. The squad stove is small, compact, light, and will operate on either white gas, MOGAS or kerosene.

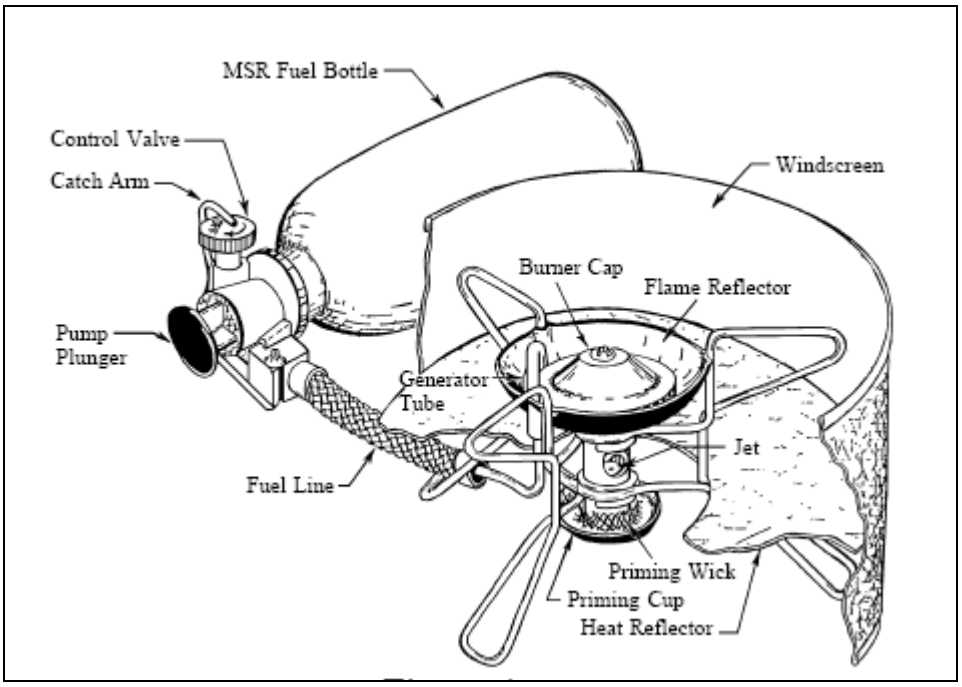

Figure 17

b. To assemble the Whisperlite™stove:

(1) Pour fuel into fuel bottle leaving a 2" air space at the top.

Figure 18

(2) Screw pump snugly into the fuel bottle.
(3) Pump 15-20 strokes to pressurize bottle; Do not over-pressurize the fuel bottle.
(4) Unfold heat reflector and insert fuel line through center hole. Guide reflector over bottom of legs.

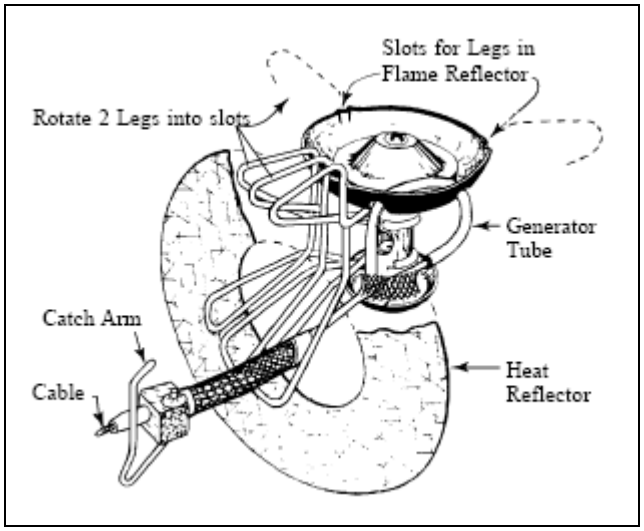

Figure 19

(5) Rotate legs clockwise until they snap into the slots on the flame reflector. Do not move leg containing fuel line.

(6) Insert fuel line into the fuel pump until securely seated. Swing catch arm into position so the latch is centered on the fuel valve on the pump assembly. Fuel line will only seat completely to pump assembly if turned to correct position; fuel line insertion “stop” will seat completely if mounted correctly.

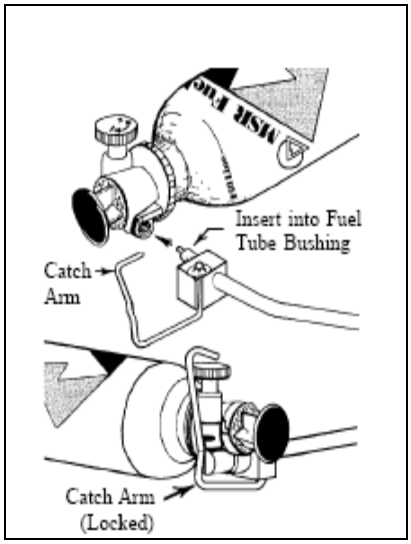

Figure 20

(7) Position stove and fuel bottle on a level, non-flammable surface.

Learning Step/Activity 13 - Operate the MSR Whisperlite Stove.

a. Do not burn stove inside tent. Keep flammable materials away from stove while operating. Keep head away from stove while lighting. Do not use stove if fuel leaks are found.

b. To operate the stove:

(1) Open control valve until fuel begins to flow through the jet and moistens the burner cup and priming wick. Immediately close the control valve.

(2) Light priming wick, and place windscreen around stove, (fuel valve is off).

(3) Allow priming fuel to burn until flame begins to diminish.

(4) Before the fuel in the primer pan stops burning, open the fuel valve slowly until the stove burner area produces a flame. Adjust to desired setting.

- If the flame burns yellow, allow more time to pre-heat/prime.
- If the stove goes out, allow the stove to cool before re-lighting.

(5) Once stove burns with a steady blue flame, adjust valve as required.

(6) Pump two or three additional pumps at a time to increase heat output when necessary. Do not over pressurize!

(7) Shut stove off by turning control valve clockwise until it stops. The flame may take several seconds to die out. DO NOT OVER-TIGHTEN CONTROL VALVE.

(8) Allow stove to cool before disassembling.

Learning Step/Activity 14 – Disassemble, refuel and store the Whisperlite stove.

a. To disassemble, refuel and/or store:

(1)Close fuel valve and allow stove to cool.

(2) Invert stove and attached fuel bottle onto a Hazardous Material Absorbing Pad.

(3) Open fuel valve and allow pressure escape from bottle; a minimal amount of fuel will drain from the stove.

CAUTION: IF STOVE HAS NOT COOLED SUFFICIENTLY, THE ESCAPING FUEL COULD IGNITE.

(4) When all pressure has escaped, close fuel valve.

(5) Invert stove and bottle.

(6) Move catch arm from position over fuel valve.

(7) Carefully pull fuel line from pump assembly. Re-fill the fuel bottle and then repeat the steps for assembly and operating; or return all components to original configuration for storage.

Learning Step/Activity 15 – Maintain the MSR Whisperlite.

a. Burner Maintenance: For the shaker jet versions, shake the stove up and down. An audible rattle should be heard – proof that the shaker jet is functioning as designed. If the rattle is not heard or you do not have a shaker jet stove, you will need to remove the jet for cleaning with the Jet Cleaning Wire.

(1) Un-screw the priming cup.

(2) Pull the generator tube out of the mixer tube.

(3) Unscrew the jet with the Jet and Cable tool. Remove the needle and clean inside the jet.

(4) Scour the fuel line. Pull the cable out of the fuel line using the Jet and Cable Tool. Wipe the cable. Push the cable in and out of the fuel line 20-30 times to scour the generator tube. Repeat scouring and wiping until clean. Reinstall cable.

(5) With the jet and needle out, flush the fuel line. Insert the fuel line into the Pump's fuel tube bushing. Open the control valve and run ½ cup of fuel through the fuel line and into a fuel container. Reassemble the stove.

b. Pump Maintenance:

(1) The leather pump will need to be periodically checked and lubricated to ensure that it can pressurize the bottle. Turn the shaft of the pump plunger below the swiveling head and pull the plunger out. Chap stick or MSR Pump cup oil will lubricate the pump cup. Rotate finger inside the pump cup to expand the diameter. Reassemble.

(2) If the pump does not hold pressure in fuel bottle, clean the check valve assembly. Turn the check valve plug counterclockwise. Remove the check valve ball and spring and wipe with a cloth. Reassemble.

(3) O-rings may crack or tear. If any of the O-rings are cracked, torn, or pitted they should be replaced prior to use.

c. For additional information on this, the MSR Whisperlite Internationale or the MSR XGK-EX contact MSR at www.msrgear.com .

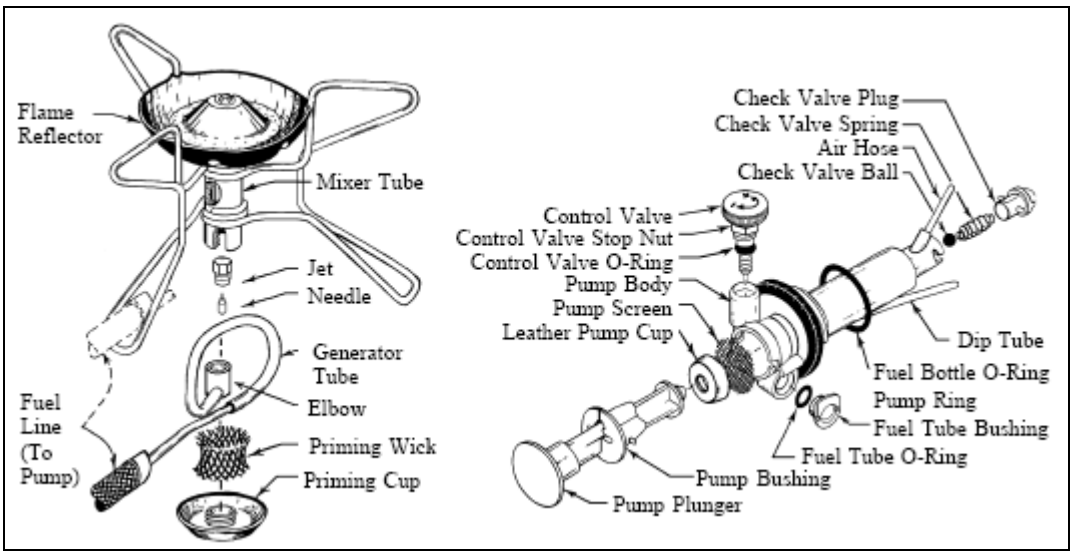

Figure 21

SECTION IV. SUMMARY

Heat and shelter are essential requirements for successful cold weather operations. You now understand how to provide shelter and heat for a squad sized element using the ten-man arctic tent and SHA.

Check on Learning.

1. Is JP-4 or gasoline an authorized fuel in any of the stoves described above?
No.

2. If the stack assembly is sticks too far out of the top of the tent opening can you remove some of the sections to make it fit better?
No. All stack sections must be used in order for the stove to operate properly.

3. How should you store the fuel flow control valve? The fuel flow control valve should be stored in a plastic bag with a HAZMAT pad. The ON/OFF valve should be stored in the “ON” position to prevent it from sticking the valve body.

SECTION II. INTRODUCTION

Motivator: Operating in a cold weather environment puts extreme environmental stresses on you. It will take you a great deal longer to perform even routine tasks and you will fatigue far faster than you would under ordinary circumstances. Your performance will improve if you can quickly prepare a heated shelter, where you have the opportunity to change your clothes, prepare hot water and food and conduct personal hygiene.

Terminal Learning Objective

ACTION	Operate the H-45 stove
CONDITION	Given a serviceable H-45 and an area large enough to set up the stove
STANDARD	Operate the H-45. Meet all critical performance measures IAW the Student Evaluation Plan.

Safety Requirements: Daily risk assessment conducted; adjustments made to clothing and warming shelter breaks/CWI checks based upon current conditions.

Risk Assessment: Moderate (Reference USARAK Pamphlet 385-4)

Environmental Considerations: POL products are utilized during this instruction. Ensure adequate measures are taken to prevent spills and that adequate materials are on hand to clean up any spills that do occur.

Evaluation: You will be tested on this lesson IAW the student/instructor evaluation plan. You will be tested on the operation of the H-45. You will also be tested on your knowledge of the H-45 during a one hour written examination at the conclusion of the course (Refer to training schedule for date/time of exam). You must score a 70% on the written exam. If you fail the written exam, you will be given a second exam after re-training has been conducted. If you fail this second examination, you will be dismissed from the course.

Instructional Lead-In: You will now learn how to assemble, operate and disassemble the H-45 stove.

SECTION III. PRESENTATION

Learning Step/Activity 1 – Explain the general characteristics of the H-45.

General Characteristics:

a. Equipment Characteristics, Capabilities And Features. (See Figure 11)

(1) The Type I (Solid Fuel) heater is designed to operate safely with either wood or coal. The Type II (Liquid Fuel) heater is designed to operate safely with either diesel fuel (DF-A, DF-1 or DF-2), or jet fuel (JP-5 or JP-8). It should be noted that there are two different H-45 stoves – the Type I which burns solid fuels only and Type II which burns liquid fuel only. At NWTC you will be exposed to the Type II Liquid Fuel H-45 only.

WARNING: OLDER VERIONS OF THE TECHNICAL MANUAL 9-4520-257-12&P STATE GASOLINE AND JP-4 ARE APPROVED FUEL SOURCES FOR USE IN THE H-45. HOWEVER, BY THE NEW TM 9-4520-257-12&P DATED 30 SEPTEMBER 2003 AND BY ORDER OF THE COMMANDING GENERAL USARAK, JP-4 AND GASOLINE WILL NOT BE USED DUE TO THE VOLATILITY OF THESE FUELS.

WARNING: THE FUEL FLOW CONTROL VALVE OF THE SHA AND H-45 LOOK SIMILAR. THESE COMPONENTS ARE NOT INTERCHAGEABLE. USING THE SHA FUEL FLOW CONTROL VALVE WITH THE H-45 OR THE H-45 FUEL FLOW CONTROL VALVE WITH THE SHA WILL CAUSE THE STOVE TO MALFUNCTION.

(2) The H-45 is used to heat all General Purpose Tents. The H-45 and component parts weigh approximately 60 pounds.

(3) The H-45 provides heat in the range of 20,000-45,000 BTU/hour. The Thermoelectric Fan (TEF) will help to circulate the heat generated by the H-45. The TEF is not issued with the H-45 and must be procured separately.

(4) ***Approved liquid fuels are JP5-8, DF-A-1-2, Kerosene and Jet A; approved solid fuels are wood and coal. Gasoline, JP-4, used motor oil, solvents or other unauthorized fuels should NEVER be used. Using unauthorized fuels will create a fire danger and potential for explosion.***

(5) One 5-gallon-can of approved liquid fuel will burn for approximately 8 hours at the maximum firing rate.

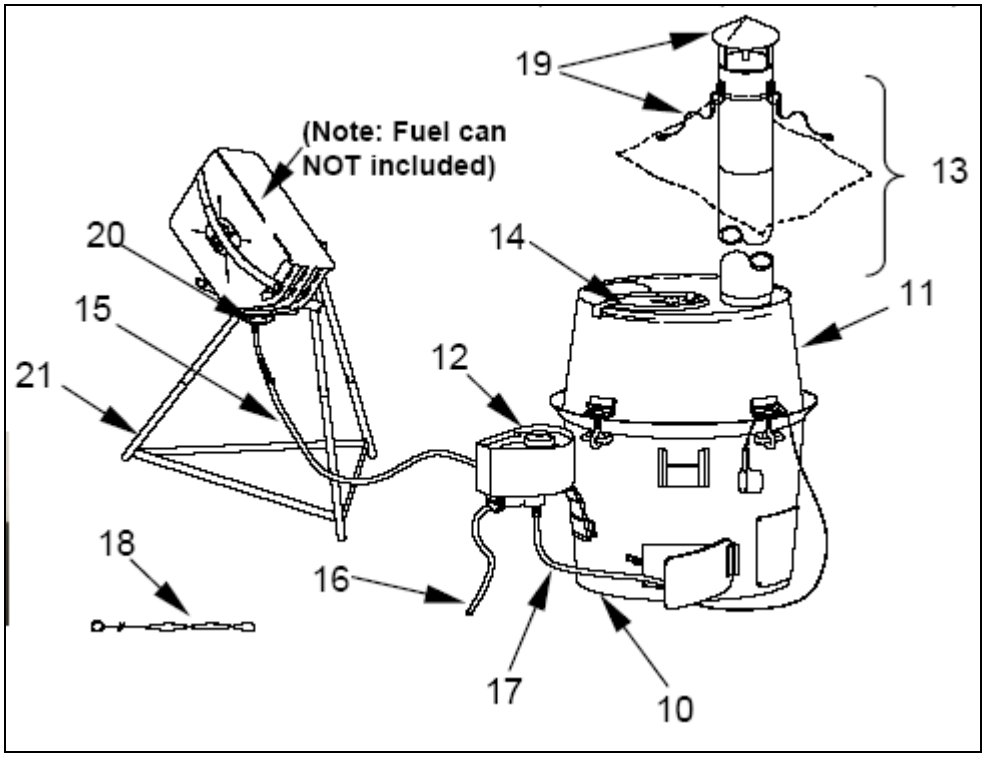

Figure 11

Learning Step/Activity 2 – Identify the components of the Type II H-45.

a. Major Components Of The H-45 Type II (Liquid Fuel) Heater (see Figure 12)

(1) Heater assembly. The Type II (Liquid Fuel) Heater assembly consists of a heater body base (1) and atop heater shell (2). The heater body base (1) serves as a base for the assembled heater. It houses the burner shell assembly (3) during operation. Two heater body base doors (4) are cut into the heater body base (1) at opposite positions to allow air for combustion. A support (5) to hold the fuel flow control valve bracket (6) is welded adjacent to the front heater body base door. Three evenly spaced bolt and wing nut assemblies (7) are welded to the heater body base (1). Three evenly spaced brackets (8) are welded to the top heater shell (2). The three bolt and wing nut assemblies (7) secure the top heater shell (2) to the heater body base (1) when the bolts are slid into the brackets (8) and the wing nuts are tightened. During the operation of the H-45 Type II (Liquid Fuel) Heater, the top heater shell (2) is placed onto the heater body base (1) and secured. The top heater shell (2) has one internally flanged, 9-inch (22.86-centimeter(cm)) circular cutout (9) to accommodate the lid (10), and one externally flanged 4-inch (10.16-cm)cutout (11) that serves as mounting for the stack pipe sections (12).

(2) Burner shell assembly and adapter ring. The burner shell assembly (3) fits into the heater body base (1). It consists of a rolled steel pot (13) with a high fire ring (14), a burner cap assembly (15), and a super heater assembly (16). An adapter ring (17) that engages the upper rim of the heater body base (1) is welded to the burner shell assembly (3). The high fire ring (14) is held in place by three clamps (18) that attach to the adapter ring (17) with pan head screws. A cleaning tool (19) is used to clean soot and any buildup from the inside of the up-tube and down-tube.

(3) Fuel flow control valve. The fuel flow control valve (20) is mounted on the side of the heater body base (1). The fuel flow control valve (20) is designed to function with JP-8; DF-A, DF-1, or DF-2; JP-5; kerosene; Jet A-1; Jet A; gasoline (emergency only); and JP-4 (emergency only). It has several orifices to match the various viscosities of the fuels being used. The orifices are cut to permit a maximum and minimum flow rate consistent with the safe operation of the heater.

(4) Exhaust system. The exhaust system consists of six stack-pipe sections (12) connected end to end, leading from the 4-inch (10.16-cm) externally flanged circular cutout (11) on the top heater shell (2), through the tent roof (21), and topped by a stack cap assembly (22), to which three wire ropes and guy lines (23) are attached to provide stability.

(5) Hose assemblies. The hose assemblies conduct fuel from the fuel source to the fuel flow control valve(20), from the fuel flow control valve (20) to the burner shell assembly (3), and from the fuel flow control valve (20) to the overflow area.

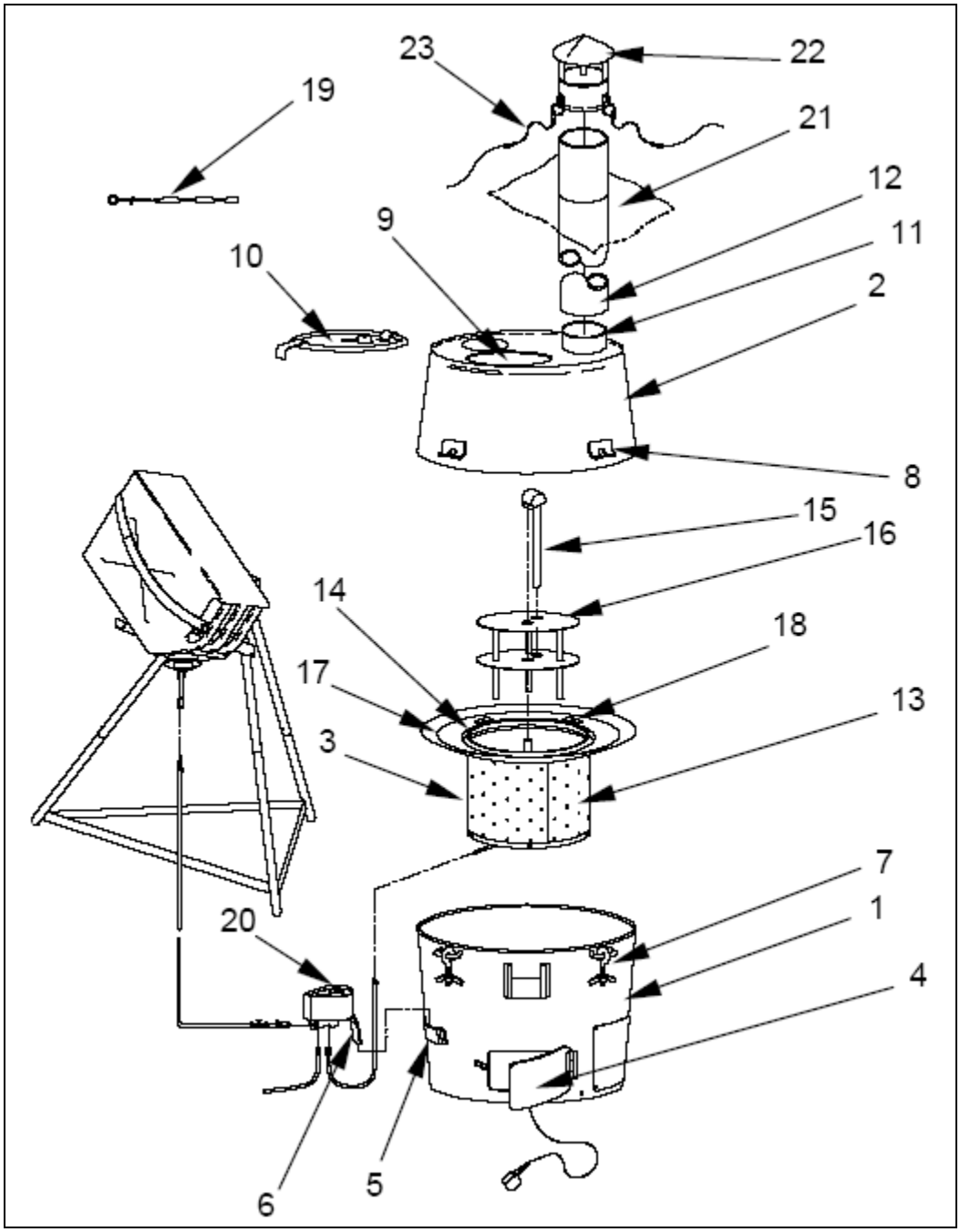

Figure 12

- Fuel Supply Hose. The fuel supply hose connects between the fuel can gravity feed adaptor and the fuel flow control valve. It supplies fuel to the H-45. A “T” connector with petcock permits fuel to be drained off into the measuring cup for priming.

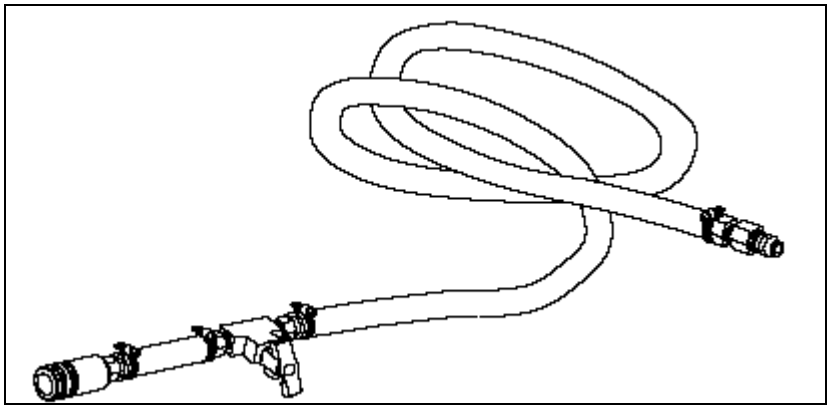

- Fuel Overflow Hose. The fuel overflow hose connects to the fuel flow control valve and allows any overflow fuel to be sent outside the shelter.

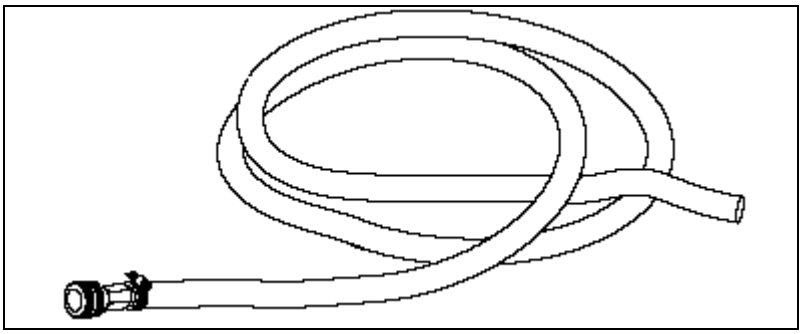

- Flow Control Burner Hose. The flow control burner hose connects to the fuel flow control valve and supplies the fuel to the burner shell assembly.

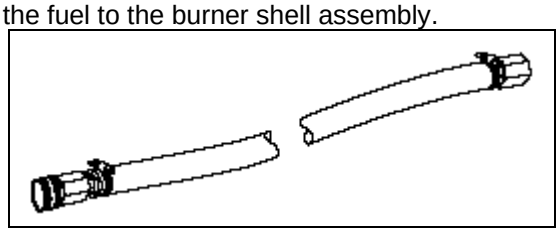

(6) Fuel Can Stand. The fuel can stand supports a standard plastic fuel can in an inverted position in order to gravity feed fuel to the heater. The stand disassembles and folds for packing.

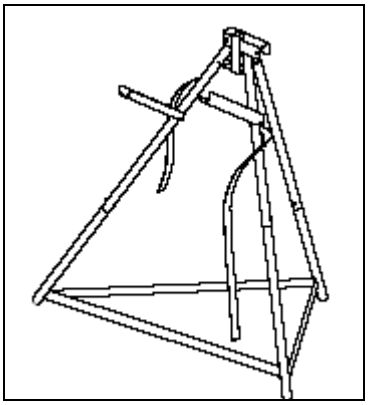

(7) Gravity Feed Adapter. This adapter installs in a standard issue plastic fuel can and permits fuel to flow by gravity from the fuel can to the H-45 Type II (Liquid Fuel) Heater.

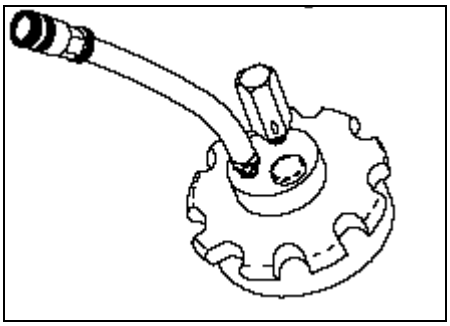

(8) Thermoelectric Fan (TEF), Optional. The TEF is an optional component of Type II (Liquid Fuel) Heater. The TEF generates its own power from the heat generated by the heaters and is placed on the indented area on the top heater shell of theH-45s.

Learning Step/Activity 3 – Assemble the Type II H-45.

a. Install and assemble the heater. (see Figure 13)

<u>WARNING:</u> If the heater has not been used before, you will have to completely assemble the heater outside of the tent (to include the six-section stack assembly and tie down), *burn off the protective film*, allow the heater to cool, disassemble the heater, and then move the heater inside the tent. Make sure you allow enough at least 4 feet of air space between the tent walls and the heater unit. While in operation, the heater exterior will become very hot. Frequently check for heating of the tent walls while the heater unit is in use. If the tent walls become too hot, the heater needs to be shutdown, allowed to cool, and moved to a tent stack shield opening location farther away from the tent walls, if available. Failure to follow these procedures could result in the heater igniting the tent.

NOTE: For best operation, be sure that the heater is as level as possible.

(1) To prepare the H-45 Type II (Liquid Fuel) Heater for operation (after the protective film has been burned off), place the heater on the ground under a tent stack shield opening. If used on top of a tent floor, the heater must be set on a bed of sand or placed on three or four bricks. Level the base by eye. NWTC uses a sawed off 55 gallon drum with dry sweep as a base.

(2) Open the front base heater door (1), pull the priming cup (2) on the retainer wire (3) out of the heater body base until the wire is fully extended, and set aside.

(3) Remove the top heater shell (4) from the heater body base (8) by loosening the wing nuts on the bolt and wing nut assemblies (21) and sliding them out of the brackets (22) on the top heater shell (4). Set the top heater shell (4) aside. If not already done, remove all the components stored inside the heater.

(4) Replace the burner shell assembly (5) in the heater body base (8). If necessary, rotate the burner shell assembly (5) to ensure that the pipe nipple (6) aligns with the left side of the front base heater door opening (7) in the heater body base (8). Pull the flow control burner hose (9) through the front base heater door opening (7). The burner shell assembly (5) and adapter ring (10) welded to its top must be level and fully engaged all around the circumference of the heater body base (8).

(5) The superheater (11), burner cap assembly (12), and high fire ring (13) are all installed when shipped. Ensure that these parts are in place as illustrated.

(6) Insert the fuel flow control valve (14) into the bracket holder (15) on the heater body base (8).

(7) Attach the free end of the flow control burner hose (9) to the flow control outlet (16) on the bottom of the fuel flow control valve (14). To do this, pull back on the female Quick Disconnect (QD) fitting on the end of the flow control burner hose (9), insert it on the flow control outlet male QD fitting, and release the female QD fitting. Gently pull on the flow control burner hose to ensure the connection is secure.

(8) Attach the female QD fitting on the fuel overflow hose (17) to the fuel overflow male QD fitting (18) on the fuel flow control valve (14). To do this, pull back on the female QD fitting on the fuel overflow hose (17), insert it on the fuel overflow male QD fitting (18) on the fuel flow control valve (14), and release the female QD fitting. Gently pull on the fuel overflow hose to ensure the connection is secure. Set the free end of the fuel overflow hose aside.

(9) Connect the female QD fitting (19) on the fuel supply hose (23) to the fuel supply male QD fitting (20) on the fuel flow control valve (14). To do this, pull back on the female QD fitting (19) on the end of the fuel supply hose (23), insert it on the fuel inlet male QD fitting (20), and release the female QD fitting (19). Gently pull on the fuel supply hose (23) to ensure the connection is secure. Set the free end of the fuel supply hose (23) aside.

(10) Place the top heater shell (4) on the heater body base (8). Place the bolt and wing nut assemblies (21) in the brackets (22) on the top heater shell (4) and tighten the wing nut.

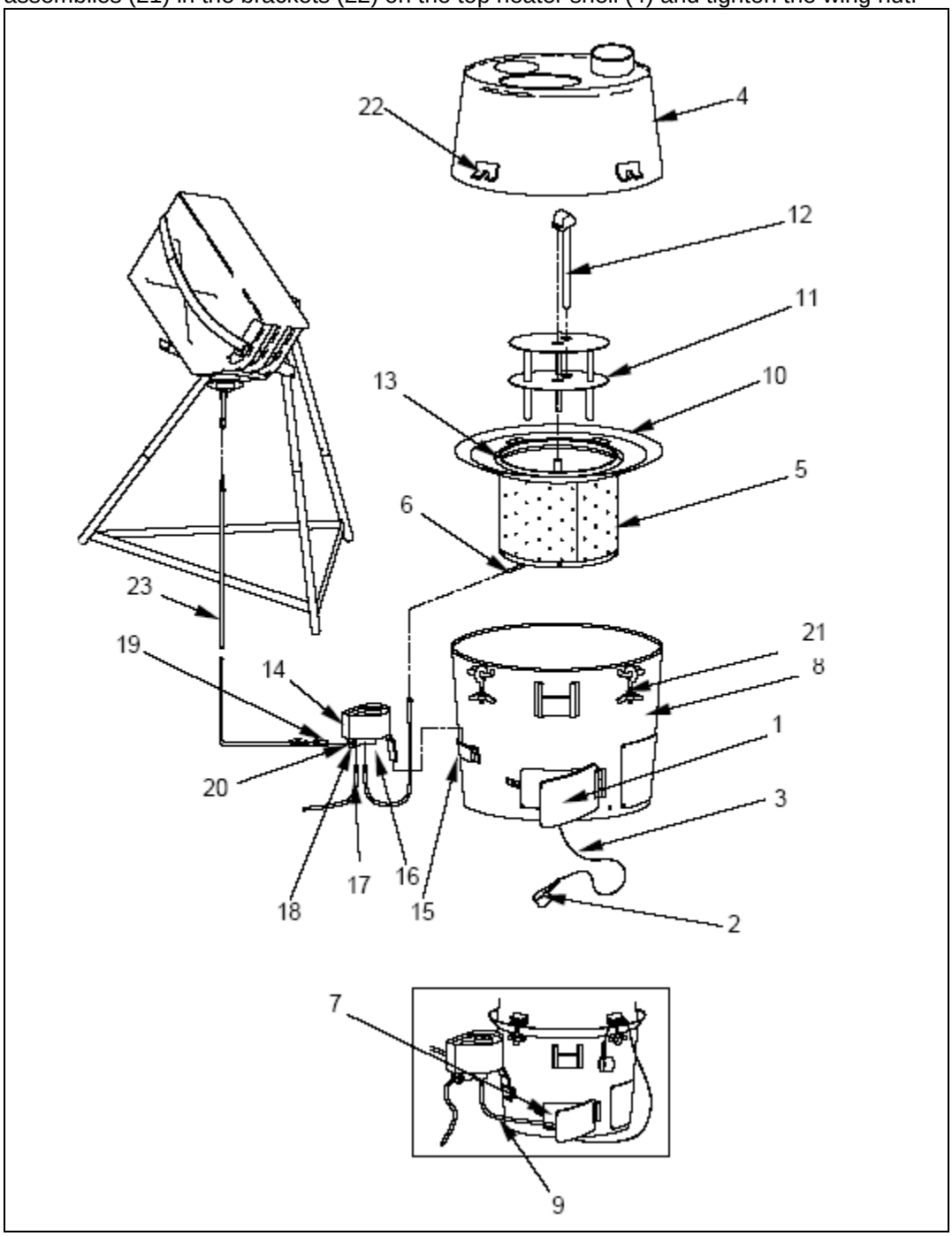

Figure 13

b. Assemble The Stack. (See Figure 14)

WARNING: Ensure the stack pipe sections seat together securely. Poorly fitted stack sections may allow a hot stack to fall on the tent and start a fire or allow deadly carbon monoxide to leak into the tent. It is important to stake the exhaust stack securely since this will keep the exhaust stack vertical and seated firmly within the stack adapter with a downward force. This also stabilizes the heater and helps prevent it from being knocked over if bumped by equipment or people inside the tent. The tent needs to be securely staked to prevent the tent roof and walls from flapping during snowy and windy conditions. If the tent itself is not tightly staked, the roof and sidewalls can flap, getting close to the heater and creating a fire danger. Refer to the tent-specific operator manual on

the proper staking of the tent. During operation, the H-45 heater produces harmful carbon monoxide and other gases. Carbon monoxide is a colorless, odorless, and tasteless gas. Remember that although carbon monoxide has no telltale odor, it may mix with other odors that mask its presence; therefore, carbon monoxide can be present within a mix of seemingly harmless odors.

Mild cases of carbon monoxide poisoning can cause symptoms such as nausea, dizziness, or headaches. Severe cases of carbon monoxide poisoning can result in brain damage, heart damage, or death.
To prevent carbon monoxide poisoning, ensure that the H-45 heater exhaust stack sections fit together snugly and that the exhaust gases are properly vented through the roof of the tent. Keep the H-45 heater in good working order. Ensure that all possible sources of carbon monoxide leakage have been repaired and that the operating space is well ventilated.

NOTE: All six stack pipe sections and stack cap assembly must be assembled, put securely in place on the top heater shell flange, and tied down during heater operation. Failure to use all six sections will adversely affect heater performance, increase soot buildup, and increase maintenance.
The type of tent, use of a step aid (if available), and height and strength of the persons assembling the stack may alter the following stack assembly procedures.

(1) When the H-45 Type II (Liquid Fuel) Heater is first delivered, the stack assembly sections are provided as curved sheet metal sections. They must be formed into cylinders and their seams locked. Refer to the section entitled “Assembling the Stack Sections for the H-45 Type II (Liquid Fuel) Heater” in the Technical Manual for information on assembling the sections before initial use.
(2) Outside the tent, roll back the flap (12) on the tent stack shield opening (11), and tie it back securely. (Refer to the tent-specific operator manual for this procedure.)
(3) Inside the tent, securely install the uncrimped end of one of the stack sections onto the crimped end of another stack section (8-3). Securely install the stack cap assembly (1) with the attached guy lines (2) onto the crimped end of the stack section (3).
(4) Insert the stack cap and attached guy lines through the tent stack shield opening.
(5) Securely install the bottom of the stack assembly (8) onto the flange (9) on the top heater shell.
(6) One person should remain in the tent stabilizing the stack assembly, while two other persons go outside the tent and retrieve the three guy lines (2) from the roof of the tent.

NOTE: The use of a long stick or other such object (not supplied with the H-45) may be needed to retrieve the guy lines from the tent roof. Once the guy lines are retrieved, additional lengths of rope (not supplied with the H-45) may have to be added to the end of each guy line before the ropes can be anchored to the tent.

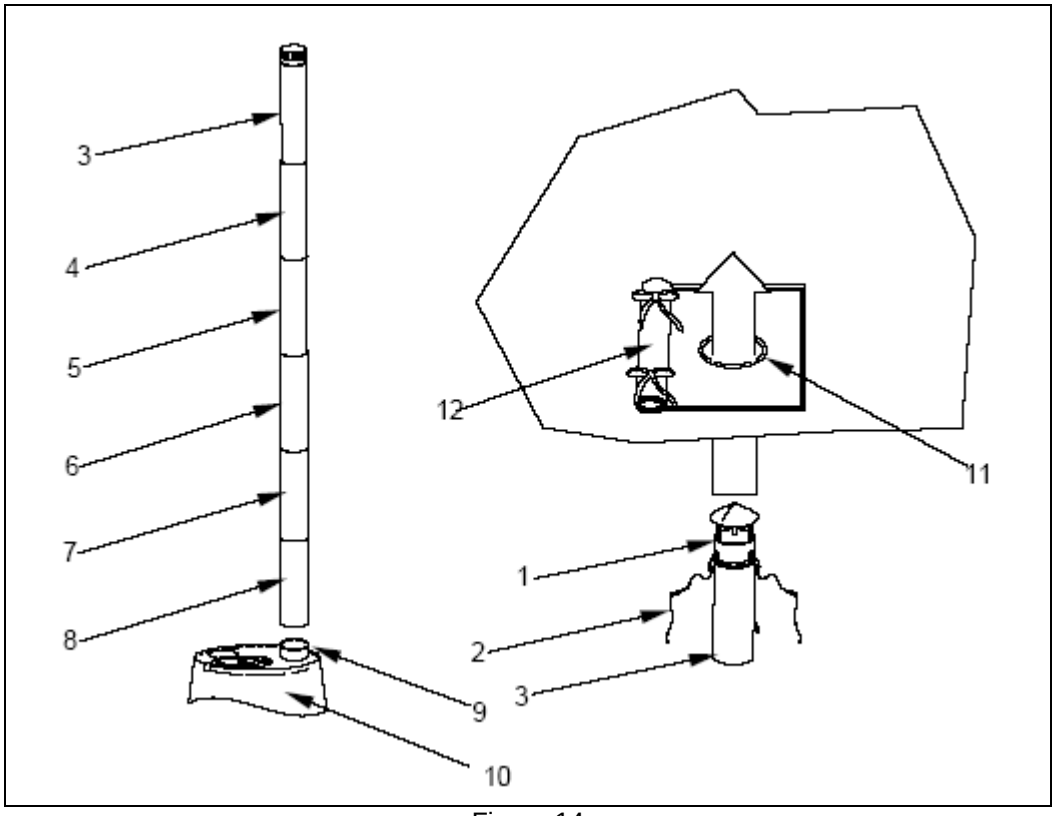

Figure 14

c. Prepare a Fuel Supply Site. Prepare the fuel site as for the SHA. All considerations that apply for the SHA also apply for the H-45.

Learning Step/Activity 4 - Start and operate the Type II (Liquid Fuel) H-45.

a. Starting and Operating the H-45. (See Figure 15)

(1) Open both base heater doors (1, 2).

(2) Set the fuel selector control knob (6) to the proper position for the ambient temperature and the fuel being used as described in WP 0004 00, Table 2. Once the temperature and fuel are determined, lift the fuel selector control knob (6), and turn the entire control assembly until the fuel selector control knob (6) engages in the detent. Release the fuel selector control knob (6).

(3) Turn the fuel OFF/ON control (7) on the fuel flow control valve (8) to the ON position.

NOTE: The flow adjustment knob (9) on top of the fuel flow control valve increases the fuel flow when turned clockwise and decreases the fuel flow when turned counterclockwise.

(4) Turn the flow adjustment knob (9) to the HI position. Wait 5 to 10 minutes for the flow control burner hose (11) and burner uptube (10) to fill with fuel. Shake and tap the hoses (11,15) to free any air that may be trapped in the hoses. Turn the flow adjustment knob (9) back to setting “3.”

(5) Using the 4-ounce cup (12) attached to the retaining wire (13), open the priming valve T-connector (14) on the fuel supply hose (15), and carefully fill the cup with fuel. Remove the lid assembly (18), and pour one 4-ounce cup of fuel into the bottom of the burner shell assembly (16) through the lid assembly opening.

NOTE: When operating with diesel fuel or JP8 in very cold temperatures, if problems are experienced getting the heater to light or to continue burning, it may be necessary to repeat step 5. Make sure the flame is out completely and the heater is cool before adding additional fuel. NEVER add additional fuel when the burner is lit or hot.

(6) Roll a piece of tissue paper, or similar material, into a ball approximately 2 inches in diameter. Use the paper to wipe the cup (12) to remove any remaining fuel. Do not discard the paper. It will be used when lighting the heater.

WARNING: Keep your hands and face away from heater lid opening when lighting the burner to prevent getting burned. If the flame is accidentally extinguished, WAIT UNTIL THE BURNER COOLS BEFORE RELIGHTING. NEVER LIGHT A HOT HEATER. LIGHTING A HEATER THAT HAS NOT COOLED COULD RESULT IN AN EXPLOSION.

NOTE: Check all three hoses, the fuel flow control valve, and the gravity feed adapter for leaks before and after lighting the heater. Make sure that all QD fittings are securely engaged. If a leak occurs while the heater is in operation, shut down the heater immediately, and notify your supervisor if the leak cannot be corrected.

(7) When lighting the burner with JP-8, diesel, JP-5, kerosene, Jet A-1, or Jet A fuel, place the tissue paper used to wipe the cup (12) on the top of the heater near the edge of the heater lid opening. Light the tissue paper, and push the paper into the burner shell assembly, making sure it goes to the bottom of the burner shell assembly (16). The burner reaming tool (17) can be used to force the burning paper to the bottom of the burner shell assembly (16) if necessary. Replace the heater lid immediately.

NOTE: If fuel flow is slow, shake and/or tap the hoses to eliminate any air bubbles.

(8) With the fuel flow adjustment knob at setting “3,” wait until the burner shell assembly warms up before increasing the fuel flow with the fuel flow adjustment knob.

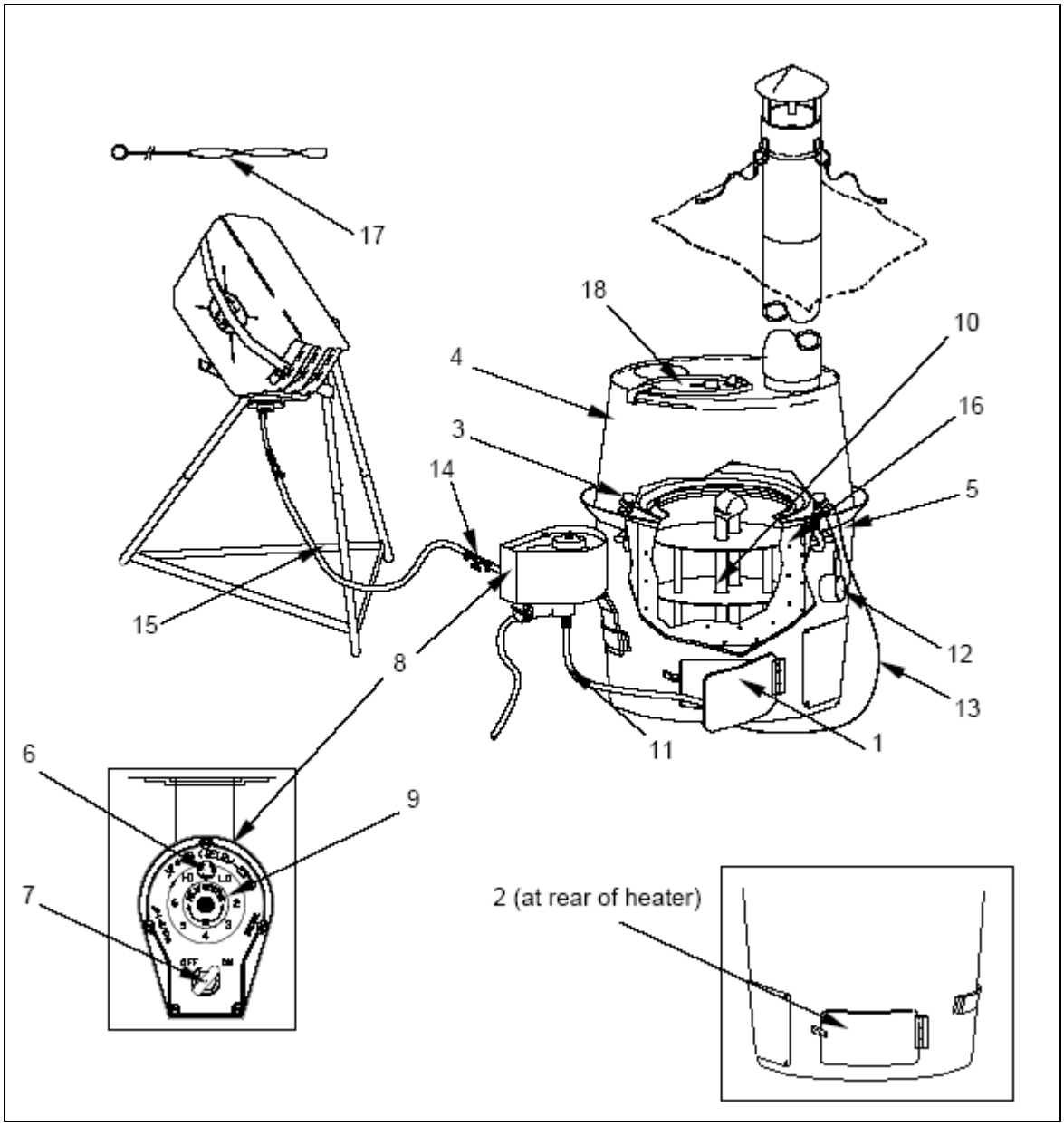

Figure 15

NOTE: The heater is designed to operate at various firing rates, producing between 20,000 to 45,000 BTUs. A smoking, pulsing, or sooty heater indicates an overfire or underfire condition.

NOTE: Viscosity of liquid fuel is not consistent at all times and locations. If the heater appears to be overfiring at high settings or underfiring at low settings, adjust the fuel flow adjustment knob **(4)** counterclockwise or clockwise until the flame is clear, no smoke or soot is observed, and the pulsing stops. (See Figure 16)

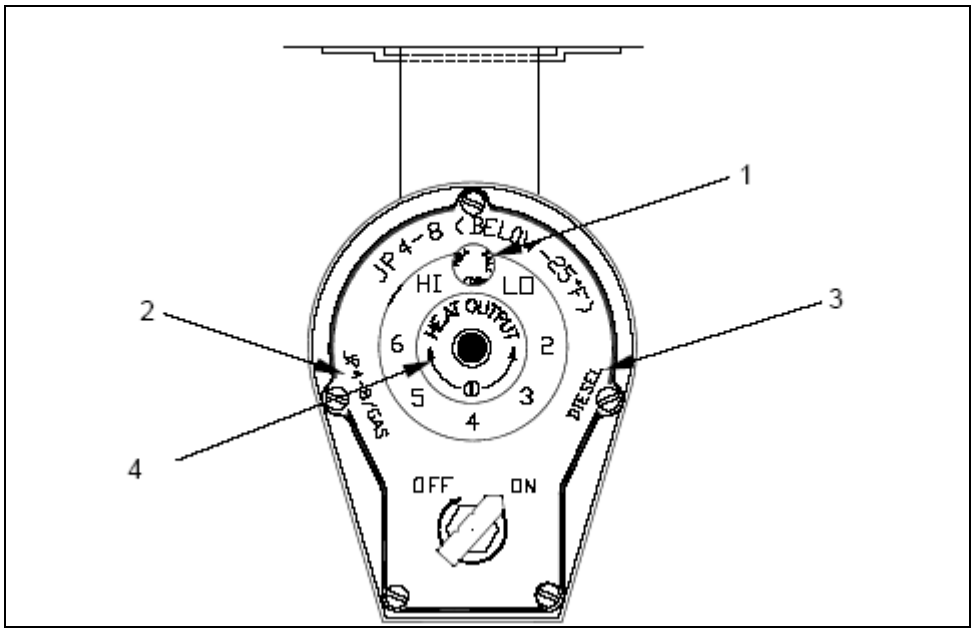

Figure 16

b. Changing Fuel Can.

WARNING: Do not exchange heater unit fuel can unless the heater is turned off. Do not smoke, and ensure that there is no open flame in vicinity. Fire or explosion may result.

(1) Turn fuel ON/OFF control to the OFF position.
(2) Remove empty fuel can from stand and set upright on ground.
(3) Remove gravity feed adapter kit from empty fuel can.
(4) Install adapter kit into full fuel can, insuring that the gasket on the adapter stays in place during installation. Wipe excess fuel from the washer, washer seat, and the lid of the fuel can.
(5) Place fuel can in an inverted position on fuel can stand or other support, not less than 2 feet and no more than 3 feet above fuel flow control valve.
(6) Wait until the stove has cooled and light the stove using proper lighting and operating procedures.

Learning Step/Activity 5 - Shut down, recover, and store the H-45.

a. Shutdown procedures:

(1) Turn fuel ON/OFF control to the off position.

(2) Remove fuel can from stand and set upright on ground.

(3) Let the stove cool.

(4) Set fuel can on ground and disconnect adapter kit. Replace fuel can cap.

(5) Disconnect supply flow control hose assembly from adapter kit and fuel flow control.

(6) Disconnect flow control-burner hose assembly from fuel flow control. Remove fuel flow control and bracket and purge of any fuel. It will be very difficult to remove all fuel from this assembly, and it is therefore recommended that the fuel flow control valve be placed in a plastic bag with a HAZMAT pad. The fuel flow control valve should be stored in the “ON” position to prevent the valve from sticking to the body.

(7) Remove and separate stack cap assembly, tent lines, and stack pipes from each other.

(8) Loosen three wing nuts holding top heater shell to heater body base and remove top heater shell.

(9) Remove burner shell assembly from heater body base.

(10) Clean all components of soot, carbon buildup and fuel residue.
return burner shell assembly to heater body base.

(11) Return top heater shell to heater body base and secure with bolts and wing nuts.

(12) Open lid and return all accessory components to heater body base.

SECTION IV. SUMMARY

You can now maintain and operate a H-45 Type II Liquid fueled stove.

Check on Learning.

1. Is JP-4 or gasoline an authorized fuel in the H-45?
No.

2. If the stack assembly is sticks too far out of the top of the tent opening, can you remove some of the sections to make it fit better?
No. All stack sections must be used in order for the stove to operate properly.

3. How should you store the fuel flow control valve? The fuel flow control valve should be stored in a plastic bag with a HAZMAT pad. The ON/OFF valve should be stored in the “ON” position to prevent it from sticking the valve body.

SECTION II. INTRODUCTION

Motivator: Soldiers have successfully lived, worked and fought in cold weather environments. The Army provides the proper clothing and equipment to clothe, sleep and warm soldiers. In most situations the supply system provides the resources to sustain soldiers throughout field exercises.

In certain situations, however, you may find yourself separated from traditional sustainment equipment. Do you have what it takes to survive through a night or longer in temperatures of -20 degrees without a support base? The improvised shelters that you will learn about in this lesson are designed to keep you fully mission capable in the absence of traditional support methods.

Terminal Learning Objective

ACTION	Utilize improvised shelters
CONDITION	In a snow covered environment with temperatures of 10 degrees F or colder, given a bow saw, parachute, 100 feet of 550-cord (thermal shelter only), shovel(s), ECWCS, other issued cold weather clothing items, issued cold weather sleep system with insulating pad and other equipment prescribed by unit
STANDARD	Construct an improvised shelter. Sleep in the shelter for approximately 8 hours without the aid of an external heat source. Do not receive a cold weather injury during the bivouac. Meet all critical performance measures IAW the student evaluation plan.

Safety Requirements: Instructors are required to remain with the squad during all bivouacs to ensure that students are adhering to control measures aimed at preventing cold weather related or other environmental injuries. A minimum of two medics will be on site to conduct checks of personnel for cold weather and other illness/injuries. At a minimum, each student will be evaluated by medics the morning following any bivouac. More checks may be conducted as dictated by NCOIC/OIC or 1SG/Commandant dependent upon weather conditions. Squad instructors will also conduct periodic physical checks of students throughout the training cycle. The frequency of these checks is dependent upon the weather conditions. Students will place boots in sleeping bag for duration of bivouac. A heated shelter will be available to students; students should be aware of how to get to this shelter from their improvised shelter.

Risk Assessment: Medium (Reference USARAK Pamphlet 385-4)

Environmental Considerations: In USARAK, trees greater than 4 inches in diameter, in military training areas, will not be cut down without prior approval from Range Control.

Evaluation: You will be tested on your ability to construct and live in a thermal shelter during the course in session. You will also be tested on your knowledge of improvised shelters during a one hour written examination at the conclusion of the course (Refer to training schedule for date/time of exam). You must score a 70% on the written exam. If you fail the written exam, you will be given a second exam after re-training has been conducted. If you fail this second examination, you will be dismissed from the course.

Instructional Lead-In: This lesson provides you with techniques to construct and use improvised shelters that will protect you from cold weather.

SECTION III. PRESENTATION

Learning Step/Activity 1 – Construct a thermal shelter.

a. The Thermal Shelter.

(1) The thermal shelter is primarily designed as a one to two person shelter; a larger shelter can be constructed to accommodate a small team or squad. In forested areas, a wooden framework is normally built and covered with a parachute, ponchos, evergreen boughs, etc. This structure is then covered with about 8 to 10 inches of snow for insulation.

(2) Aside from the obvious benefits gained during survival situations, the shelter can also be built to enhance forward fighting positions, LP/OPs, and other static positions away from the patrol base. The shelter will increase soldier comfort and lengthen the time a team can remain at these perimeter positions. Because the conditions within the shelter are reasonably comfortable without the use of additional heat sources, use of thermal shelters in static positions may provide an excellent alternative to using heated shelters when detection by infrared and other thermal devices must be avoided.

(3) The shelter actually becomes more efficient as the outside temperature decreases. Inside one of these shelters, temperatures of +5°F have been measured with an outside air temperature of -40°F. This was achieved solely by the shelters capacity to retain emitted thermal radiation; there was no additional heat provided by personnel, stoves, or candles. If a candle or stove is used in the shelter, the door must be cracked open or a ventilation hole must be added during construction.

(4) The key to construction is to remove the snow from the ground surface, exposing the frozen soil which will then radiate thermal energy into the shelter. The doorway is best sealed by filling a trash bag or other large sack with loose snow and form-fitting it into the door opening. A rucksack or other bulky item can also be used.

b. Thermal Shelter Construction.

(1) Remove snow and ice exposing ground surface.
(2) Construct framework from available materials.

Figure 1: Framework

(3) Ensure front and sides of framework have enough slope to retain snow
(4) Frame door opening large enough so a heavily clothed soldier will fit.
(5) Door opening should be I or 2 ft. above ground to ease entry and exit.
(6) Cover framework with poncho, parachute, evergreen boughs, or other suitable material, ensure material extends I or 2 ft. beyond skirt of framework.

Figure 2: Covering the framework

(7) Secure material at skirt with logs, rocks, snow, etc.
(8) Cut a hole in material over door opening so material overlaps door frame.
(9) Lash material to door frame for a secure fit.
(10) Tie a 10- 12 in. diameter log or bundle of sticks above door frame to support snow load.
(11) Cover entire framework with 8- 10 inches of snow.
(12) Fill a trash bag or waterproof bag with snow and form-fit to plug door opening; a rucksack filled with extra clothing, etc., will also work fine.

Figure 3: Finished Thermal Shelter

Learning Step/Activity 2 – Bivouac in a thermal shelter.

a. Set up the thermal shelter for bivouac prior to entering the shelter as the shelter is small and difficult to maneuver in:

(1) Lay a poncho on the ground (optional).
(2) Place insulated sleeping mat followed by sleeping bag.
(3) Place most equipment outside of the thermal shelter; items that will be needed at first call, for a guard shift or that need to remain warm (equipment batteries, clothing etc.), should be brought into the shelter and placed in the sleeping bag.
(4) Undress in the sleeping bag and keep the clothing in the bag with you.
(5) Place boots in the sleeping bag with you.

b. A candle or squad stove can be used to warm the shelter ***prior to entering the shelter***; these items must be extinguished when soldiers enter the shelter for the rest cycle or for any extended length of time.

CAUTION: REMEMBER TO ADD A COUPLE OF SMALL VENTILATION HOLES IF YOU ARE GOING TO BURN CANDLES, STOVES, ETC.

CAUTION: IT'S ALWAYS BEST TO LEAVE A SMALL CRACK IN THE DOOR OPENING TO ENSURE ADEQUATE VENTILATION EVEN IF STOVES OR CANDLES ARE NOT USED.

CAUTION: EXTINGUISH ALL FLAMES PRIOR TO ENTERING THE SHELTER FOR ANY LENGTH OF TIME.

Learning Step/Activity 3 – Construct a snow cave.

a. Snow caves are relatively easy to build provided there is enough snow of the proper quality available. Snow caves have many advantages:

(1) More easily concealed than tents
(2) Display almost no thermal signature
(3) Easy to conceal
(4) Because of the white reflective walls, are easily illuminated
(5) Simple to build
(6) Comfortable
(7) Are very warm

b. Snow caves require a large snow bank or drift, and it is important to choose this carefully and estimate the depth of the snow before starting work: examination of the ground behind the snow bank, protruding saplings, wind blown ridges, and exposed moss surfaces and rock are often a useful guide. For a 2 or 4 man cave a drift 10 feet wide and 7 feet deep is needed. Larger caves require proportionally larger drifts. A snow cave can be built either by tunneling or by building it up with blocks. Here are a few principles to observe:

(1) The top of the entrance should be lower than the sleeping bench. This will ensure that warm air is trapped around the occupants.

(2) The ceiling should be arched and smooth to prevent dripping. Ceilings will melt back with age and the internal dimensions of the shelter will increase.

(3) At least one snow shovel should be kept inside each snow shelter so you can dig out if the cave or entrance collapses. Another shovel should be kept outside the entrance.

(4) Every snow shelter must have a permanently open ventilation hole in the roof or walls. A hole made with a ski pole is suitable for this.

(5) Building snow caves follows no firm rules as the depth and condition of the snow will vary and the tactical needs may dictate the type and degree of comfort which can be achieved.

c. The Tunnel Method.

(1) A tunnel is made into the snow bank. Initially only one man can work but later two can be employed. The front man tunnels while the second clears the excavated snow away from the entrance. Having dug in approximately two meters, the location of the sleeping bench must be decided. If there appears to be plenty of snow, it is best to have a sleeping bench on either side of the tunnel lying along the axis. If the snow bank is narrow, it may be necessary to have the sleeping bench at right angles to the tunnel. A snow block can be used to seal the entrance but care must be taken to ensure that a ventilation hole is kept open. (See Figure 4)

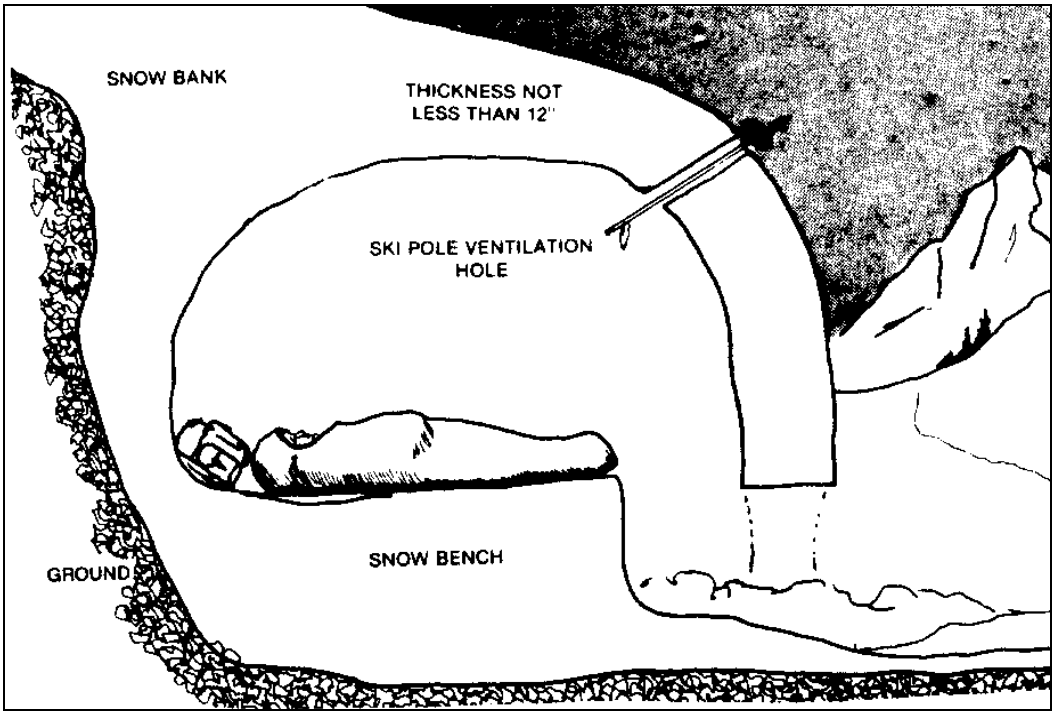

Figure 4: Tunnel Method

d. The Block and Cave Method.

(1) If the snow is easy to cut into blocks, the block and cave method should be used. The principles for deciding the internal layout are the same as for tunneling. Having decided on the total internal width of the snow hole, digging can proceed straight into the snowdrift all along the width. There is plenty of room to work and several men can work together while one man digs the entrance tunnel to the side of the main excavation.

(2) Once the snow hole is completed and the sleeping benches and stove position determined, the cave can be sealed with snow blocks. These are best cut during the last stages of excavation as the snow is usually more densely packed inside a drift. Using snow blocks from this area reduces the amount of snow moving. (See Figure 5)

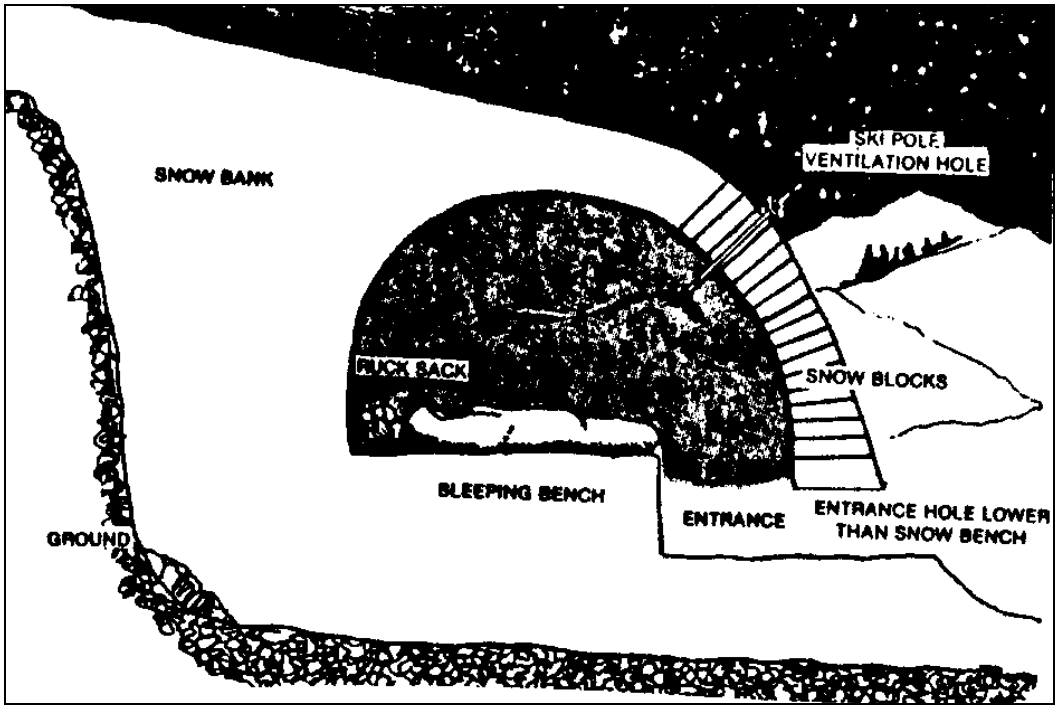

Figure 5: Block and Cave Method

Learning Step/Activity 4 – Bivouac in a snow cave.

a. Snow caves generally have more room than a thermal shelter. Equipment can be brought into the cave if there is enough room; ideally most equipment should remain packed and ready and stored outside the shelter. A poncho can be placed on the bench; the bivouac cover for the MSS is recommended. Place insulated sleeping mat followed by sleeping bag.

b. The soldier should undress in the sleeping bag and keep the clothing in the bag with him. This is especially true of boots; these must be kept in the sleeping bag with the soldier.

c. A candle or squad stove can be used to warm the shelter prior to entering the shelter; these items must be extinguished when soldiers enter the shelter for the rest cycle or for any extended length of time.

CAUTION: REMEMBER TO ADD A COUPLE OF SMALL VENTILATION HOLES IF YOU ARE GOING TO BURN CANDLES, STOVES, ETC.

CAUTION: IT'S ALWAYS BEST TO LEAVE A SMALL CRACK IN THE DOOR OPENING TO ENSURE ADEQUATE VENTILATION EVEN IF STOVES OR CANDLES ARE NOT USED.

CAUTION: EXTINGUISH ALL FLAMES PRIOR TO ENTERING THE SHELTER FOR ANY LENGTH OF TIME

CAUTION: DO NOT BUILD A SNOW CAVE IF THE SNOW WILL NOT SUPPORT ITSELF WHILE TRYING TO CONSTRUCT THE CAVE ENTRANCE (I.E. THE SNOW COLLAPSES WHILE DIGGING THE ENTRANCE TUNNEL). IF THE SNOW COLLAPSES SELECT A DIFFERENT SITE OR CONSTRUCT A QUNIZHEE SHELTER.

Learning Step/Activity 5 – Construct a Quinzhee Shelter.

a. In alpine regions and other barren conditions, shelter can be constructed by piling up a large mound of snow and then digging into it. Even light powder snow will solidify enough once it is disturbed and shoveled into a mound. This variation to the Thermal Shelter, similar in appearance to a snow cave, is referred to as a molded-dome shelter or "Quinzhee Shelter".

b. Although the quinzhee shelter may look like a snow cave, this molded dome should not have a sleeping bench. Dig the entire living area down to ground level (or as close to it as possible) and seal the entrance as you would the thermal shelter.

c. To construct the Quinzhee Shelter (for two personnel):

(1) Clear an area down to the ground (or close to it). The area should be at least 2 feet wider and 2 feet longer than a pair of sleeping mats placed side by side. Place a ski pole upright, in the center. Place a second pole along the ground towards one of the long ends.

(2) Begin to pile snow back into the area.

(3) After piling 2-3 feet of snow up, walk on the area to pack the snow down.

(4) Continue to pile snow, periodically stopping to pack the snow down. Pile and pack snow into a dome at least five feet in height.

(5) Let the snow set for about 3-4 hours. After this time, check to see that the snow has sufficiently hardened. If it has not you will need to wait until it does, possibly repacking the area.

(6) If the snow has hardened, begin to tunnel in from one of the long ends of the dome along the ski pole, at or just above ground level. Remove snow until you reach the center pole and then begin to widen the sleeping area until two personnel can fit. The ceiling should be arched and smooth to prevent dripping. Ceilings will melt back with age and the internal dimensions of the shelter will increase. Make the walls at least 8-10 inches thick.

Learning Step/Activity 6 – Bivouac in a quinzhee shelter.

a. A quinzhee shelter generally has more room than a thermal shelter. Equipment can be brought into the cave if there is enough room; ideally most equipment should remain packed and ready and stored outside the shelter. A poncho can be placed on the ground; the bivouac cover for the MSS is recommended. Place insulated sleeping mat followed by sleeping bag on the ground.

b. The soldier should undress in the sleeping bag and keep the clothing in the bag with him. This is especially true of boots; these must be kept in the sleeping bag with the soldier.

c. A candle or squad stove can be used to warm the shelter prior to entering the shelter; these items must be extinguished when soldiers enter the shelter for the rest cycle or for any extended length of time.

CAUTION: REMEMBER TO ADD A COUPLE OF SMALL VENTILATION HOLES IF YOU ARE GOING TO BURN CANDLES, STOVES, ETC.

CAUTION: IT'S ALWAYS BEST TO LEAVE A SMALL CRACK IN THE DOOR OPENING TO ENSURE ADEQUATE VENTILATION EVEN IF STOVES OR CANDLES ARE NOT USED.

CAUTION: EXTINGUISH ALL FLAMES PRIOR TO ENTERING THE SHELTER FOR ANY LENGTH OF TIME.

SECTION IV. SUMMARY

You now have experience constructing and utilizing improvised shelters.

Check on Learning.

1. Can heat sources be used by personnel in an improvised shelter?

Answer - NO, because of the danger of carbon monoxide poisoning. A candle may be used to warm shelter prior to the rest cycle, but must be extinguished as personnel enter.

2. Why do we dig to the ground for the thermal shelter?

Answer - To gain the benefits of thermal radiation from the ground.

3. In areas with a low snow pack and few trees, what is the best choice of thermal shelter?

Answer -The Quinzhee Shelter.

SECTION II. INTRODUCTION

Motivator: A patrol base and most forward operating bases, are tactical in nature, and are designed to provide living accommodations within a defended position. A patrol base should seldom be occupied for more than one night, unless it is being established in conjunction with a deliberate defense. The forward operating base will be occupied for longer periods of time and may involve considerable preparation. The patrol base is normally established at or after last light, should require the minimal amount of preparation possible, and must be organized to allow for rapid and coordinated responses to enemy action. This lesson provides you with techniques and procedures that you can use to plan for, establish and utilize a patrol base in cold regions.

Terminal Learning Objective

ACTION	Conduct operation of a patrol base in cold regions
CONDITION	In a snow covered environment with temperatures of 10 degrees F or colder, given the ECWCS, other issued cold weather clothing items, issued cold weather sleep system with insulating pad, other personal equipment prescribed by unit, standard ahkio group or tent and stove normally used by the unit in the field
STANDARD	Establish and operate from a patrol base(s) for four nights (one night for CWOC and ALIT). Do not sustain any cold weather injuries. Meet all critical performance measures IAW the student evaluation plan.

Safety Requirements: Instructors are required to remain with the squad during all bivouacs to ensure that students are adhering to control measures aimed at preventing cold weather related or other environmental injuries. A minimum of two medics will be on site to conduct checks of personnel for cold weather and other illness/injuries. At a minimum, each student will be evaluated by medics the morning following any bivouac. More checks may be conducted as dictated by NCOIC/OIC or 1SG/Commandant dependent upon weather conditions. Squad instructors will also conduct periodic physical checks of students throughout the training cycle. The frequency of these checks is dependent upon the weather conditions.

Risk Assessment: Medium (Reference USARAK Pamphlet 385-4)

Environmental Considerations: POL products are utilized during this instruction. Ensure adequate measures are taken to prevent spills and that adequate materials are on hand to clean up any spills that do occur.

Evaluation: You will be tested on your ability to select, establish and operate from a patrol base/assembly area for four nights (one night for CWOC) at temperatures of 10 degrees Fahrenheit or colder during the course in session. You will also be tested on your knowledge of patrol base considerations during a one hour written examination at the conclusion of the course (Refer to training schedule for date/time of exam). You must score a 70% on the written exam. If you fail the written exam, you will be given a second exam after re-training has been conducted. If you fail this second examination, you will be dismissed from the course.

Instructional Lead-In: Force protection while operating in the cold weather environment often involves considering the terrain and weather as well as the enemy. There are objective hazards that can create non-battle related injuries to soldiers and/or significant damage to equipment if these hazards are not considered. This chapter discusses various factors that leaders should take into consideration when establishing, occupying, and striking patrol bases or assembly areas, as well as information concerning construction of improvised shelters. This chapter references Chapter 5, The Principles of Patrolling in the Ranger Handbook. The information is meant to provide tactics, techniques and procedures specific to the cold weather environment and is not meant to take the place of unit SOP or dictate methods for patrolling.

The four essential requirements for survival in a cold weather environment are warmth, food, water, and shelter. Shelter is of particular importance because, without it, it is extremely difficult to provide yourself and your soldiers with the remaining three requirements, especially during inclement weather. Tents can be erected quickly with proper training and adequate practice. Soldiers must understand the importance of rehearsing this task as they would any battle drill. Soldiers that have just completed a difficult movement, or mission must be able to quickly set up shelter, get that shelter warmed and begin the process of making water and getting a warm meal. Units that are not competent at this task will suffer and quickly become casualties of the cold. There is also the tactical necessity of establishing, securing and defending a patrol base or assembly area; a unit that has not rehearsed this for cold weather operations will spend most of their time just trying to survive and the unit will become incapable of continuing with other missions.

It is also important to note that shelter can become a hindrance to training, as it provides a way to be comfortable. Soldiers may be unwilling to leave the comfort of a warm shelter and training will suffer as a result. Shelters should provide a respite from the elements, but care should be taken to ensure that field exercises do not become winter camping trips. This faulty method of ‘training’ will translate into soldiers that easily become casualties of the cold should they be called upon to conduct actual military operations in a cold weather environment.

SECTION III. PRESENTATION

Learning Step/Activity 1- Define the principles of patrolling.

a. All patrols are governed by five principles.

(1) Planning. Quickly make a simple plan and effectively communicate it to the lowest level. A great plan that takes forever to complete and is poorly disseminated isn't a great plan. Plan and prepare to a realistic standard, and rehearse everything.

(2) Reconnaissance. Your responsibility as a leader is to confirm what you think you know, and to find out what you don't.

(3) Security. Preserve your force as a whole, and your recon assets in particular. Every soldier and every rifle counts; anyone could be the difference between victory and defeat.

(4) Control. Clear concept of the operation and commander's intent, coupled with disciplined communications, to bring every man and weapon you have available to overwhelm your enemy at the decisive point.

(5) Common Sense. Do what you're supposed to do to standard without assistance, despite your own personal discomfort or fear.

Learning Step/Activity 2 – Select and establish a standard patrol base.

a. Patrol Base.

(1) A patrol base is a security perimeter that is set up when a squad or platoon conducting a patrol halts for an extended period. Patrol bases should not be occupied for more than a 24 hour period (except in emergency). A patrol never uses the same patrol base twice. Patrol bases are typically used:

- To avoid detection by eliminating movement.
- To hide a unit during a long detailed reconnaissance.
- To perform maintenance on weapons, equipment, eat and rest.
- To plan and issue orders.
- To reorganize after infiltrating on an enemy area.
- To establish a base from which to execute several consecutive or concurrent operations.

b. Fundamentals. Keep the following fundamentals in mind during patrol base operations.

(1) Site selection. The leader selects the tentative site from a map or by aerial reconnaissance. The site's suitability must be confirmed and secured before the unit moves into it. Plans to establish a patrol base must include selecting an alternate patrol base site. The alternate site is used if the first site is unsuitable or if the patrol must unexpectedly evacuate the first patrol base.

(2) Planning Considerations. Leaders planning for a patrol base must consider the mission and passive and active security measures. A patrol base must be located so it allows the unit to accomplish its mission.

(3) Security Measures. Security measures involve the following selection criteria and planning considerations:

- Selection Criteria.
- Select Terrain the enemy would probably consider of little tactical value.
- Select Terrain that is off main lines of drift.
- Select difficult terrain that would impede foot movement such as an area of dense vegetation, preferably bushes and trees that spread close to the ground.
- Select Terrain near a source of water.

- Select Terrain that can be defended for a short period of time and that offers good cover and concealment.
- Avoid known or suspected enemy positions.
- Avoid Built-up areas.
- Avoid Ridges and hilltops, except as needed for maintaining communications.
- Avoid Small valleys.
- Avoid Roads and trails.

c. The leader plans for:

(1) Observation posts and communication with observation posts.

(2) Patrol or platoon fire plan.

(3) Alert Plan.

(4) Withdrawal plan from the patrol base to include withdrawal routes and a rally point, rendezvous point, or alternate patrol base.

(5) A security system to make sure that specific soldiers are awake at all times.

(6) Enforcement of camouflage, noise, and light discipline.

(7) The conduct of required activities with minimum movement and noise.

(8) Priorities of Work.

d. Occupation (Figure 1).

(1) A PB is reconned and occupied in the same manner as an ORP, with the exception that the platoon will typically plan to enter at a 90 degree turn (this is METT-TC dependent; if there is nothing to be gained by this step, the patrol does not do it). The PL leaves a two-man OP at the turn, and the patrol covers any tracks from the turn to the PB.

(2) The platoon moves into the PB. Squad-sized patrols will generally occupy a cigar-shaped perimeter; platoon-sized patrols will generally occupy a triangle-shaped perimeter.

(3) The PL and another designated leader start at 6 o’clock and move in a clockwise manner, inspecting and adjusting the perimeter as necessary.

(4) After the PL has checked each squad sector, each SL sends a two-man R&S team to the PL at the CP. The PL issues the three R&S teams a contingency plan, recon instructions, and detailed guidance on what to look for (enemy, water, built-up areas or human habitat, roads, trails, or possible rally points).

(5) Each R&S team departs at the left flank of its squad, moves a prescribed distance and direction, and reenters at the right flank of its own squad.

(6) Squad-sized patrols do not normally send out an R&S team at night.

(7) R&S teams will prepare a sketch of the area to the squad front if possible.

(8) The patrol remains at 100 % alert during this recon.

(9) If the PL feels the patrol was tracked or followed, he may elect to wait in silence at 100 % alert before sending out R&S teams.

(10) The R&S teams may use methods such as the "I", the "Box", or the T". Regardless of the method chosen the R&S team must be able to provide the PL with the same information.

(11) Upon completion of R&S, the PL confirms or denies the patrol base location, and either moves the patrol or begins priorities of work.

e. Priorities of Work (Platoon and Squad) Once the PL is briefed by the R&S teams and determines area is suitable for a patrol base, the leader establishes or modifies defensive work priorities in order to establish the defense for the patrol base. Priorities of work is not a laundry list of tasks to be completed; to be effective, priorities of work must consist of a task, a given time, and a measurable performance standard. For each priority of work, a clear standard must be issued to guide element in the successful accomplishment of each task. It must also be designated whether the work will be controlled in a centralized or decentralized manner. Priorities of work are determined IAW METT-TC. Priorities of Work may include, but are not limited to the following tasks:

(1) Security (continuous).

(2) Prepare to utilize all passive and active measures to cover 100% of the perimeter 100% of the time, regardless of the percentage of weapons used to cover that 100% of the terrain.

(3) Readjust after R&S teams return, or based on current priority of work (such as weapons maintenance).

(4) Employ all elements, weapons, elements and personnel to meet conditions of the terrain, enemy or situation.

(5) Assign sectors of fire to all personnel and weapons. Develop squad sector sketches and platoon fire plan.

(6) Confirm location of fighting positions for cover, concealment, and observation and fields of fire. SLs supervise placement of aiming stakes and claymores.

(7) Only use one point of entry and exit, and count personnel in and out. Everyone is challenged IAW the unit SOP.

(8) Hasty fighting positions are prepared at least 18 inches deep (at the front), and sloping gently from front to rear, with a grenade sump if possible.

(9) Withdrawal Plan. The PL designates the signal for withdrawal, order of withdrawal, and the platoon rendezvous point and/or alternate patrol base.

(10) Communication (continuous). Commo must be maintained with higher headquarters, OP's, and within the unit. May be rotated between the patrol's RTOs to allow accomplishment of continuous radio monitoring, radio maintenance, act as runners for PL, or conduct other priorities of work.

(11) Mission preparation and planning. The PL uses the patrol base to plan, issue orders, rehearse, inspect, and prepare for future missions.

(12) Weapons and equipment maintenance. The PL ensures that machine guns, weapon systems, commo equipment, and night vision devices (as well as other equipment) is maintained. These items are not broken down at the same time for maintenance, and weapons are not disassembled at night. If one machine gun is down, then security for all remaining systems is raised.

(13) Water Re-Supply. The PSG organizes watering parties as necessary. The watering party carries canteens in an empty rucksack or duffel bag, and must have commo and a contingency plan prior to departure.

(14) Mess plan. At a minimum, security and weapons maintenance are performed prior to mess. No more than half of the platoon typically eats at one time, and men will typically eat 1-3 M behind their fighting positions.

(15) Rest/sleep plan management. The patrol conducts rest as necessary to prepare for future operations.

(16) Alert Plan and Stand-to. The PL states the alert posture and the stand-to time. He sets up the plan to ensure all positions are checked periodically, OP's are relieved periodically and that at least one leader is always alert. The patrol typically conducts stand-to at a time specified by unit SOP (i.e., 30 minutes prior to and after BMNT or EENT).

(17) Re-supply. Distribute or cross-load ammunition, meals, equipment, etc.

(18) Sanitation and Personal Hygiene. The PSG and medic ensure a slit trench is prepared and marked, and that squads designate urine areas. All soldiers will shave; brush teeth, wash face, hands, armpits, groin, and feet, and darken boots daily. The patrol will not leave trash behind.

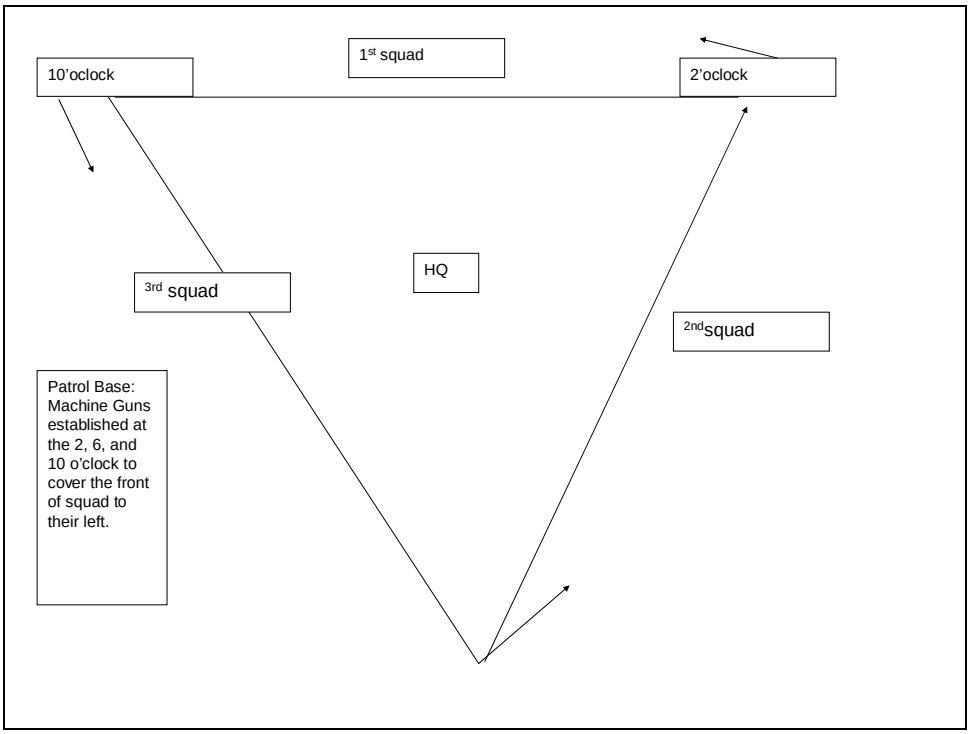

Figure 1: Standard Patrol Base

Learning Step/Activity 3 – Select areas for patrol bases and assembly areas in cold regions.

a. Site Selection. In the cold weather environment, some types of terrain offer better patrol base options than others; if the mission and tactical situation permit you to do so, try to choose a patrol base while keeping the following factors in mind.

(1) Forested Areas. Forests, especially those where the vegetation is spruce or pine, provide excellent patrol bases. Material for camouflage, firewood, and construction of both shelters and fighting positions is abundant. Spruce and pine forests are preferable for a variety of reasons, one being that these types of trees generally grow on well-drained soil. Another reason is that, because they retain their leaves or needles year-round, they offer better concealment as well as protection from wind and inclement weather than do deciduous trees, which lose their leaves during the winter months.

(2) Marshy Ground.

- Firmly frozen swampy areas, especially those that are covered with trees and brush, may also offer a good location to establish a patrol base. Streams and rivers which are located nearby, and which are covered with ice thick enough, may offer excellent routes for re-supply, as well as both mounted and dismounted movement. However, it is generally difficult to construct dug-in fighting positions; you may be forced to construct above-ground positions in these areas, using available materials. In addition, leaders should remember that a sudden thaw may leave them and their soldiers wallowing in a pool of mud.

- Areas lying in the bottom of deep valleys should be avoided, due to the tendency of masses of cold air settling in low ground (also known as a temperature inversion). During windless conditions, temperature inversions may result in a low-lying patrol base becoming enveloped in a cloud of ice fog, which could reveal the location of the site to enemy observers, especially if they are located on a higher vantage point than the patrol base.

(3) Open Country. Open country presents difficulties such as poor cover and concealment, exposure to high winds and drifting snow. If you must establish a patrol in open areas, tents should be pitched (or shelters constructed) in the lee of natural windbreaks such as depressions or the downwind side of ridges and hills. Where no natural windbreaks exist, tents should be dug into the snow as deeply as possible and/or loose snow or blocks of snow used to construct windbreaks.

(4) Mountainous Terrain. Above the tree line, mountainous terrain will provide little shelter from either observation or the elements. During high winds, lee slopes may offer shelter, however, for the same reason that they offer shelter to you, they can increase your exposure to avalanche hazards; wind-driven snow is deposited on lee slopes, and if the slope is steep enough, that snow will eventually slide. In snow-covered mountains, or when snowfall is imminent, you must examine a slope's potential for avalanche prior to establishing a bivouac upon it. Refer to 699-8018 in this publication for more information concerning avalanche hazard identification.

(5) Other Terrain/Weather Considerations

- Select terrain that is of little tactical value to the enemy.
- Select terrain that is off main lines of drift such as main ridges, creeks, valleys, couloirs – all likely avenues of approach.
- Provided your unit has the proper equipment, water re-supply will probably not be an issue as snow can be melted for the main water source; fuel re-supply can become an issue as it is needed to melt the snow and/or provide heat.
- Consider dominant terrain features from which an attack could develop.
- Prevailing wind direction (the wind may carry sound to you or to the enemy, depending upon its direction; try to select a site which is downwind from suspected enemy positions/avenues of approach, especially when wind speeds are low).
- Consider escape routes which facilitate rapid withdrawal.
- Consider availability of camouflage/construction material.

- Check illumination/weather conditions (in good weather or bright moonlight, try to select a shadowed area such as a north-facing slope or the middle of a wooded area), with S-2.
- Check thermal detection capabilities of enemy forces (also with S-2).

b. Site Reconnaissance.

(1) Security Halt of the Unit. Before occupying a patrol base, it should be laid out by a reconnaissance or quartering party that precedes the main body. One thing that consistently gets overlooked is the posture of soldiers waiting in a security halt for the reconnaissance element to find/establish the patrol base site. Leaders that are left with the main body must ensure that soldiers remain warm while maintaining security. It may be appropriate to add layers of clothing, or have soldiers get up and move in buddy teams a few hundred meters back before returning and switching out with another buddy team. It may also be possible to send the security element forward prior to departure of the main body. In extreme cases it may be wise to move the entire element into the patrol base by force, though this should never be the norm. Leaders that are on the reconnaissance must move quickly and return as soon as possible to get the main body moving again. It is up to the unit to decide the method to use for conducting the reconnaissance. For squad size elements it may be best to occupy by force. For platoon sized elements, normally the Platoon leader, compass man, and one member of each squad should move forward to conduct a reconnaissance of the patrol base. Squad members can be positioned at the 10, 2 and 6 o'clock positions (see Figure 2) and act as guides for the main body. Regardless of the method used or the size of the unit, the reconnaissance party must leave a detailed contingency plan for the main body.

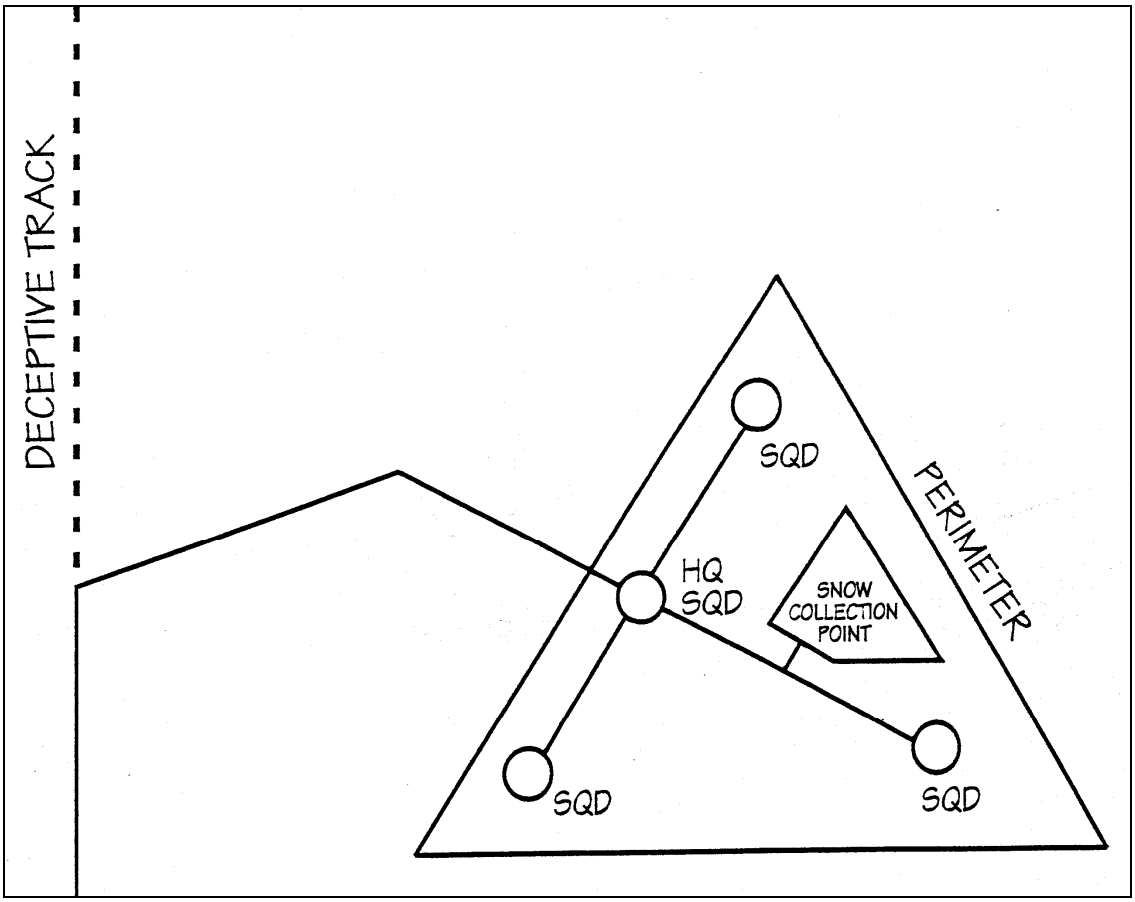

Figure 2: Platoon Patrol Base Track Plan

(2) Tasks that must be accomplished prior to the arrival of the main body include:

- Site the Patrol Base:

- All of the factors that were mentioned earlier in this lesson should be taken into consideration when choosing the exact location of a patrol base or assembly area. In addition, the establishment of a dummy patrol base should be considered.

- Dummy patrol bases, when used, should be positioned between the actual patrol base and the area that you determine to be the most likely enemy avenue of approach. Ideally, the dummy bivouac position should be far enough away that your soldiers have adequate time to get into the appropriate defensive posture once the enemy is detected, and be outside of small-arms range of the actual patrol base. When establishing a dummy site, make maximum use of mechanical ambushes and early warning devices, and, if possible, have it plotted as a target by your fire support assets.

- Establish Security at the Patrol Base. Initially, security may be established, and maintained until arrival of the main body, by the use of LP/OP's along likely avenues of approach as well as by emplacement of early warning devices. The reconnaissance party is responsible for the security of the patrol base until relieved by personnel from the main body.

- Establish a Track Plan.

  - Track plans (see figures 2, and 3) should be established before anyone enters the site. Normally, the incoming track will be extended well beyond the point where it enters the bivouac, and may lead to a dummy patrol base (see above). Branching off from the incoming track, preferably at an acute angle to the direction of the enemy, is the patrol base track, or "main street". This is the single track that enters the actual patrol base perimeter. Minor tracks are established leading off of main street to sub-unit areas where tents are located. Both inner and outer perimeter tracks are also established.

  - Defensive positions are established along the outer edge of the inner perimeter track. The outer perimeter track should parallel the inner perimeter track outside of hand grenade range of the positions along the inner track. LP/OP's may be established along the outer edge of the outer track, and extensive use of early warning devices/mechanical ambushes should be made there as well.

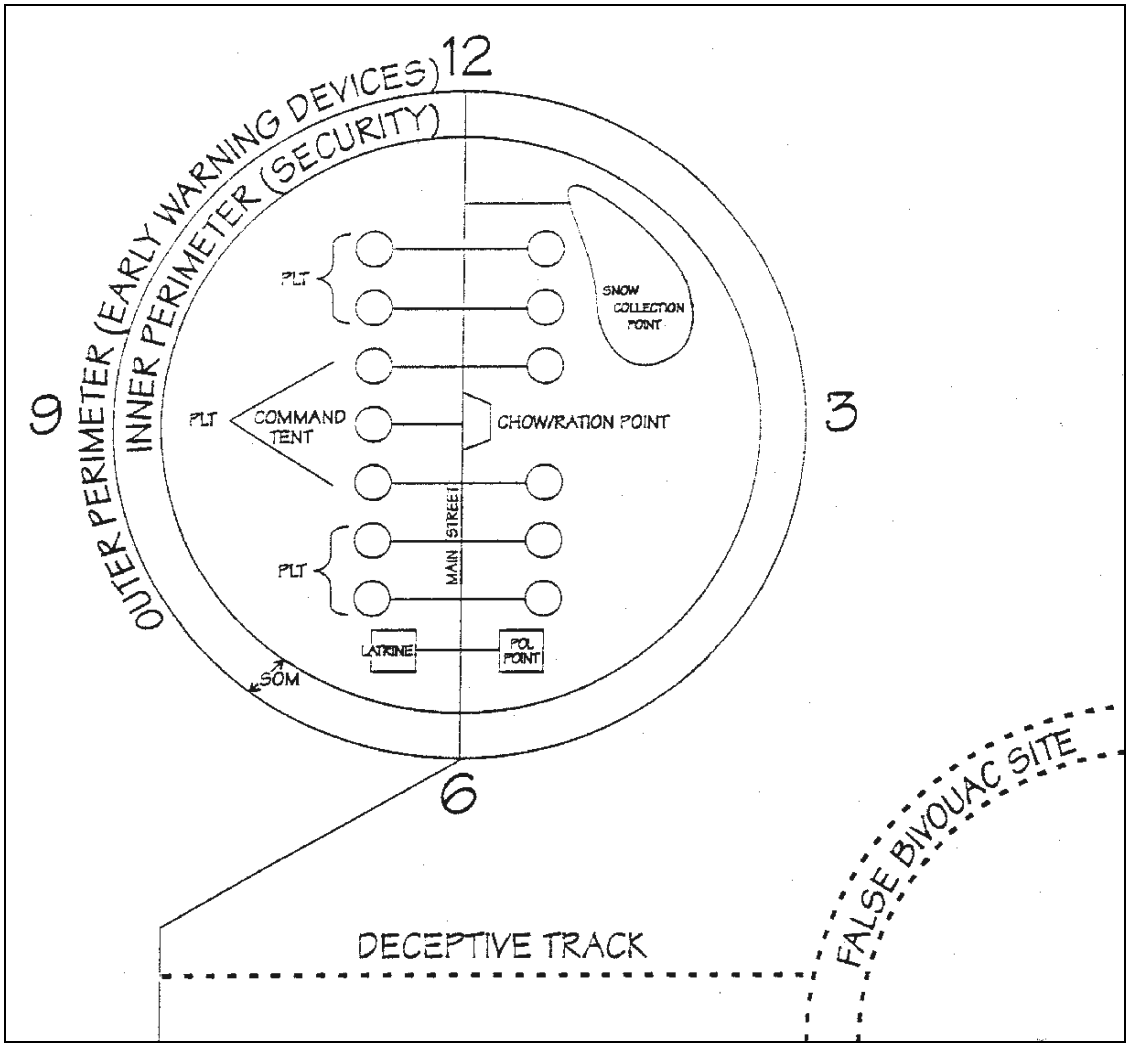

Figure 3: Company Assembly Area Track Plan

- Select Defensive Sectors.
    - The reconnaissance party should designate the defensive sectors of responsibility for each sub-unit of the main body. The boundary between each sub-unit sector should be marked. At a minimum the above should be accomplished by the reconnaissance party.
    - The tasks listed below can also be accomplished by the reconnaissance party, but remember to consider the time that the main body has been stationary.
- Mark Tent Sites. The location of each tent to be set up should be marked and a single trail established to that point. Sub-unit integrity should be maintained to the greatest extent possible, and sub-unit tent sites should be designated with regard to ease of access to that elements defensive sector.
- Select areas for cutting brushwood/gathering snow. If brush or wood will be required for construction of shelters or fighting positions, an area should be designated for personnel to obtain this material. This area should be within the inner perimeter track, and cutting should be done in a manner that minimizes the chances of detection by enemy observation from either the ground or air. Areas for gathering snow (for water production) should be designated within the inner perimeter as well, but away from latrines, wood cutting areas, and POL storage points. Care must be taken to minimize the possibility that snow gathered from this area could be contaminated, which would render the snow unfit for producing potable water.

- Provide Guides for the Main Body

- Once the main body arrives, it is imperative that they be able to rapidly occupy the patrol base or assembly area without at the same time compromising the track plan, or noise/light discipline. Speed is essential because soldiers who have just completed a long oversnow movement are likely to be perspiring as well as tired. If they are left standing in the cold while their chain of command is trying to determine where they belong, the unit is at risk to suffer cold weather injuries.

c. Occupation. After link-up between the guides and the main body, the guides (at least one for the commander and for each sub-unit) should explain the site layout and track plan before actually leading their assigned element into the PB or AA.

(1) Immediately upon arrival, the leader should confirm decisions made by the reconnaissance/quartering party and issue orders as follows:

- Confirm/modify the track plan
- Designate temporary location(s) for weapons/equipment under his direct control to prevent loss in the snow
- Decide the type of fighting positions (built up vs. dug in) to be used, and site them
- Confirm/modify tent locations
- Confirm/modify brush cutting/snow gathering areas and latrine sites
- Designate method of, and, if necessary, location for, garbage disposal
- Decide type of improvised shelters to be constructed (if tents are not used). If there is a high probability of the enemy employing thermal detection devices/sights, improvised shelters such as thermal shelters or molded dome shelters (quingy huts) emit a much smaller thermal signature than heated tents or personnel sleeping in unheated tents (see figure 4)

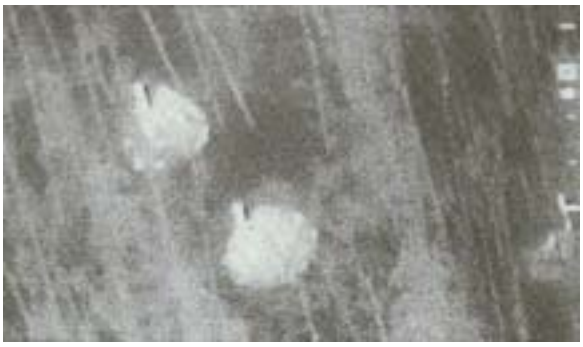

Figure 4: Thermal Image of Two 10 Man Arctic Tents

- Give orders for preparation/consumption of hot drinks and a hot meal. *When* this order is given is determined by the amount of progress made in preparation of defenses, as well as the need for shelter (based upon weather conditions).

(2) As the main body moves into the patrol base, care must be taken to ensure that track discipline (strict observance of the track plan) is enforced. In addition, noise and light discipline must be rigidly enforced. Although it is virtually impossible to occupy a site in total silence (especially when you have to pound tent pins or cut wood for positions and shelters) your soldiers should be trained well enough so that they do not need lanterns or flashlights to enable them to accomplish their tasks.

(3) Once the main body has arrived, the security elements provided by the reconnaissance party should be relieved as quickly as possible. As temperatures decrease, the need for speed in conducting this relief becomes increasingly important. However, soldiers designated to relieve reconnaissance party security forces must be allowed to change out of clothing that may have become perspiration-soaked

during the movement to the bivouac, and to adjust their clothing to ensure adequate protection while performing relatively sedentary duties in LP/OP's.

d. Security. In very cold conditions, sentries can only remain alert for relatively short periods of time. They cannot remain motionless or look into the wind for long, and their hearing is impaired by the additional headwear required in cold temperatures. Leaders must use their judgment on how long their soldiers can remain outside and be able to perform their duties at peak efficiency, and without increased risk of cold weather injury. The time a soldier can spend outside of a heated shelter performing relatively sedentary tasks will vary with the temperature, degree of wind chill, visibility, and the cold weather training and experience level of the soldier. The following are some techniques that may be used for maintaining security in cold weather; if you decide to use one, ensure that you select the technique which best suits the tactical situation:

(1) Combined living and fighting positions may be established on likely enemy avenues of approach. Tents or improvised shelters may be used. Ensure that warning systems are established and/or that these positions are far enough from the main patrol base to give adequate warning of an attack to the occupants of the main site.

(2) One complete sub-unit may be used to perform security duties at any given time; this will allow the remainder of the unit an extended period of time to rest in heated shelters.

(3) Double the number of personnel on guard, to allow one soldier to act as a fire guard inside the shelter/tent while another performs sentry duty. After waking up his relief the fire guard leaves the tent to relieve the sentry, who then returns to the tent to rest and warm himself.

(4) When establishing LP/OP's or emplacing mechanical ambushes/early warning devices, always approach the location you have selected from a flank; do not leave a trail in the snow that points the enemy directly toward or leads them straight into the patrol base.

(5) Keep lanterns inside tents turned as low as possible; this will minimize loss of night vision for personnel inside the tent, as well as reduce the patrol base signature created by light showing through tent openings.

(6) Balance the need to provide heated shelter against the necessity to reduce the thermal signature of the patrol base. Natural terrain features and snow constructions may be used to mask thermal signatures.

e. Duties of Tent Group Leaders. The tent group leader, usually the squad leader or senior occupant of the tent, is responsible for ensuring that the tent group is properly set up, maintained, struck, and packed, as well as for everything that occurs inside his tent. While bivouacking, the leader must ensure that:

(1) Sleeping space is properly allocated.
(2) Weapons and equipment are stored outside the tent in accordance with standard operating procedures.
(3) Track, camouflage, noise, and light discipline is strictly enforced.
(4) Guard/sentry rotations are established and disseminated, and guards/sentries know who their relief is and where that soldier sleeps.
(5) Blackout is maintained when personnel enter/exit the tent.
(6) The tent is de-iced/brushed off, and drifted snow removed regularly.
(7) Fire precautions are observed.
(8) Squad stoves and lanterns are re-fuelled outside.
(9) Weapons, equipment, stoves, and lanterns are regularly maintained.
(10) Personnel brush snow off clothing and equipment before entering the tent.
(11) Soldiers dry clothes at every opportunity.
(12) Water is made continuously and proper hydration is enforced.
(13) Each soldier receives adequate rations and all rations are consumed.
(14) Cooking utensils are clean.
(15) The highest standards of personnel hygiene and sanitation are maintained.

(16) Ensure lanterns are hung by a chain a minimum of 18 inches below the apex of the tent. If the lantern is closer to the tent it is a fire hazard.

f. Organization within a tent.

(1) Tents are just large enough to provide adequate sleeping space for the occupants together with a small area for cooking, washing, and performing duty as fire guard. Orderly and disciplined arrangements are a necessity in such cramped circumstances. The following procedures are established to enhance the comfort, safety, and operational effectiveness of personnel required to live in tents. Many of these procedures are readily adaptable to life in improvised shelters as well.

(2) The minimum required individual clothing, equipment, and rations are allowed inside the tent. Generally, your canteens, daily rations, insulated sleeping mat, sleeping bag, a small, sharp, knife and the clothing you will require if you leave the tent will be the only items you require. Of course, damp clothing and equipment may be brought inside where it can be hung up to dry, but once dry these items should be placed in your rucksack outside the tent. Prior to every stand-to, all items should be packed into the rucksack so that you will have the essential equipment to survive with you (except the tent group) if your unit is forced to execute a rapid withdrawal under pressure.

(3) All personnel living in a heated tent should have a knife immediately available at all times, and especially while sleeping. If, despite precautions, a tent fire occurs it may take as little as ten seconds for fire to completely engulf a tent, and less than a minute to destroy it. If personnel are asleep, with the zipper of their sleeping bag closed, they may not have enough time to unzip the bag. If they cannot do this, because of lack of time or a jammed zipper, they must attempt to roll out from under the wall of the tent while still in their sleeping bag. This may prove difficult, especially for someone just shocked into wakefulness, and still disoriented. A small, sharp, knife immediately at hand will give an individual the ability to cut his or her way out of the sleeping bag and through the wall of the tent. This single item of equipment may end up being the difference between life and death.

(4) As stated earlier, the tent group leader is responsible for allocating personal space within the tent. When doing so, the leader should take into consideration the duty roster, as well as the need for an orderly exit in the event of an emergency.

(5) Spare batteries for equipment such as NVG's or radios should be kept in the tent, although away from sources of direct heat such as stoves and lanterns, due to their diminished power output when allowed to become cold or frozen. Small battery-powered items such as flashlights or electric razors may be kept in the tent as well, and are ideally stored in the owners sleeping bag.

(6) Weapons racks should be constructed outside the tent as close as possible to the main entrance. A poncho should be used to keep sights, barrels, and moving parts on weapons from becoming clogged with snow. Personnel should always remember exactly where on the rack their individual weapon is located, so that, if a situation arises which results in a mad rush to arms, they will be able to grab the correct weapon. The weapons rack is constructed in a manner identical to the cross-tree latrine, but without the wind break a latrine requires.

(7) Rucksacks should be lined up on the ground outside the main door of the tent where they will not interfere with personnel entering or exiting the tent. A specific order in which individuals in the tent must line up their rucksack in relation to the others should be established to make it easy for soldiers to identify their gear during conditions of limited visibility. Other personal equipment such as LBV/LCE's and kevlar helmets/body armor may be draped over or placed into the rucksack.

(8) In a cold-dry environment, it is not necessary to cover rucksacks and other gear (except weapons, ammunition, NVG's, and communications equipment) with a poncho; the temperature is too cold to allow the equipment to become wet. Simply brush off any snow before using the item. In a cold-wet environment, all weapons, ammunition, and personal equipment stored outside should be covered with a poncho or other type of waterproof cover.

(9) A plastic trash bag filled with snow taken from the snow collection area should be kept inside the tent. One of the duties of the fireguard is to melt snow for drinking water, as well as to have hot drinks

ready for personnel coming in from sentry duty. The five gallon water can, which the fireguard can use as a seat, should be kept inside the tent and topped off whenever it is less than full.

(10) The amount of clothing worn by personnel while resting inside the tent will be dictated by the tactical situation, as well as whether or not the shelter is heated. For example, if there is an increased chance of enemy contact, you may decide that your soldiers should rest on top of their sleeping mat, fully dressed, with their outer garments unzipped. When a scenario such as this occurs, tent group leaders will need to ensure that the temperature of the stove is regulated so that it is warm enough to keep the soldiers comfortable, but not so warm that they begin to perspire.

(11) When living in a close environment such as a tent or improvised shelter, the highest possible standards of sanitation and personal hygiene must be maintained. Failure to enforce or practice good sanitation and hygiene may expose you and your soldiers to sickness and disease. As discussed in chapter nine the conditions that soldiers must live in during cold weather create an exceptionally good opportunity for biological attack. In addition, a soldier is more susceptible to becoming a cold weather casualty if he does not keep both himself and his clothing clean. Remember the "***C***" in the key word ***C-O-L-D***!

(12) If necessary, personnel should shave in a heated shelter just before going to sleep. This will allow natural facial oils stripped off by shaving time to replenish themselves before the face is once again exposed to the cold. These facial oils provide natural protection against cold weather injury.

(13) Soldiers should brush teeth daily. If a tooth-brush is unavailable, one may be improvised with the chewed end of a twig. If a twig is not available, salt on a fingertip may be used to gently scrub the teeth.

(14) Underwear should be changed as often as is practical, but at least twice weekly.

(15) Finally, socks should be changed as often as is necessary to keep the feet dry.

g. Heating at night.

(1) The tactical situation, weather, and your soldiers' level of hydration must all be taken into account when determining whether or not to operate heaters throughout the night. The major disadvantages of heating your shelters all night long, other than increased fuel requirements, are the obvious thermal signature of a heated shelter in the middle of a cold environment and the necessity of an additional soldier losing sleep to perform duty as a fire guard.

(2) Some advantages of keeping the stove burning are that soldiers will lose less body heat and conserve more energy while sleeping (with improved performance the following day). Also, troops can be more ready to react to a threat by sleeping fully clothed on top of their sleeping bag (or just their insulating pad).

(3) Soldiers sleeping in heated shelters will have the opportunity to dry wet clothing by allowing it to hang in the tent while they sleep; they should not try to dry wet clothes in their sleeping bags while they rest.

(4) Fire guards can use their guard shift to melt snow to provide potable water and hot drinks for sentries, as well as perform weapons maintenance, monitor communications, or conduct personal hygiene.

h. Latrines. Normally, a central latrine should be established if dispersion within the patrol base is not too great. One latrine will normally serve the needs of up to a platoon-sized unit. The following should be taken into consideration when establishing latrines:

(1) The preferred type of latrine for field use is a straddle trench. However due to environmental restrictions during training, or to solidly frozen soil, it may not be permissible or possible to construct a latrine of this type. Another type of latrine that is recommended for use is the cross tree type latrine, especially when used in conjunction with a ration case lined with trash bags. Once filled, the bags can be sealed, closed into the case, and burned or hauled to the rear to be properly disposed of (see figure 5).

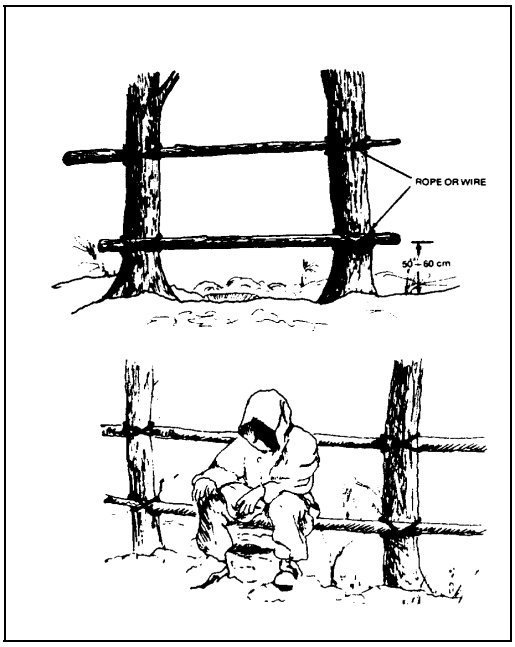

Figure 5: Cross Tree Type Latrine

(2) Latrines must be sited downwind from patrol bases, but not so far from the shelters that soldiers are encouraged to violate sanitation discipline. They should also be downwind and well away from snow gathering areas within the patrol base. They should be wind-proofed with branches, ponchos, snow blocks, or other available materials, and must be camouflaged.

(3) Soldiers should urinate in a designated spot on the ground, and fresh snow should be used to cover this spot daily. The spot should not be covered after each use, because the color of the snow at this location will give leaders valuable feedback on whether or not their soldiers are properly hydrated. If the spot is bright yellow or a darker color, it's time to start melting more snow and forcing hydration.

i. Waste Disposal. Poor waste disposal practices, in addition to being violations of both environmental regulations and proper field sanitation procedures, can provide the enemy with a great deal of information which should be denied them. Follow these guidelines for proper waste disposal:

(1) Whenever possible, dispose of all garbage in pits; burn or bury it prior to departing the patrol base. There should be a pit for each platoon-sized element, and they should be located away from and downwind of snow gathering areas.

(2) Patrols should never leave any evidence of their presence behind them; they should carry all waste with them until it can be properly disposed of to avoid providing the enemy with potential intelligence information.

(3) During training, bag all trash and garbage and haul it to the rear for proper disposal.

j. Breaking Camp

(1) When a unit departs a patrol base the commander determines what time the unit will begin movement. Using the backwards planning process, he or she will also determine "pull-pole" time as well. The time interval commanders allow their soldiers between "pull-pole" and departure must be kept as short as possible, and pulling poles should be done in the same order in which movement will be conducted. The bottom line is that you must prevent your soldiers from standing around in the cold unnecessarily.

(2) In order to do this, every leader must know how long their troops require between the time the order to break down tents is given and the time they are ready to move. This length of time will be in inverse relation to the amount (and quality) of both the individual and collective training that you conduct to prepare for cold weather operations. A well trained squad should require 15 minutes, provided they have

been given at least 30 minutes of advance warning to prepare all of their personal gear and all of the tent group equipment, except the tent itself, packed and ready to move. It is the tent group leader's responsibility to ensure that their tent is ready to strike at the designated time.

(3) Before departing a patrol base, all latrines and garbage pits should be covered with at least two feet of earth or packed snow. Finally, leaders must ensure that security precautions are not relaxed, nor track, camouflage, noise, or light discipline forgotten.

k. Striking Tents. If a tent is slowly or improperly set up, only the occupants of that tent will suffer; however, if a squad is slow in striking their tent, more efficient squads will have to stand in the cold and wait for them. Therefore, ensuring that breaking camp and striking tents becomes a battle drill for your soldiers is extremely important. Refer to 699-8025: Conduct tent and stove drill for specific instructions on striking the tent.

Learning Step/Activity 4 – Select and establish a linear perimeter.

This technique is appropriate for squad sized elements. Dig out a central trench large enough to accommodate the squad. Construct snow cave shelters by tunneling into the side of the trench. Two to four shelters should be constructed, depending upon the size of the squad and the size of the shelters. You should prepare enough shelters for everyone. During severe weather, it may be necessary to provide shelter for the entire squad. Primary and alternate firing positions can be constructed. The figure below shows the basic concept.

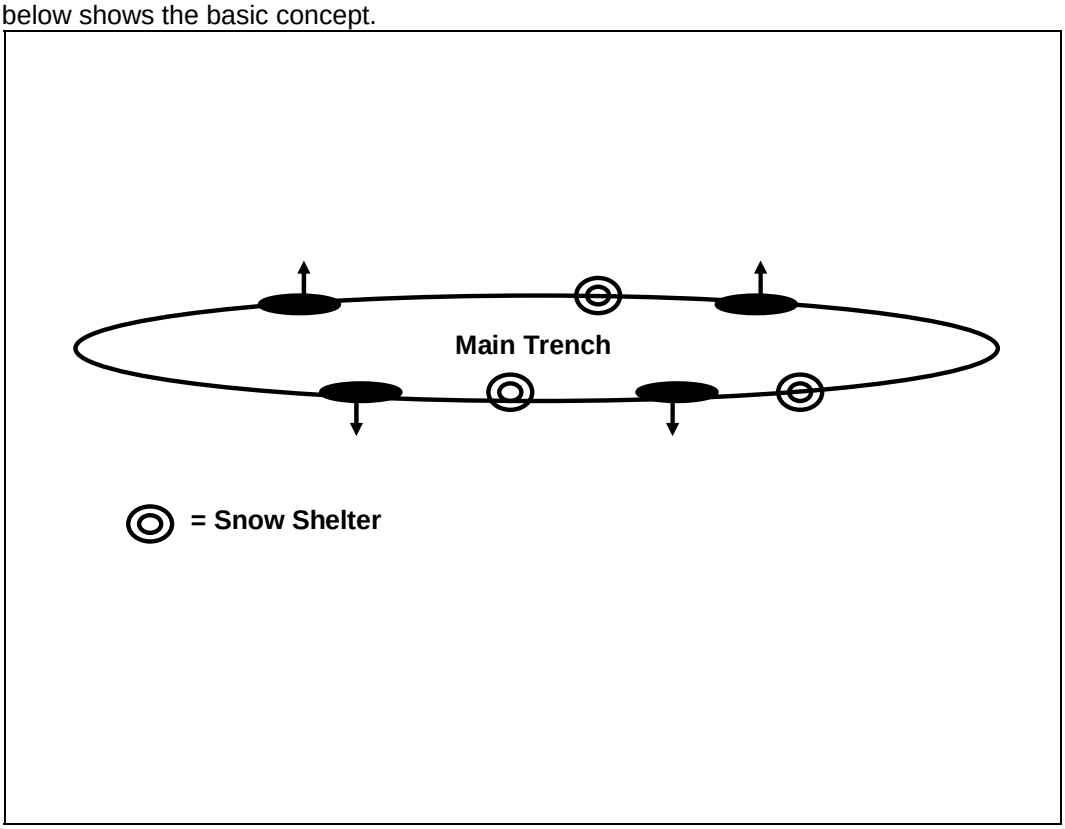

Figure 6: Linear Perimeter

Learning Step Activity 5 – Construct a Crow's Foot.

For platoon sized elements, a crow foot method can be utilized. Dig three trenches, one per squad and construct shelters by tunneling into the sides of the trench. The platoon command post will be centrally located. Figure 7 shows the basic concept.

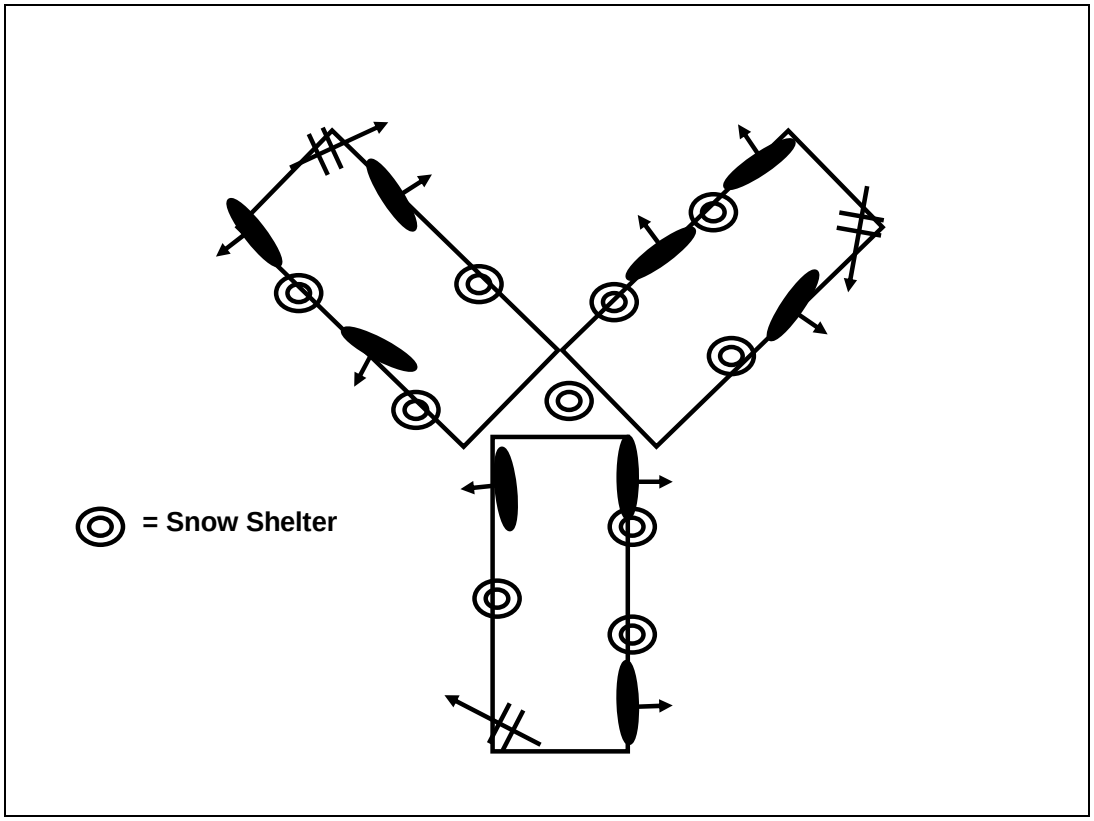

Figure 7: Crow's Foot

Learning Step/Activity 6 – Construct a Circular Perimeter.

Another method for a squad or platoon is to dig out a circular perimeter, excavating all of the snow in the circle. This method will take considerable time to prepare and will present the largest signature, but is the easiest method to defend from. Snow shelters are constructed in a manner similar to the previous methods.

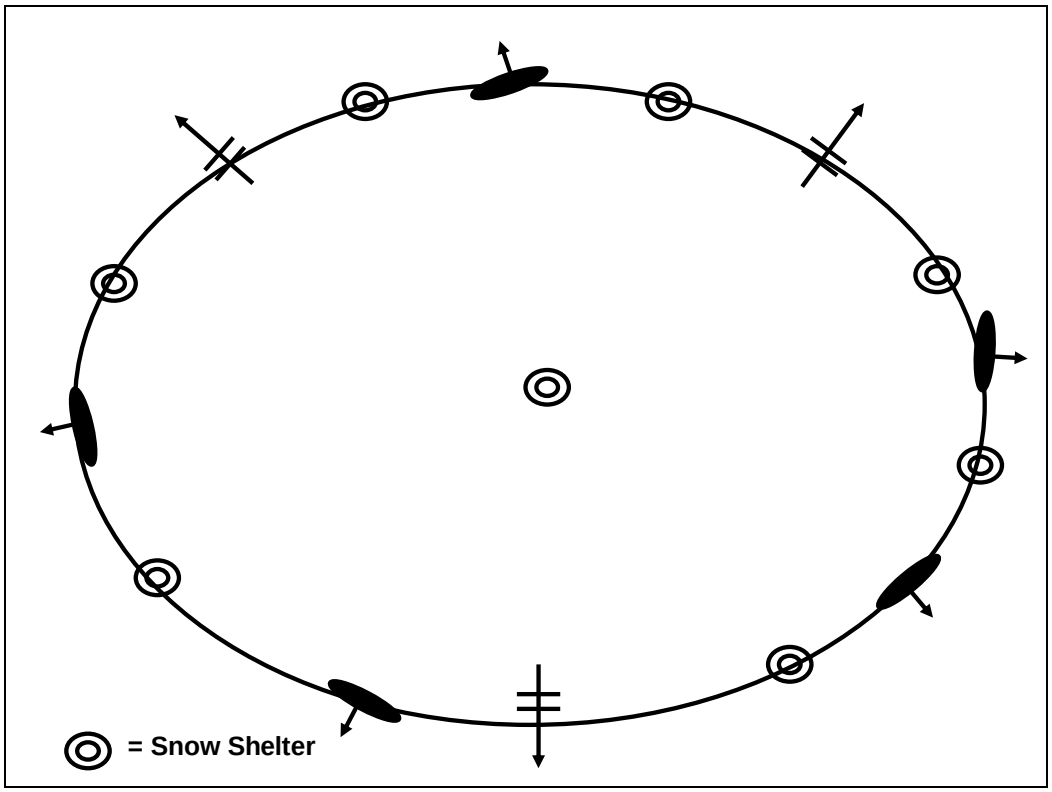

Figure 8: Circular

SECTION IV. SUMMARY

You now have a basis for conducing patrol base operations, assembly area operations and bivouacs in cold regions. It is your job to take this information back to your unit and develop standard operating procedures for your unit while conducting training and/or operations in the cold weather environment.

Check on Learning.

1. What are three open ground patrol base techniques?
Answer - Linear, Crow's Foot and Circular.

2. What is a problem that typically occurs while the recon party looks for and establishes a PB/AA?
Answer - The main body is inactive and soldiers become susceptible to cold weather injuries. The recon party must establish the site quickly and the main body must take steps to keep soldiers warm. Another option is to occupy by force in extreme cold conditions.

SECTION II. INTRODUCTION

Motivator: (Slide 1) "The cold has been identified as an enemy of military forces and equipment since the beginning of recorded history. When employed in a cold region, a force actually faces two enemies--the tactical enemy and the environment that also aggressively attacks and can destroy equipment and men. The impact of cold weather on combat forces can readily be seen during decisive campaigns in history. Napoleon's disastrous march into Russia, Germany's failed conquest of Russia during World War II, and the operations of United Nations forces in Korea are modern examples. With United States (US) reliance on global force projection, Army forces must prepare to operate in a variety of climates, including extreme cold."

- FM 9-207 Operations and Maintenance of Ordnance Material in Cold Weather. This is an excellent resource for the effects of cold on military equipment.

Terminal Learning Objective

ACTION	Operate vehicles in the cold weather environment
CONDITION	In temperatures of 32º F to -60 ºF, given the requirement to maintain and operate a military vehicle, and the correct technical manual and lubrication orders for the vehicle.
STANDARD	Identify the common problems with cold weather vehicle operation. Take steps to reduce or eliminate problems caused by the cold before, during, and after operations.

Safety Requirements: For classroom training discuss emergency procedures in case of fire or natural disaster.

Risk Assessment: Low

Environmental Considerations: None

Evaluation: You will be tested on your knowledge of vehicle maintenance in cold weather during a one hour written examination at the conclusion of the course (Refer to training schedule for date/time of exam). You must score a 70% on the written exam. If you fail the written exam, you will be given a second exam after re-training has been conducted. If you fail this second examination, you will be dismissed from the course.

Instructional Lead-In: This lesson will give you some common effects of cold on materials and vehicles as well as some tips and procedures to reduce or eliminate problems associated with operating vehicles in the cold.

SECTION III. PRESENTATION

Learning Step/Activity 1 – Describe cold conditions and the effects that cold conditions have on materials.

a. (Slide 3) Operating equipment in temperatures down to 10° F presents few problems. Conditions are similar to those experienced during winter in the northern part of the continental United States (CONUS).

b. From 10° F to -25° F, operations become more difficult. At the warmer end of this range, lack of winterization results in only a slight loss of operating efficiency. Proper training and preventive maintenance prevents many failures of materiel and injuries to you.

c. When temperatures drop below -25° F, operations become increasingly difficult. At temperatures nearing -50° F and lower, it will require maximum effort on your part to perform even the simplest tasks with completely winterized materiel. Even if heated facilities are available, the frozen parts will need to be thawed. This lag time will need to be planned for.

d. Other than extreme cold, conditions that affect equipment most often encountered in a cold weather environment include condensation, snow and frozen surfaces. Most equipment will operate normally down to about 10°F. Below this temperature the physical properties of materials change and can affect operations. Temperatures of 10°F to -65°F are encountered often in the winter season in the interior of Alaska and other regions of the world. Equipment must be winterized to function effectively in this range. Humidity and warm air combine with a piece of cold equipment to cause condensation. This can freeze the internal parts of vehicles and equipment and has greater detrimental effect in extreme low temperatures as it turns to ice. Snow creates similar moisture problems in addition to mobility issues. Cold temperatures hinder any penetration of the ground. Cold can also cause equipment to be cold soaked which may prevent operation, cause contact frostbite, fusing of components, and traction problems.

Cold Conditions

COLD- few problems down to 10°F; for temperatures 10° to -25°F special considerations for operations such as winterization of vehicles; below -25°F routine tasks become complex

CONDENSATION- occurs when cold equipment is quickly exposed to a warmer environment

SNOW- introduces moisture to equipment and causes mobility problems; increases equipment loss

FROZEN SURFACES- hinders emplacement of stakes, grounding rods; creates unstable firing platforms; possible contact frostbite

e. (Slide 4) Effect on Materials. Severe cold changes the properties of materials that we use everyday. You must take special care to reduce the shock load that is placed on items affected by severe cold. Some metals can withstand only half of the shock load at -20°F that they can in temperate climates. This is the reason that ski lifts are shut down at -20º F. Rubber remains flexible to -20°F, then will gradually stiffen. At -60°F it loses all elasticity and becomes very brittle. Special care must be taken when handling rubber covered cables. They must be protected from bending and flexing. They should be warmed before bending to prevent insulation from cracking and causing a short. Plastics tend to expand and contract much more than metal or glass. Any materials made of

plastic must be handled carefully. Glass and other ceramics can be expected to perform normally at low temperatures. However, cracking may result if heat is applied directly to a cold windshield or vehicle glass. Canvas and cotton duck fabrics retain their flexibility even at extremely low temperatures provided that they are kept dry. Some newer tent materials become brittle and difficult to fold at low temperatures. Flexible tent windows are extremely difficult to smooth out at subzero temperatures.

Effects on Materials

METALS- brittle in severe cold; at -20°F certain metals (especially steel) can't withstand a shock load

RUBBER- remains flexible until below -20°F

RUBBER COVERED CABLES- easily cracked at low temp; should be re-warmed before bending

PLASTICS- generally expand and contract more than metals

GLASS- windshields may crack if heat is applied too rapidly

FABRICS- retain flexibility if kept dry; shrinkage can occur

Learning Step/Activity 2 – Describe the effects of extreme cold on antifreeze, fuels, lubricants and batteries.

a. (Slide 5) An anti-freeze mixture of anti-freeze compound and water must be used to protect cooling systems from freezing. It is imperative that the correct mixture of antifreeze to water is used for maximum protection.

The optimal mixture for extremely low temperature protection is 68% antifreeze and 32% water (7 parts antifreeze to 3 parts water to make it easy). Above or below this mixture will result in reduced cooling/antifreeze protection.

Arctic type antifreeze offers the maximum low temperature protection to -90°F, but is not efficient at higher temperatures. It is only compatible with selected types of equipment.

Ensure vehicles have correct thermostats and winter fronts or radiator shutters installed.

Antifreeze

Ethylene-Glycol must be mixed to a proportion of water to be effective; 68% antifreeze and 32% water is optimum.

Use of a block heater is important as ice crystals will begin to form at -40°F

Arctic type antifreeze protects to -90°F

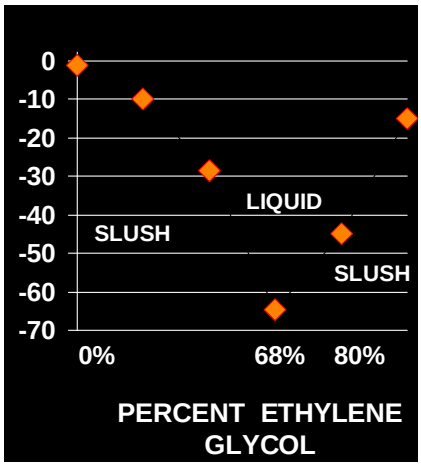

b. (Slide 6) Fuels.

(1) Mogas is not affected by low temperatures, although there are additives available which will increase the performance.

(2) Diesel fuel contains waxes that congeal at temperatures below 0°F. If this occurs, the fuel filter will clog and the fuel will not flow. Diesel fuel, Arctic, DFA, does not contain as much wax and performs well at low temperatures.

(3) Condensation and water can accumulate in fuel containers, pumps, carburetors and fuel injectors. At low temperatures, this water will form ice crystals that will clog fuel lines, filters, jets, and injector nozzles. To prevent this, add fuel system icing inhibitor to diesel fuels. Add methanol, technical, to gasoline.

(4) Some fuels come premixed and adding too much ice inhibitor can cause reduced engine performance and possible engine damage.

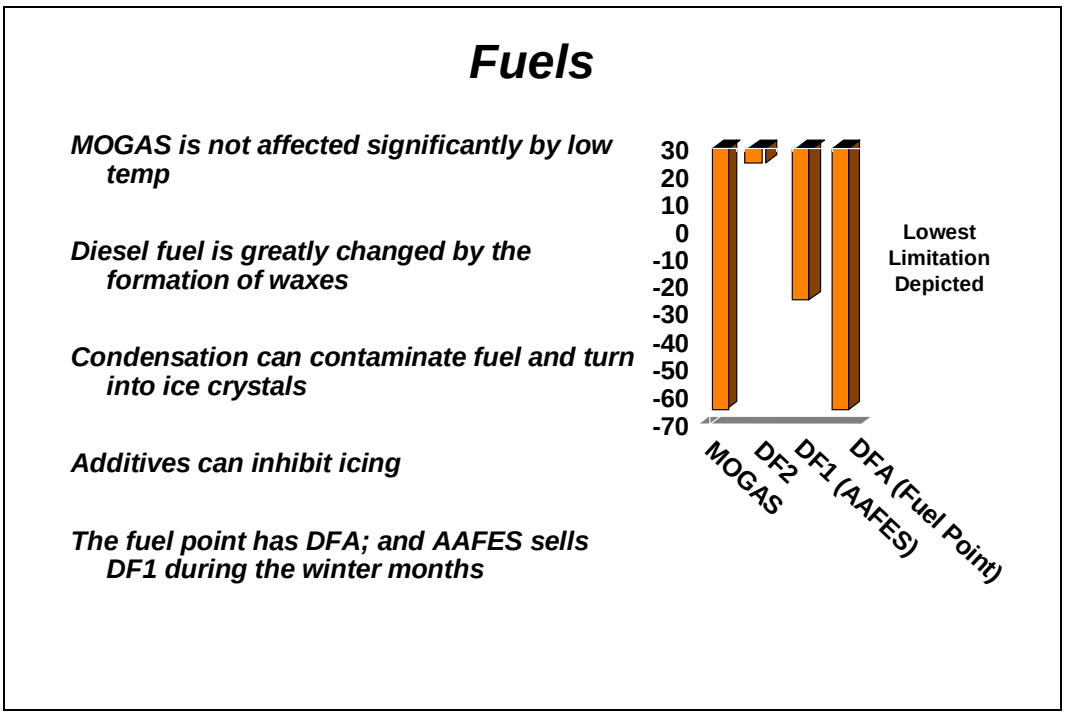

c. (Slide 7) Hydraulic Fluids. There are specific recommendations in TM's and LO's concerning the proper hydraulic fluid for cold temperatures. For example at -25º F OHT should replace FRH.

Hydraulic Fluids

Hydraulic fluids are specified in Appendix H of the Cold Weather Operations Handbook

Use OHT in place of FRH for temperatures of -25° F and below

d. (Slide 8) Lubricants. Lubricants represent the single most critical problem encountered by vehicles in cold regions. A vehicle lubricated for use in temperate regions will simply not operate in extremely cold temperatures. A chunk of heavy gear oil can be used to pound nails at -40°F.

(1) Check applicable TM's and FM 9-207 for recommended lubricants. Lubricant orders are based upon three temperature ranges:

- above 32º F
- +40º to -10º F
- from 0º to -65º F

(2) Store lubricants in warm place.

(3) OEA (oil, engine, arctic) is generally best for cold weather operations, and can be used for short periods of time in temperate conditions. This will allow you to winterize vehicles prior to load-out when deploying from a temperate to a cold region.

(4) Lubricants must have a sufficiently low viscosity for low temperatures.

(5) Use of unsuitable lubricants will result in difficult starting, shifting, and equipment failure.

(6) GAA has a very wide heat tolerance of -50°F to +225°F and can be used year round.

Lubricants

Check TM to find recommended lubricant

Store lubricants in a warm place

Oil Engine Arctic (OEA) can be used for short periods in temperate conditions

Grease Automotive Artillery (GAA)

The Lube Orders are based upon three temperature ratings – above 32 F; from 40 F to –10 F; 0 to –65 F

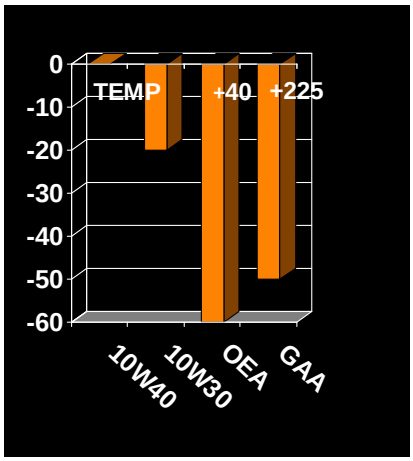

e. (Slide 9) Vehicle Batteries. Batteries are adversely affected by the cold; available power decreases as battery temperature decreases.

(1) As temperatures fall, the battery's available energy will also fall. Power requirements for starting a vehicle increase when the battery is least capable of delivering power. For example at 15º F, a fully charged battery will only deliver 50% of the current normally produced. At -40 and below the available current is just about zero.

(2) A fully charged battery will not freeze. Frozen batteries rupture and break internally and externally.

(3) Vehicle batteries do not receive an adequate charge unless the battery is warmed to about 35 F.

(4) At temperatures below -25º F, batteries should be tested every three days. If the specific gravity is less than 1.1250, the battery should be recharged.

(5) Batteries should be filled with 1.280 specific gravity electrolyte (different form the standard 1.250 electrolyte), as this will protect the battery to -90 F.

(6) Ensure that the battery has not frozen prior to jump-starting a vehicle. A frozen battery can explode due to the combination of hydrogen gas and the blockage of battery vents by ice.

(7) Gel Cell batteries are due to replace the standard vehicle batteries. They are generally maintenance free, will not freeze and have a longer life span than conventional vehicle batteries. Another advantage is that they may be submersed in water with no adverse effects.

Vehicle Batteries

Batteries are adversely affected by cold; as the temperature drops the current available decreases; at -40º F the power available is near zero

A fully charged battery will not freeze; vehicle batteries do not receive an adequate charge unless warmed to 35º F

Test batteries every three days; fill with 1.280 electrolyte for protection to -90º F

Gel Cell batteries are generally maintenance free and are replacing older style storage batteries

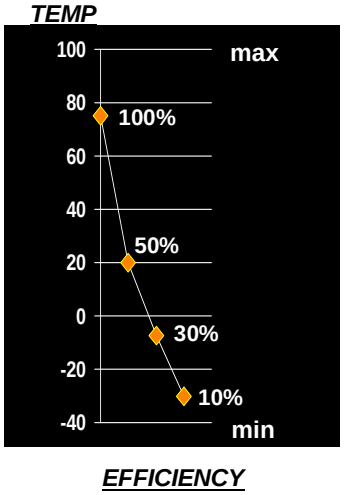

f. (Slide 10) Small equipment batteries. Small equipment batteries for flashlights, Night Vision Devices, and field telephones must use alkaline batteries. Two sets of batteries should be available for each item of equipment. One set can be carried under the soldiers insulating garments. When cold degrades the performance of equipment, batteries can be rotated. To get maximum effectiveness out of Nickel-Cadmium, or NiCad, batteries, the charging memory must be destroyed. The battery must be completely discharged before it can be recharged. Ni-Cad batteries are a very effective low temperature power source. Lithium based batteries are the preferred cold weather battery. The lithium sulfur dioxide battery is recommended for use with the SINCGARS. Mercury batteries should not be used below 0°F. The Additional Items Authorized table in a TM has items that can be used to externally heat small equipment batteries.

Small Equipment Batteries

Small equipment batteries must be alkaline type and not dry cell.

Keep small equipment batteries in interior pockets to help keep them warm.

Nickel-cadmium type is very effective at low temperatures.

Lithium sulfur dioxide batteries are recommended for cold weather.

Learning Step/Activity 3 - Describe preparation and operation of military vehicles in extreme cold weather.

a. (Slide 11&12) Movement in cold weather environments can be one of the most difficult tasks that a unit may encounter. Vehicles are the preferred method of movement, but, with cold weather comes a higher maintenance requirement and incidence of problems. Some of the most commonly encountered problems are listed below, along with some useful problem-solving tips, which may assist you in accomplishing your mission:

(1) Wheel Bearings. Wheel bearings are serviced for all year round operations as GAA is rated from 225º F down to -50º F. A simple check for proper adjustment is all that is required.

(2) Hydraulic Brakes. A simple check for a full reservoir is all that is required – no change of fluids.

(3) Air Brakes. Drain reservoirs immediately after operation and close drain cocks immediately after draining to prevent from freezing in the open position. Failure to do this can cause condensation between the brake shoes and pads to freeze making the vehicle impossible to move. Portable heating equipment will be needed to correct this. Condensation in brake lines, chambers etc. can freeze and create failures in the braking system.

(4) Central Tire Inflation Systems (CTIS) and other vehicle air compressors can experience frozen condensation problems similar to air brakes. At a minimum, drain air tanks after operation. Check for frozen valves and report these immediately. Alcohol evaporators are part of winterization kits and are designed to draw water out of the air going into the compressors. These should be checked before, during and after operations.

(5) Steering Gear. Improper lubricants congeal making steering difficult or impossible. OHT or OEA is the proper lubricant for hydraulic power steering reservoirs. DEXRON II should not be used.

Preparation for Operation and Vehicle Winterization

Conduct PMCS using TM; see operation under other than usual conditions

Wheel Bearings

Hydraulic Braking Systems; check brake reservoirs; no special lubricant required

Air Brake Systems – ensure valves are operational and that air tanks are drained to prevent condensation from forming and freezing

CTIS and air compressors – same check as Air Brake systems

Steering Gear fluid reservoirs have correct fluid

(6) Shock absorber fluid may congeal at low temperatures resulting in a hard riding shock or broken shock absorbers. Check that they are still mounted securely to the frame and under extreme cold conditions move the vehicle slowly for the first 3-5 miles of operation to allow the lubricant in the shocks to warm up.

(7) Springs can become brittle and break at low temperatures. Check clips, leaves, bolts, hangars, and shackles for proper mounting and tighten loose components.

(8) Tires become more rigid and develop flat spots when parked in extreme cold temperatures. Inflate tires in a warm environment such as motor pool, to 10PSI above normal. This allows for contraction and pressure loss once vehicle is out in the cold. Place barrier materials, (spruce branches, cardboard) under tires to prevent freezing to ground when parked for long periods of time.

(9) Winterize fire extinguishers IAW the appropriate fire extinguisher technical bulletin.

(10) Oil engine Arctic (OEA) should be used for cold weather operations. Drain the engine lubrication system when the engine is warm.

(11) Antifreeze. Ensure that proper antifreeze/water mixture is utilized. Generally a 68% antifreeze, 32% distilled water mixture offers the best protection against extreme cold temperatures.

(12) Inspect all belts and hoses for cracks, dry-rot, or breaks, and replace as necessary.

(13) Ensure vehicles have correct thermostats installed. To get the vehicle to an operating temperature that will allow the engine to operate properly, a thermostat in the temperature range of 190 to 195 degrees F should be installed in a vehicle that normally uses a 150º F thermostat.

(14) Install winter fronts or radiator shutters (radiator covers).

(15) Ensure that the vehicle personnel heater is mounted and operational.

(16) Ensure that tire chains, ice scrapers, and other equipment required for operation in cold/icy/deep snow conditions is present, and that vehicle crews are thoroughly trained in their use. Tire chains should be pre-fitted to vehicles, and their mounting/dismounting should be a crew drill.

Preparation for Operation and Vehicle Winterization (cont.)

Shock Absorbers
Springs
Tires
Fire Extinguishers winterized
Oil Engine Arctic (OEA)
Belts and Hoses
Thermostats
Winter Fronts or radiator shutters
Vehicle personnel heaters mounted and operated
Tire chains, swingfire heaters ice scrapers etc. are present

b. (Slide 13) Vehicle operation. Vehicles must be tuned and serviced prior to the onset of the winter. Cold will cause an improperly tuned motor to run even less efficiently. Always PMCS vehicle before, during, and after vehicle operation. Follow the TM when doing so. Some additional considerations for operations are:

(1) Heat retention devices such as winter-fronts and higher temp thermostats must be installed to allow efficient operation.

(2) Start engine and allow vehicle to idle for approximately 5 minutes before moving. Drive slowly at first, allow time for moving parts to reach operating temperatures before increasing engine speed.

(3) It may be necessary to start and idle vehicles periodically to prevent the vehicle engine from becoming cold soaked and to warm lubricants. The rate at which this is done is based upon the ambient temperature. As temperatures dip below -25 F, it may be necessary to idle vehicles for longer periods or at times continuously. One rule of thumb is to run the vehicle for 20 minutes every 2.5 hours. It should be remembered that this will shorten the life span of engine components, increases fuel consumption and discharges batteries. It can compromise positions due to exhaust output and heat signatures. It may also increase the chance of carbon monoxide poisoning.

(4) Downgrade all hoist and winch capabilities. Certain metals will lose up to 50% of their shock load tensile strength at temperatures of –20°F or colder.

(5) Ensure that correct engine idle is set for proper battery charge (usually 1100-1200 rpms). This may have to be increased or set higher for vehicles that operate as a command or communications vehicle and run for longer periods.

(6) Remove ice and snow from windows.

(7) If CTIS equipped, select mode for this type of terrain; watch for indicator showing correct mode selection on CTIS panel and adhere to speed restrictions.

(8) Place vehicle into motion by following general operating procedures in the applicable vehicle TM under "operation under unusual conditions."

(9) Begin movement in second or third gear (manual transmission) rather than first or low. Engage clutch gradually to prevent wheel spin. Drive slowly at first; allow time for moving parts to reach operating temperatures before increasing engine speed.

(10) For automatic-transmission-vehicles use D2 range and gradually apply throttle.

(11) Avoid quick acceleration.

(12) Drive at reduced speed for better control and safer stops.

(13) Display turn signals earlier than usual (if tactical situation permits).

(14) Maintain at least double the normal following distance from the vehicle ahead.

(15) Pump brakes to give early warning to those following of your intention to stop (Non ABS).

(16) Apply steady brake pressure earlier when stopping for warn others of your intentions (ABS only).

(17) Descend moderate grades in the gear normally used to climb the same grade.

(18) Install tire chains prior to vehicle operation.

Vehicle Operation

Vehicles must be properly tuned prior to use

Heat retention devices should be installed

Allow engine to warm for at least 3 minutes prior to movement

From -20°F to -60°F, periodic starting/movement may be necessary to keep vehicles operational

Downgrade hoists and winch capacities by half

Engine idle must be as indicated in TM to maintain battery charge

SECTION IV. SUMMARY

You now have a general understanding of some of the challenges associated with operating vehicles in the cold weather and some techniques to overcome these problems. Refer to equipment specific manuals for more detailed information on cold weather operation.

Check on Learning.

1. At what temperature does the cold start to significantly effect most military equipment?

At temperatures below 10 degrees F, the cold will start to have a significant effect on most military equipment.

2. What type of batteries are preferred in the cold weather environment?

Lithium type batteries are preferred in the cold weather environment. NiCad will also work well provided the “memory” is erased prior to recharging these batteries.

SECTION II. INTRODUCTION

Motivator: Weapons, the lubricants used to maintain weapons and ammunition are all adversely affected by cold weather. You must understand these effects and you must be able to take steps to reduce these effects in order to keep your weapon working.

Terminal Learning Objective

ACTION	Maintain weapons in cold weather
CONDITION	In temperatures of 32º F to -60 ºF, given assigned weapon with technical manual.
STANDARD	Identify common problems with weapon systems that are caused by the cold weather. Take steps to reduce or eliminate problems caused by the cold before, during, and after operations.

Safety Requirements: For classroom training discuss emergency procedures in case of fire or natural disaster.

Risk Assessment: Low

Environmental Considerations: None

Evaluation: You will be tested on your knowledge of weapons use in cold weather during a one hour written examination at the conclusion of the course (Refer to training schedule for date/time of exam). You must score a 70% on the written exam. If you fail the written exam, you will be given a second exam after re-training has been conducted. If you fail this second examination, you will be dismissed from the course.

Instructional Lead-In: This lesson will give you some common effects of cold on weapons and ammunition as well as some tips and procedures to reduce or eliminate problems associated with maintaining and firing weapons in the cold.

SECTION III. PRESENTATION

Learning Step/Activity 1 – Describe the effects of extreme cold weather on weapons and describe techniques for ensuring weapons function in the cold weather environment.

a. (Slide 18) Sluggishness. Weapons will function under extreme cold conditions, if given proper care. Lubricants that are normally used under temperate conditions, such as CLP, thicken in cold weather and stoppages or sluggish weapon action will result from their use. CLP will freeze at –35F. To eliminate this problem, the weapon must be completely stripped, thoroughly cleaned, and lubricated with LAW (Lubricating oil Arctic, Weapons). As a minimum, the camming surfaces of the bolt should be lightly oiled with LAW. The rest of the weapon can be left dry. LAW is not available in the refillable half ounce bottles normally found in weapons cleaning kits, but is available in larger sized one quart containers (NSN 9150-00-292-9689). If LAW is not available, use a dry graphite lubricant or fire weapon dry.

b. Condensation on Weapons.

(1) Condensation forms on weapons when they are taken from the cold into a warmer environment. This is called "sweating". If weapons are taken back into the cold without removing the condensation this "sweat" can turn to ice, which will result in stoppages. For this reason, it is best to leave weapons outside when temperatures are below freezing. When left outside, weapons should be readily accessible, but sheltered, so that ice and snow will not get into the working parts of the weapon (sights, barrel).

(2) If necessary, weapons may be taken inside for cleaning. The condensation or “sweating” will continue for approximately one hour after introduction of the weapon into a warm shelter. Wait until the “sweating” process has concluded, then, begin to thoroughly clean the weapon. If weapons are to be kept in heated shelters, they should be kept near, but not on, the floor to minimize condensation.

Weapons: Common Problems and Solutions

Sluggishness:

- ***CLP thickens in cold conditions and freezes at -35º F***
- ***Lubricate with LAW; if none available weapon should be fired dry***
- ***Graphite lubricant is another option***

Condensation:

- ***Occurs when weapons are brought into heated shelters; condensation freezes when the weapon is taken back into the cold***
- ***Store weapons outside***

c. (Slide 19) Fouling from Snow and Ice.

(1) To keep snow and ice out of a weapon, some type of cover is needed. Request muzzle caps from the unit armorer, they are expendable and will do the job. If none are available, you may have to improvise. Some ways of doing this are: using plastic bags, tape, or condoms. Keep ejection port covers closed.

(2) Another recommendation is to carry something to de-ice a weapon should part of the weapon become frozen. Windshield wiper fluid carried in a small bottle has been used successfully; aircraft deicer and antifreeze are other options. Periodic cycling of the weapon will also keep parts from freezing.

(3) Operate the action on weapons periodically. This can help identify icing issues.

d. Visibility Issues. A visibility problem can be encountered when weapons are fired in still air conditions where temperatures are below –30°F. As the round leaves the weapon, the hot propellant gases cause the water vapor in the air to condense. These droplets of condensed water vapor then freeze, creating ice particles which produce a cloud of ice fog. This fog will hang over the weapon and follow the path of the projectile, obstructing the gunner's vision along his line of fire, as well as revealing his location to the enemy. When faced with this problem, fire at a slower rate and/or relocate to an alternate firing position.

Tests have shown that even in warmer temperatures, a fog will develop around the gun from hot gases and the breath of the gunner, making it difficult to observe the strike of rounds. For crew served weapons, the assistant gunner may need to take up a position further left or right to help with adjustments. For individual weapons frequent changes in position may be required. When using optics in the cold, care must be exercised to keep the users breath from condensing on the sight. Even the warmth put out by the close proximity to the face can cloud the sight. Allow a stand off between the eye and the sight. When taken from a cold to a warm environment the optics must be allowed to adjust to the new temperature slowly to avoid cracking the lens.

e. Breakage and Malfunctions.

(1) Extreme cold causes metal and plastic to become more brittle than it is at warmer temperatures. Breakage generally occurs early when a cold weapon is fired; the metal is heating and rapid, unequal expansion of parts is occurring. Unit armorers will need to carry extra parts. Begin firing small arms at a slow rate of fire in extreme cold weather, if the tactical situation permits. This will greatly reduce the likelihood of the weapon malfunctioning.

(2) Freezing of moisture produced by sweating or the accumulation of snow or ice in the weapon will also cause malfunctions and stoppages. After a weapon has been fired, the heat it has generated can cause any snow or ice it comes into contact with to melt. This water will then re-freeze and may cause the weapon to malfunction. Again a deicer can be used to thaw the weapon and keep it working properly. Cycle the weapon periodically.

Weapons: Common Problems and Solutions (cont.)

Fouling from Snow and Ice

- ***Use muzzle covers or improvise***
- ***Use a de-icer for frozen weapons***

Visibility

- ***Ice Fog at -30º F; difficult to observe strike of rounds; gives away position***
- ***Frequent position changes may be needed or observer to spot/adjust rounds***

Breakage and Malfunctions

- ***Extreme cold increases the chance of metal and/or plastic component failures***
- ***Slow firing rates to allow the weapon to warm gradually***

f. (Slide 20) Emplacement Issues. Crew-served weapons requiring some type of base or platform for firing need special consideration. Emplacement of a weapon on snow, ice, or frozen ground, may result in breakage, or inaccuracy because of sinking, or the inability to absorb shock. Emplacements relating to particular weapons will be discussed in the section pertaining to that weapon.

g. Reduced Velocity and Range of Projectiles. As temperature drops, so does the muzzle velocity, and thus the range of projectiles. This is because of a change in both internal and external ballistics.

(1) Internal Ballistics. This occurs inside the weapon; the burning rate of propellant decreases, thus the rate of gas expansion decreases and in turn the rate at which the projectile moves down the barrel decreases.

(2) External Ballistics. This occurs after the projectile leaves the muzzle. Decreased muzzle velocity reduces the stability of the projectile as it leaves the muzzle, possibly causing the projectile to tumble. At longer ranges this further reduces velocity and accuracy. Colder air is denser than warmer air which may create increased drag on the projectile thus further decreasing range.

Weapons: Common Problems and Solutions (cont.)

Emplacement Issues

- ***Deep snow and frozen ground present problems***
- ***Various techniques discussed for specific weapons systems***

Reduced Velocity and Range of Projectiles

- ***As temperature drops so does muzzle velocity and thus the range of projectiles***
- ***Internal Ballistics***
- ***External Ballistics***
- ***Re-zero weapons in extreme cold conditions***

h. (Slide 21) Automatic Weapons have a high rate of breakage and malfunction due to cold weather. Especially affected are the sear and bolt parts. Gun crews must carry extra parts of this type. One common malfunction is short recoil where the bolt does not recoil fully to the rear. A second malfunction is caused by the freezing and hardening of buffers. This causes great shock and rapid recoil, increasing cyclic rate and can cause parts to break. All internal components and friction surfaces of machine-guns should be coated with LAW. These small arms should be fired cold and dry if LAW or CLP is not available. Firing should begin slowly at first to allow the weapon to warm; short two or three round bursts at short intervals are sufficient until the weapon components warm. Machine-guns should be test fired in cold weather prior to combat deployment to a cold weather area of operations. Ammunition must be transported in enclosed drums or cans to prevent snow fouling. It should be kept at the same temperature as the weapon. All weapons should be re-zeroed in extreme cold. Some specific weapons considerations:

(1) 9mm Pistol

- Breakage of moving parts is rare, but some breakage of the extractor and the firing pin can occur.
- This weapon is affected by condensation more than other weapons, due to the fact it is most often carried by personnel whose duties require them to frequently enter and exit heated shelters and vehicles. Freezing generally occurs around slide and magazine well.

(2) M16A2/M4

- Little breakage will occur if the weapon is fired at slow rate of fire until warm.
- Breakage usually occurs around the extractor, ejector, and firing pin.
- Condensation in the buffer tube will decrease the shock absorbing ability, which may result in breakage or reduced recoil, which can result in the omission of the cocking step in the cycle of operation. Wipe the buffer tube out frequently to remove condensation and reduce the chance of having the weapon malfunction.
- Re-zero the weapon when deploying from a temperate to a cold environment. Cold temperatures may cause a decrease in the burning rate of propellants, which can significantly change projectile trajectories. In effect, this will nullify the zero of the weapon. Remember that altitude will also have an effect on a weapon system, and when a significant change in altitude occurs the weapon should also be re-zeroed.
- When wearing mittens or bulky handwear open the trigger guide for firing. Keep the trigger guard closed but unlatched for safety when not in use.

(3) M249

- High rate of breakage due to the large number of moving parts. Armorers should carry plenty of spare parts, especially those most prone to failure. (firing pins, extractors, feed pawls, etc).
- The M249 safety selector switch is extremely difficult to operate when the weapon is cold soaked.
- Buffer group assemblies are affected in the same manner as the M16/M4. A common malfunction is short recoil (bolt does not recoil fully to the rear) which occurs early in firing. Apply immediate action procedures until metal warms.
- When changing barrels, avoid placing a hot barrel in the snow – the rapid cooling of the barrel may warp it and will cause condensation to freeze in the barrel.
- The ammunition must be protected. Un-protected belts are a sure way to introduce ice into the weapon when firing.
- Semi- permanent platforms may be constructed by attaching ski pole baskets or snowshoes to the bipod. Ski pole baskets only work well in hard or compacted snow; issuing an extra snowshoe without bindings to weapons crews is preferable.

(4) M240

- The same considerations as the M16/M249 apply to this system.
- Emplacement considerations may be more involved.
- For the bipod, apply the same techniques mentioned for the M249 (ski baskets or snowshoes. Testing has shown that resting the weapon on a ruck does not provide a stable platform and makes it difficult to operate from the kneeling (to low) or the prone (to high) position.
- For the tripod, the ahkio may be used as a platform. On hard ground or ice each leg will need to be seated in a slot that is chipped out to fit the base of each leg. Ice screws or pitons driven

(5) M2

- The same considerations as the M16/M249 apply to this system.
- For the tripod, see the techniques noted for the M240. Sandbags have also been used to provide a stable platform for the tripod on hard ground, but tests have shown the bags to rip after 300-400 rounds.

Rifles and Automatic Weapons

Re-zeroing required for all weapons systems

High rate of breakage; require test firing prior to deployment.

Units must carry extra parts

Short recoil and buffer freezing causes malfunctions

Begin with slow rate of fire

i. (Slide 22) MK 19 Automatic Grenade Launcher

(1) Use GMD lubricant at low temperatures.

(2) Use cloth covers rather than plastics to protect the weapon from the elements. In addition, plastic or rubberized covers can become stiff or brittle in the cold. This may result in difficulty removing them (especially when you must do so in a hurry) or in damage to the cover.

(3) Use the same techniques for the tripod as the M2/M240.

MK-19

Use GMD at temperatures below -25º F

Use cloth covers rather than plastics to protect the weapon from the elements

j. (Slide 23) Mortars

(1) Hand protection must always be worn (contact gloves). The gloves must not be loose, because when the ammo is being dropped into the tube, a vacuum occurs which can suck the glove into the tube creating a hazardous situation.

(2) Breathing on sites, or on the mortar ballistic computer will cause fogging and freezing of equipment.

(3) Muzzle and sight covers should be used when not firing the weapon to prevent snow and ice from entering the tube.

(4) The Mortar Ballistic Computer is programmed to accept temperatures down to –50°F. This automatically compensates for cold-induced slow burning of charges when computing firing data. The MBC is not programmed for temperature inputs colder than –50°F.

(5) Aiming stakes will become loose when placed in snow. Utilize sandbags or an anchoring device to keep them in place once set.

(6) Base plates become brittle when exposed to the extreme cold, this, coupled with the decreased ability of frozen ground to absorb shock, results in base plates being more prone to breakage than normal. Base plates must be dug in if possible, to prevent the base plate from skipping. Shock absorbing materials such as spruce branches, sandbags, even ice chips or soil should be used for absorbing recoil during firing, but not to an extent which will allow the base plate to bounce out of the hole that has been dug for it. Demolitions may be used to prepare a firing position quickly (1.25 lb block of C-4 works well). After emplacement base plates may be hard to remove.

(7) Swab bores thoroughly after each mission to remove any excess propellants.

(8) VT fuses are not preferred due to the severe dampening effects of snow. Airbursts are preferred. Malfunctions will occur in direct proportion to the severity of the weather.

(9) The rubber tube cover may harden and become extremely difficult to remove as temperatures fall.

(10) When firing in drop mode, expect greater number of misfires. Using the trigger will correct this.

Mortars

Temperature below 10°F, lube with LAW, (9150-00-292-9689) instead of CLP, (9150-00-231-2361)

Wipe inside of bore dry before going out into the cold

Cover cartridges

Keep fire control instruments in their cases

Cushion base plate

Use anticontact gloves for dropped rounds

k. (Slide 24) M136 (AT-4) Antitank Weapon

(1) Plastic and rubber components become brittle and can crack in extreme cold.

(2) Ice fog and vapor trails will occur when weapon is fired.

(3) Gunner must wear a facemask or scarf when temperatures reach –15°F to prevent icing of sight.

(4) Sights are more difficult to release from their covers.

l. M220 Series TOW Weapons System

(1) Can be effectively used in temperatures down to –25°F; can be stored down to -65°F.

(2) Double the backblast danger/caution area size if the temperature is below 0°F.

(3) In extreme cold the heat from the engine can distort the image in the sight. Fire the weapon over the back or side.

m. MANPADS (Stinger)

(1) Additional interrogation/tracking time will be required due to temperature-related diminished battery performance.

(2) The Nickel-Cadmium battery must be fully charged.

(3) Double the backblast danger/caution area size if the temperature is below 0°F.

n. Javelin.

(1) The javelin has a slight drop when fired in the cold; be cognizant of this when using from defilade or reverse slope positions.

(2) Can be effectively used in temperatures down to –25°F; can be stored down to -65°F.

Missile Systems

The TOW, Javelin and Dragon can be used down to -25 F and can be stored down to -65

Double the back-blast area of all missile systems

The Javelin will drop when fired in the extreme cold; the weapon should not be fired from defilade or reverse slope positions

o. (Slide 25) Grenades.

(1) Fragmentation grenades suffer a reduced causality-producing radius due to energy dissipation in the snow.

(2) Smoke grenades are useless unless placed on a platform to prevent them from sinking into the snow. Taping or wiring a grenade to a stake which can be driven into the snow works well.

CAUTION: SOLDIERS USING GRENADES MUST ENSURE THAT THEIR GLOVES OR MITTENS ARE DRY. FAILURE TO DO SO MAY RESULT IN AN ARMED GRENADE FROZEN TO THE THROWER'S HAND.

p. Demolitions.

(1) C-4 hardens making it difficult to insert blasting caps. In extreme cold conditions, C-4 has shattered from the blasting cap rather than detonating.

(2) Detonation cord becomes brittle and may break and will be more difficult to tie in cold weather.

(3) Time fuze tends to retain its curl and will break when unrolled.

(4) Condensation contributes to the incidence of misfires. Hangfire and misfire waiting times should be doubled.

Grenades and Demolitions

Smoke grenades should be deployed on a platform, hard ground or wired to a stake

Grenades may stick to gloves/mittens if either item is wet

C-4, detonation cord and time fuse may need to be re-warmed prior to use

Double hangfire and misfire waiting times

SECTION IV. SUMMARY

This lesson presented you with some basic considerations for firing and maintaining weapons in the cold weather. During the remainder of the course you will have an opportunity to put these techniques and procedures into action as you fire and maintain your weapon.

Check on Learning.

1. What should be used to lubricate weapons in the cold weather environment?

LAW is preferred because CLP thickens and eventually freezes at -35º F.

2. What is one consideration when taking weapons from a temperate climate to a cold weather environment?

You must re-zero weapons because the ammunition does not perform the same at cold temperatures.

SECTION II. INTRODUCTION

Motivator: While it is unlikely that you will use skis on a foreign battlefield, it is a fact that you will train to fight here in Alaska. For much of the year the terrain is snow-covered. During training exercises, if you do not have either skis or snow shoes, you will be at a distinct disadvantage and training will be confined in and around cleared roads and trails. Skiing is also an excellent means to conduct physical training with the added benefit of additional cold weather training.

Terminal Learning Objective

ACTION	Move over snow on skis
CONDITION	Given the military ski, NATO bindings, ski poles and vapor barrier boots (or other appropriate ski equipment as prescribed by unit), rucksack (with a minimum load of sleeping bag, sleeping pad, extra pair of socks, extra pair of mitten inserts and wax kit, additional packing list items may be prescribed by unit), ECWCS, other issued cold weather clothing items, ballistic helmet, LCE with 2 quarts of water, weapon and a 5 kilometer snow-covered course with varied terrain.
STANDARD	Complete a 5 kilometer ski movement. Meet all critical performance measures IAW the student evaluation plan.

Safety Requirements: Daily Risk Assessment conducted. Medical personnel must be on site during all ski training events. OIC/NCOIC must have medical evacuation plan ready for soldiers injured during ski training.

Risk Assessment: Medium. May be upgraded based upon weather/terrain conditions.

Environmental Considerations: Refer to MSDS sheets for specifics on waxes, ski base cleaners in use in the NWTC ski room. Ensure that manufacturer recommendations are adhered to when using these products.

Evaluation: You will be evaluated on your ability to complete a 5K ski movement. Students with prior skiing experience may not test out. The reason for this is that all students must understand the logical progression of a ski training program as conducted by the military. Students that fail WILL NOT have the opportunity to re-test.

Instructional Lead-In: During this period of instruction you will learn the nomenclature, maintenance and fitting of your skis. Once your skis are fitted you will learn the techniques to move over snow covered terrain.

SECTION III. PRESENTATION

Enabling Learning Objective A:
Ski Lesson 1: Introduction and Fundamentals

ACTION	Prepare Skis and Skiers for travel over snow
CONDITION	In an appropriate maintenance facility (for preparation, fitting and maintenance of skis) and on flat snow covered terrain with military skis, bindings, poles and appropriate boots for temperature range (as determined by instructor during daily risk assessment) (or other appropriate ski equipment as prescribed by unit)
STANDARD	Soldier properly fit skis, ski bindings. Soldier waxed skis for current conditions. Soldier stretched prior to ski training. Soldier demonstrated proper athletic stance, proper use of ski poles, proper controlled falls and recovery from falls, walking and shuffling on skis and step and kick turns on skis.

Learning Step/Activity 1 – Describe skis and bindings and describe the military ski and NATO 120 binding.

a. There are many skis on the commercial market today. Classic cross-country, skate cross-country, backcountry wax less, backcountry waxable, Nordic, alpine, telemark, fat skis, skinny skis, and twin tipped skis and the list goes on. Don't forget about boots, poles and bindings. Selection of a single pair of skis for military purposes can be a daunting task. Because the purpose of military skiing is to move troops cross country in snow covered terrain, the ski should provide flotation for soldiers carrying heavy loads, allow them to move cross country over unbroken trail and have metal edges to allow soldiers to make turns to control speed on downhill sections. There are no skis, ski poles or bindings in the Army inventory; the policy is that units with the need for skis can obtain them through contract purchase. Black Diamond (www.bdel.com) makes collapsible ski poles with a fool proof locking mechanism called the flick-lock. It is better than most other designs where the locking mechanism is inside the pole making it difficult to repair.

b. Parts of a ski:

(1) Tip. In your ski tips there is a hole that can be used to drag skis or improvise a litter.
(2) Shovel. Upturned portion of the ski that provides flotation on snow by keeping it on the surface of the snow.
(3) Waist. This is the middle third of the ski.
(4) Tail. Back of the ski. The metal groove cut into the tail on some skis is for climbing skins.
(5) Base. Plastic bottom of the ski.
(6) Edges. Metal rails on the sides of the ski. They are used to grip the snow in a turn.
(7) Side cut. Difference in width at the shovel, waist, and tail. It is not used in all skis. Cross-country skis will have little or no side cut, whereas Alpine skis can have very dramatic side cut. More side cut means easier turning.
(8) Camber. The bow or concave arch in the middle of the ski. The amount of camber will determine the use of the ski. A single camber ski is best suited for downhill skiing, but will perform as a cross-country ski. Double camber skis are suited for groomed trail cross-country use only and are only marginally effective for downhill use. The only true double camber skis are classic cross country racing skis which are not appropriate for the backcountry.

- A camber and a half (also known as Nordic camber), creates an arched and stiff section in the center of the ski. This forms a center wax "pocket". A soft wax is applied to this area of the ski. This forms an area that will grip the snow, thus giving you traction and allowing you to kick to move yourself forward. Nordic and cross-country skis often have a groove down the center base of the ski. This groove allows the skier to track in a straight line.

- Single camber skis, (also known as alpine camber), distribute the weight more evenly over the entire running surface of the ski. It also allows a rebound effect from turn to turn. When flexed (that is when you are standing on them), alpine cambered skis should from a smooth arc with

no wax pocket. The military has generally selected a ski with single camber to a camber and a half.

(9) Top sheet. Top portion of ski that covers the core. Painted white for camouflage.
(10) Core. Wood or plastic guts of the ski. Gives the ski its load bearing capacity.

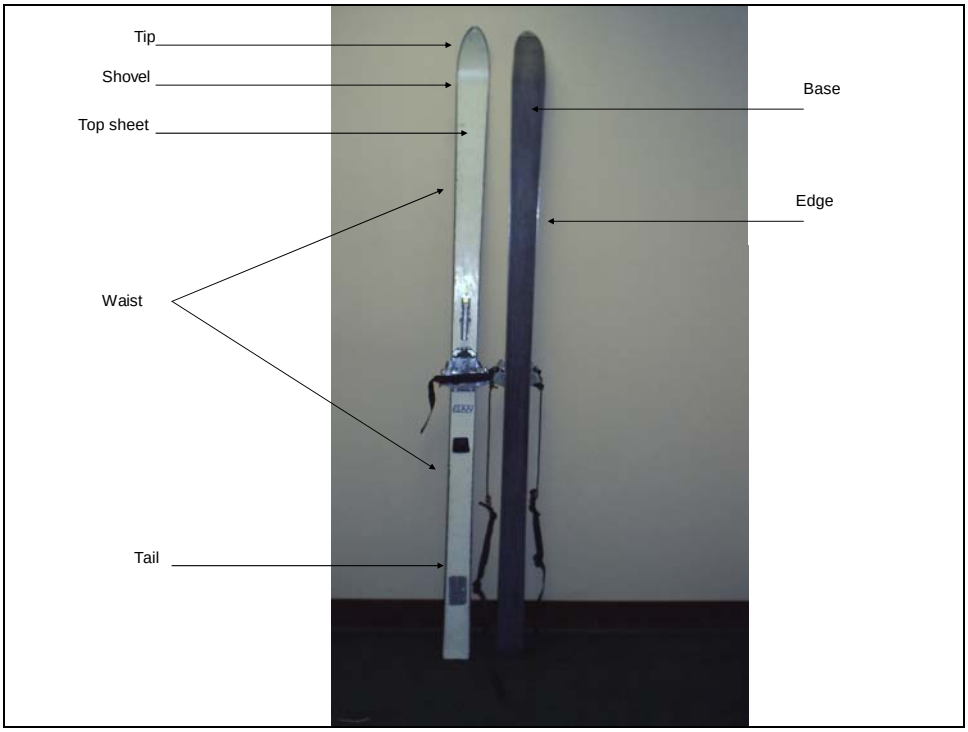

Military Ski w/ NATO 120 binding

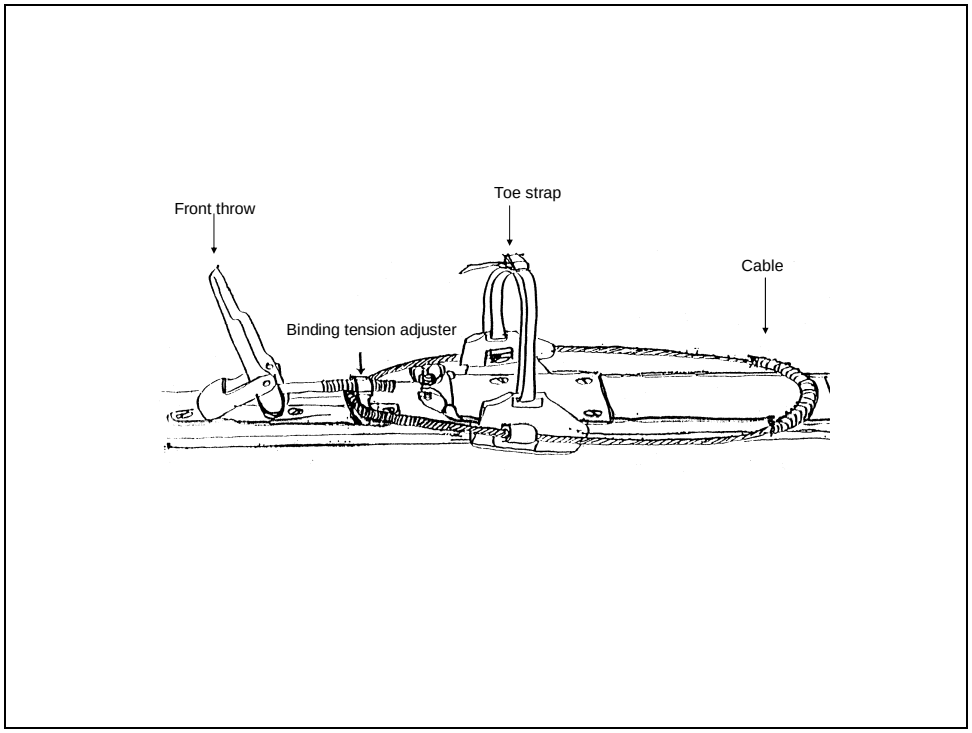

NATO BINDING

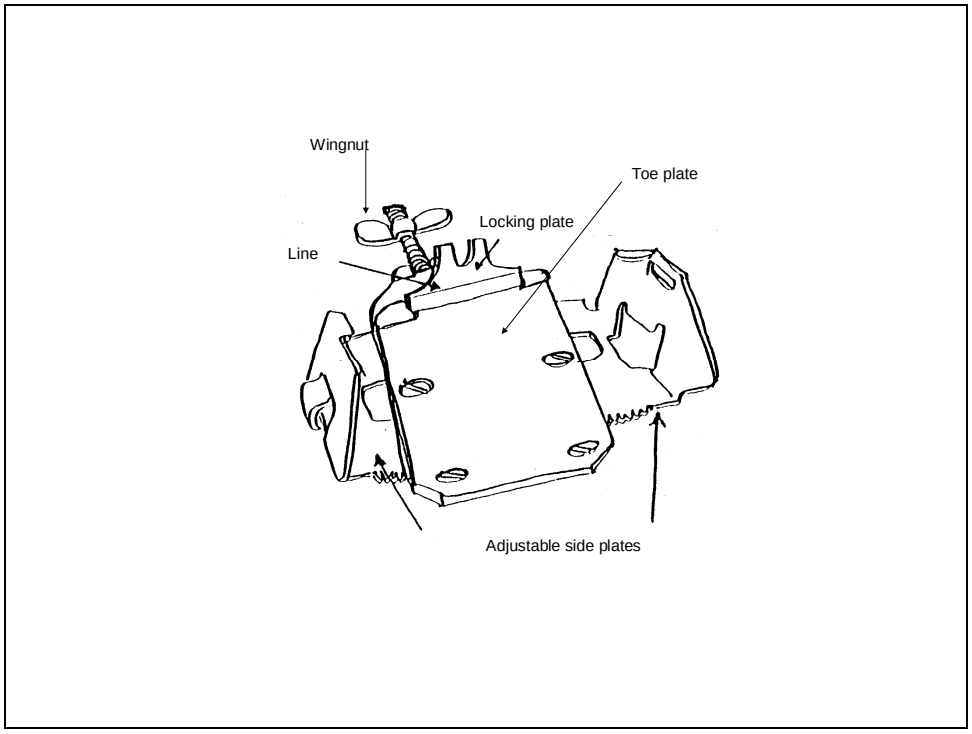

Detail of NATO Binding

Learning Step/Activity 2 – Issue the appropriate ski to Soldiers.

a. Military skis come in sizes, 180 to 200 cm. Soldiers who weigh less than 160 lbs use 180 cm and over 160lbs use 190cm. Soldiers 200lbs or more use 200cm skis.

Learning Step/Activity 3 – Issue the appropriate ski poles to Soldiers.

a. Ski poles are adjustable.

(1) For downhill skiing, you should have a 90° angle at your elbow when holding the ski pole.
(2) For cross-country, lengthen poles to chest height.

Learning Step/Activity 4 – Maintain skis.

a. Cleaning- The first thing in ski maintenance is to clean any wax and dirt off of the base. This can be accomplished by using Simple Green or a Citrus Cleaner made for skis. Apply the cleaner liberally to the ski base. Then using a ski wax scraper, scrape old wax off. When using a scraper insure that it rides on the edges so that it does not gouge the base of the ski. Once this is done there may still be wax remaining. To remove it simply reapply the cleaner and using a green scratch pad or equivalent item, rub wax off of the base and dry with a clean paper towel. If any wax remains in a gouge in the ski base than remove it carefully with the comer of a scraper or a fingernail.

b. Once the base is clean, take a simple mill bastard file or a ski edge tuner and file the edges to a 90-degree angle, removing any burs in the edges. Next round the edges from the tip to just past the shovel and from the tail six inches toward the waist. These areas of the edges do not need to be sharp. At this time if any repairs need to be done the ski is ready. First take a true bar or any straight edge that will not bend. Start at the tip of the ski. Place the true bar across the edges and look for light under the bar. Now work toward the tail. If the ski base is flat, there should not be any light under the bar. If there is light under the ends of the true bar, the base is convex and the plastic or P-tex base should be taken down with a plastic or metal scraper. If there is light in the middle, the edges will need to be filed until they are flush with the base.

c. If there are scrapes or gouges in the base then take a P-tex repair candle, which matches the color of the ski base, for the repair. Light the repair candle over the flame of a regular candle. Then hold the repair candle over a metal scraper until a blue flame appears. By rotating the repair candle between the thumb and forefinger, dark soot deposits will be minimized. Hold the repair candle close to, and parallel to, the ski to maintain the blue flame. Once the gouges have been filled in, allow the repairs to cool to the touch. Next scrape the ski base with a scraper to remove excess P-tex until the base is smooth. Now the ski base is ready to wax. If more severe damage has occurred and cannot be repaired then exchange the skis, or take them to a ski pro shop for professional repair.

d. All metal should be kept free of rust.

e. Inspect binding for broken parts and replace as necessary.

f. The ski pole requires less maintenance than the ski. Simply repaint when necessary. Replace ski pole baskets when they are damaged. Make sure that the wrist leashes are there and that they are serviceable.

Learning Step/Activity 5 – Fit the NATO binding to the Vapor Barrier Boot (or other issued boot as required).

a. There are four different cable lengths used with the NATO 120 binding, each with a different color heel piece over the cable. Cables can be interchanged from one binding to another. NATO 120 bindings are no longer in production. The following is an approximate listing of the Vapor Barrier boot sizes the cables fit:

Cable color	Boot size
Red	6-9
Yellow	8-11
Black	10-13
Blue	11-15

NOTE: The cables to boot size are a guide; some boots may fit differently.

b. To fit the binding to the boot:

(1) Loosen wingnut to free adjustable side plates.
(2) Place boot In binding so that the toe of the boot is in line with the line on the locking plate and the heel is centered.
(3) Adjust side plates so that there is maximum contact with the sides of the boot. Engage the locking plate and tighten wing-nut.
(4) Adjust binding tension adjuster so that the cable is within 1/2 inch of the heel tab with the front throw in the open position.
(5) Adjust toe strap to keep the toe firmly in the binding, but not too tight as to restrict circulation.
(6) Remove boot and carefully adjust side plate's inward one notch. Reengage locking plate and re-tighten wing-nut. Adjust wing nut so that its long axis is perpendicular to the long axis of the ski. This will minimize damage to the toe of the boot.

Learning Step/Activity 6 – Prepare skis for movement (Wax skis).

a. Waxing. Military skiing needs a method that is simple and effective. The two wax system, supplemented with klister provides maximum performance for most conditions while minimizing the amount of wax carried. Wax works when pressure is applied to the ski in the snow. Snow crystals penetrate (grip) the wax giving the ski traction on the flats and uphill. When the pressure is released and the ski is slid forward, the snow crystals release the wax and the ski glides on a thin film of water. The film of water is formed by the friction between the ski and the snow. If the correct wax is applied properly, the snow crystals will grip during the kick and release during the glide. The ski will be too slippery if the wax is too hard or too thin. If the wax is too soft or too thick, the ski will be too sticky.

b. The two wax system is designed for a wide range of temperatures and conditions. A hard wax for dry, powder snow below freezing. A soft wax for wet, powder or packed snow, above freezing. First select the proper wax for the temperature and snow condition. Remember, if a hard wax is applied first, then a soft wax can be applied over it. But there is no way to apply a hard wax over a soft wax for it to be effective. It is like putting peanut butter over jelly. Next crayon the wax evenly over the entire base of the ski, six inches from the tip to within six inches of the tail. Using a cork (natural or synthetic) spread and smooth the wax on the ski base. Applying several light coats is better than one thick coat. If you do not have the cork then you can use a leather glove or the trigger finger mittens.

c. If skis are too slippery and are not getting any grip, apply the ***TLC principle*** one step at a time until the desired effect is met:

- ***T***hicken the layer of wax,
- ***L***engthen the amount of wax in the middle 1/3rd of the ski
- ***C***hange to a different wax.

d. If the skis stick and will not glide, use a scraper to remove some of the wax.

e. Use the two wax system for snow in its original state. Use klister for snow that has melted and refrozen, or very old, wind hardened or crusty. There are two types of klister to match conditions. Universal, for changing corn snow conditions from 23 degrees to 50 degrees Fahrenheit. Green, for extremely cold conditions on old or refrozen snow. To apply klister, simply apply two thin strips to the waist of the ski. Then quickly spread the klister over the ski base with a plastic scraper.

f. Applying wax to a ski is best accomplished in a warm place with a warm ski. Cold temperatures and frozen skis make it difficult cult to apply wax.

Learning Step/Activity 7 – Stretch and warm-up for skiing.

As in any athletic activity, you should stretch and warm-up prior to beginning any ski activities. Some of the stretches and warm-up exercises that are appropriate are:

(1) Hamstring stretch.
(2) Thigh stretch.
(3) Calf stretch.
(4) Side Straddle Hops.
(5) High jumper.

Carrying a weapon. Attach the sling to the rear sling swivel and the slip ring (where the hand guards attach to the receiver). Hang the weapon over your neck and firing side shoulder, muzzle down. The weapon can be placed behind the canteen on the firing side hip to keep it out of the way while using ski poles. Or attach the sling at the slip ring and the small of the butt stock and hang in the same manner. Another method is by use of a “three point sling” available commercially.

Learning Step/Activity 8 – Demonstrate the athletic stance.

NOTE: Start with the students on line. Students do not need poles at this point. Ensure that the wind, sun or any other distractions are to the student’s back. This is applicable whenever talking your students through any of the ski lessons.

a. The athletic stance is a stable, relaxed, in balance position that allows you to react quickly and easily. To do it – relax your back muscles and cup your upper body pulling your navel in towards your backbone. Your weight should be centered over both your feet and your feet should be about shoulder width apart. The ankles should be flexed and the knees slightly bent. Think about catching a basketball with both hands – this will put your arms and hands in the correct position.

b. Get the feel for having skis on your feet. Try picking up one ski at a time. Push the toes down towards the ground and then raise the toes up. Now rotate the ski to the left and right. Try it with the other ski. This is rotary motion and will help you point the ski in a desired direction.

c. In the athletic stance rock back and forth on your skis from your heels to your toes. You should feel in control. Now stand straight up, arch your back slightly and try the same thing.

NOTE: Some students may fall. Good transition to the next LSA.

Learning Step/Activity 9 – Demonstrate proper controlled falls and recovery on flat snow covered terrain.

a. Controlled falls can help to prevent injury.

b. The easiest method is to just sit down. Attempt to keep the skis parallel and relax into a seated position. The idea is to land on the buttocks, and the meaty portion of the thigh and calf.

c. Recovery is easier with poles but not necessary. First pull the skis under the hips.
Then holding both ski poles together with the baskets in the snow, grasp the poles with one hand just above the basket and one hand near the top of the poles. Now pull up off the snow. As the hips leave the snow, step towards the ski baskets with the ski closest to the baskets and begin to stand up. On a slope the procedure is the same, but to start, you must ensure that the skis are below the body (further downhill) and perpendicular to the fall line. The uphill ski will be used to stabilize you as you stand up. If you lost a ski(s) in the fall, you should get to a standing position, and then put the skis back on, replacing the downhill ski first.

Learning Step/Activity 10 – Walk on flat snow covered ground using skis.

Do not use poles. Begin walking as you would in marching. Skis should remain flat on the snow. Transfer your weight smoothly from ski to ski. As you walk, the heel of your boot should rise naturally off the ski. Look a few feet in front of your ski tips.

Learning Step/Activity 11 – Shuffle on flat snow covered ground using skis.

a. To transition from walking to shuffling, simply add a glide to the step. Insure proper balance and weight shifts are taking place. Keep the length of the glide small – in other words try to stay balanced over the skis. Shuffle in a straight line and then in a circle.

b. Drills

(1) Scooter- Have student use one ski at a time without poles. Push with free foot and glide on the ski. Used to reinforce the glide in the shuffle and maintaining ankle alignment.

(2) Walk shuffle walk- As stated. Used to reinforce the difference between walking and shuffling.

Learning Step/Activity 12 – Demonstrate proper pole usage.

a. Ski poles are mainly used for aiding in balance. However they can also be used to provide propulsion.

b. It is important to understand how to hold the ski pole. Bring the hand up through the wrist leash and place the thumb over the wrist leash where it attaches to the top of the ski pole. Failure to follow this procedure may result in a broken thumb in the event of a fall. Adjust the straps so that they are snug through the palm of the hand.

c. While walking, the ski pole is placed even with or slightly ahead of the opposite foot. For example, the right foot and the left pole, left foot and right pole. This allows establishing timing and rhythm. To provide propulsion simply give a push with the ski pole in the trail position. After a short glide the opposite pole should be planted. Avoid squeezing the poles as this forces blood out of the fingers.

Learning Step/Activity 13 – Demonstrate the step turn.

The step turn is accomplished by opening the ski tips in small steps. To turn to the right move the right ski tip a few inches to the right. Then move the left ski tip until you are back in the athletic stance, with skis parallel. Continue to do this until you make it to the desired position. This is the simplest turning method and is easiest to master. This turn is also known as the star turn for the shape that is produced in the snow after execution of a turn.

Learning Step/Activity 14– Demonstrate the kick turn.

This turn is more difficult to master. This turn is used to reverse direction. The ski poles are used for balance. In this demo we will initiate the turn with the left ski. With your left hand plant your left pole behind you and between the tails of your skis. Plant your right ski pole between your skis. Pick up the left ski and rotate your leg 180 degrees so that the feet and skis are facing opposite directions. Now pick up your right ski and rotate it 180 degrees to match the left ski bringing your right hand and pole with you as you make the turn. On sloping terrain, always initiate the turn with the downhill ski.

NOTE: At the completion of this lesson, the instructor can move to ELO B or ELO C if snow-covered downhill terrain is not available.

Enabling Learning Objective B:
Ski Lesson 2: Hill Climbs and Gentle Descents

ACTION	Climb and descend gentle (less than 20º) snow covered hills without turning
CONDITION	On gentle snow covered terrain with military skis, bindings, poles and appropriate boots for temperature range (as determined by instructor during daily risk assessment) (or other appropriate ski equipment as prescribed by unit)
STANDARD	Soldier demonstrated ability to walk uphill, traverse hills (parallel and half-herringbone), and ascend hills using the side step and herringbone technique. Soldier demonstrated controlled falls and recoveries on sloping terrain. Soldier demonstrated kick turns and herringbone turns. Soldier demonstrated straight runs in parallel stance and telemark stance. Soldier demonstrated step turns during a downhill run. Soldier demonstrated a gliding wedge and a braking wedge.

Learning Step/Activity 1 – Climb (Walk) Uphill on skis

NOTE: This task will reinforce the need to properly wax skis.

Apply the techniques learned in ski lesson 1 to begin walking uphill. Take small steps and ensure that you place the ski flat on the snow and weight the ski by pressing the ski into the snow with the front of the foot. Some common problems are not fully weighting the ski causing it to slip backwards. Shorten your step and press firmly into the snow; sometimes you may need to slap your ski onto the snow surface. You are trying to get the wax to adhere to the snow, temporarily giving you traction. If all else is being done properly and you are still slipping, you need to adjust your wax.

Learning Step/Activity 2 – Demonstrate controlled falls and recovery on sloping terrain.

NOTE: After students move uphill, have them practice controlled falls and recovery.

a. The easiest method is to just sit down. Attempt to keep the skis parallel and relax into a seated position. The idea is to land on the buttocks, and the meaty portion of the thigh and calf.

b. Recovery is easier with poles but not necessary. First pull the skis under the hips.
Then holding both ski poles together with the baskets in the snow, grasp the poles with one hand just above the basket and one hand near the top of the poles. Now pull up off the snow. As the hips leave the snow, step towards the ski baskets with the ski closest to the baskets and begin to stand up. On a slope the procedure is the same, but to start, you must ensure that the skis are below the body (further downhill) and perpendicular to the fall line. The uphill ski will be used to stabilize you as you stand up. If you lost a ski(s) in the fall, you should get to a standing position, and then put the skis back on, replacing the downhill ski first.

Learning Step/Activity 3 – Ascend hills using the herringbone and sidestep techniques.

NOTE: Explain the concept of fall line to the students at this point. The fall line is the natural line a ball would roll if you placed it on the slope and gave it a push.

a. On short steep sections, of the slope the herringbone is an effective way to gain elevation. However, this method quickly fatigues the leg muscles and is difficult to sustain for long periods.

b. Face uphill with the ski tips spread wide to form a V with the skis. Then rotate the knees inward to put pressure on the inside edges of your skis. Now shift your weight to one ski and move the un-weighted ski forward a short step. Shift weight to the advanced ski and edge it inward. Repeat this process using the ski poles for balance in order to make progress uphill. Watch the ski tails; stepping on them can make you lose your balance and fall.

c. On very steep sections, the side step can be used. Place yourself perpendicular to the fall line with the uphill edges of your skis engaging the snow slope. Shift weight to the downhill ski. Now take

a short step with the uphill ski. Shift weight to the uphill ski and bring the downhill ski parallel with the uphill ski. Poles are used for balance. Short steps allow proper weight shift and prevent loss of balance or falls. The side step is also an effective method to go downhill and provides the most control on a steep section that you may not be comfortable with.

Learning Step/Activity 4 – Traverse hills with half-herringbone technique.

For long movements up a sustained slope, the best method that will cause the least amount of fatigue is the traverse. When traversing uphill, keep the uphill ski in the direction of travel. The downhill ski is placed in the best position to maintain balance and traction while walking. If looking at the skis, the downhill ski resembles a half herringbone position. Make sure that the direction is not too shallow (no elevation gain) or too steep (straight uphill is too fatiguing). Find a happy medium.

Learning Step/Activity 5 – Demonstrate a kick turn on a slope.

At times there will be a need to change direction. The same kick turn that you learned on flat ground is effective for changing direction on a slope. To maintain your balance, always initiate with the downhill ski. Everything else is the same as on flat ground.

Learning Step/Activity 6 – Demonstrate a herringbone turn on a slope.

a. At times there will be a need to change direction. The kick turn on a slope is difficult to master. The easiest way to change direction is to transition from a traverse to a herringbone facing up the fall line and slowly moving around into a traverse in the opposite direction. You may need to exaggerate the herringbone position to maintain a grip on the snow.

Learning Step/Activity 7 – Demonstrate straight downhill runs in both the parallel stance and telemark stance.

NOTE: Choose terrain that has a very gentle slope and has a natural run-out (i.e. no obstacles, and flat ground at the end of the slope that will naturally allow the students to come to a stop). Demonstrate to the students that you will come to a stop gradually without any effort on their part (i.e. they don't need to know how to stop).

NOTE: There are four fundamentals to skiing that must be mastered: BALANCE MOVEMENTS, ROTARY MOVEMENTS, and EDGING MOVEMENTS AND PRESSURE CONTROL MOVEMENTS. Explain these to students and define each one. It will help as you try to make corrections on technique.

NOTE: Establish a start point for students with two ski poles to serve as a gate that students can use for balance. This is necessary because students will not use poles at this point.

a. The bull fighter stance: You need to side step into position uphill from the start point (poles). Grasp the poles and maneuver your skis so that they are parallel and pointing down the ski slope. From this position, slide one ski back and forth over the snow to remove any snow that has built up on the base. Now repeat with the other ski.

b. Release the ski poles and shuffle forward. Once the skis start to move, relax, and focus on the athletic stance and keeping your weight centered over both feet. You should feel the weight more on the balls of the feet than the heels. Once you come to a stop, turn around come back up and do it again.

c. As this gets easier try a few things. Shuffle your feet back and forth without lifting your heels. Try standing on one foot then the other. Hop up and down. The point is that you need to stay ready for anything not locked into a rigid stance.

d. DRILLS:

(1) Beat boots as the student move down hill. Helps with pressure and balance.

(2) Throw a football to the student as they are moving downhill. This keeps the hands in the correct position. Also get the eyes off the ski tips, a common mistake at this point.
(3) Ski on one ski.
(4) Reach down and pick up a glove from the snow.
(5) Ski under a ski pole - the ski limbo.

e. Demonstrate the telemark position when students have mastered the above. The stance is the most important part of learning to telemark ski:

(1) One ski/foot will be downhill (also know as the front foot or outside ski). Your knee should be directly above your toes of your front foot. Both the ankle and the knee should be bent giving you a forward cant. Your front foot will be hidden from view by your font knee when you are in a good telemark position.

(2) The uphill foot or back foot is bent at the toe with the heel lifted off the back ski. You support half your weight with this ski and half with the front ski. Ensure that you are standing on the ball of your foot and not your tippy-toes Try to keep the heel of the back foot as low as you can but still off the back ski. Both knees should be snugged up together. You thighs should be at an angle to the snow. Your butt should be over the heel of your back foot.

Note: Have students do the “1000 telemarks” down the ski slope. This involves rising up and transitioning to the telemark stance with the left (or right) foot forward, then sinking into the telemark, then rising up transitioning to right foot (or left foot) and repeating until the student is proficient in transitioning. Kind of like iron mikes on skis, but the stance is tighter.

Learning Step/Activity 8 – Step turn during a downhill run.

At times there will be a need to change direction. The simplest means of doing this is to begin by straight running and place all the weight on the ski opposite the desired direction of turn. Now lift the other ski, opening the tip slightly toward the desired direction of turn. Shift weight onto the ski that you just moved on match with the other, now un-weighted ski. Continue until you have made the desired direction change.

Learning Step/Activity 9 – Demonstrate the gliding wedge.

a. The gliding wedge is the foundation from which all other ski instruction progresses.

NOTE: On flat ground demonstrate a good wedge.

b. Start with skis parallel; now push the ski tails of the ski apart until they form an inverted V shape. The tips of the skis should be about six inches apart.

NOTE: Show students narrow to wide wedges.

c. As you vary the size of the wedge, you will change the amount of pressure on the inside edges of the ski. A larger V means more edge pressure. A good athletic stance is important, no matter how wide or narrow the wedge; this means that your ankles and knees are flexed. You should start in the bullfighter stance we used earlier for straight runs and after you push off you will apply pressure to the inside of the skis and form the wedge. Glide in this position until the terrain flattens out, turn around, come back up and do it again.

d. Your edges should engage very little in the gliding wedge; the ski should be relatively flat in relation to the snow.

e. Common errors and fixes:

(1) Straight legs. Flex at the knees and ankles. Beat boots while gliding.
(2) Student turns. Weight is not centered over both skis. Feel the weight centered over both heels.
(3) Knees together causing too much edging. Flatten skis. Simulate holding a beach ball between the knees.

Learning Step/Activity 10 – Demonstrate the braking wedge.

NOTE: On flat ground demonstrate a good braking wedge.

a. Start with skis parallel; now push the ski tails of the ski apart until they form an inverted V shape. The tips of the skis should be about six inches apart. Knees should be holding a basketball; this gets the skis on edge.

NOTE: Show students narrow to wide wedges.

b. To form a braking wedge, push the knees inward while pushing the ski tails outward to engage the edges of the ski. Maximum braking occurs when the V formed by the ski is wide, the knees are angulated inward and the weight is shifted to the heels of the foot. This will increase pressure on the inside edge of both skis. This technique is used to stop!

c. Common errors and fixes:

(1) Straight legs. Flex at the knees and ankles. Beat boots while gliding.
(2) Student turns. Weight is not centered over both skis. Feel the weight centered over both heels.
(3) Cannot brake. Edges not engaged. Have student exaggerate knee and ankle flex and decrease the distance between knees.

d. Drills: Once students have been shown both techniques, have them perform gliding wedge to braking wedge at an area you choose. Also have students go from straight run to gliding wedge to braking wedge and back to straight run. Ski poles can be used as a stop sign for places you want the students to transition to a braking wedge.

Enabling Learning Objective C:
Ski Lesson 3: Basic Cross Country

ACTION	Move on skis over gentle snow covered terrain (Double Pole and Diagonal Stride)
CONDITION	On gentle, rolling snow covered terrain with military skis, bindings, poles and appropriate boots for temperature range (as determined by instructor during daily risk assessment) (or other appropriate ski equipment as prescribed by unit)
STANDARD	Soldier demonstrated the diagonal stride. Soldier demonstrated double poling.

Learning Step/Activity 1 – Demonstrate the diagonal stride.

NOTE: If time allows or you want to focus on cross country skills, you can move directly into Ski Lesson 3 from Ski Lesson 1.

a. The basic movement of the diagonal stride is the walking step. Forward motion and glide are increased when more effort is applied to the step. The added effort is obtained by a push off coordinated with an increased push from the ski poles.

NOTE: Begin diagonal stride in a flat open area without using ski poles. Tell students to use swinging arm movements for rhythm and timing.

b. Start by leaning forward with a good athletic stance. Then shift weight to the right ski. Next slide the left un-weighted ski straight forward by a springing motion from the ankle, knee and hip, straightening the body and shifting the weight to the left ski.

Complete the motion by straightening the right knee and pushing off from the right foot; this will also complete the weight shift. Keep the weight on the gliding left ski and as the glide nears completion, bend the left knee and ankle in preparation for the next push off. Meanwhile the right ski is moved forward in preparation for the next step. As the right ski comes parallel to the left ski, the next step is made with the right ski by pushing off with the left ski.

c. Using the ski poles can increase the amount of glide. The ski poles are used in the same manner as when marching or walking; that is right ski pole is forward when the left leg is forward and the left ski pole is forward when the right leg is forward. While pushing off with the right foot the left pole is simultaneously planted and the muscles of the arm and shoulder are used to push from the ski pole and propel the skier forward. The right ski pole is used when pushing off with the left foot.

d. The entire motion of the diagonal stride should be a smooth, rhythmic flow of motion. Timing is the key and this is the area that you should focus on.

e. Drills:

(1) Practice without poles first, using the arms for balance and timing.
(2) Practice diagonal poling while gliding on both skis.
(3) Have students count 1,2,3,4, 1,2,3,4 to develop rhythm and timing.
(4) Use different tempos, ride the glide.
(5) Shuffle with a pause. Shuffle with a pop.

f. Common Errors and Remedies:

(1) Shuffling. This indicates uncertainty with balance. More time on skis and drills without poles will help with balance.
(2) Ski tips slide backwards. This indicates poor timing, improper weight shift or improper waxing of skis. Have students count to develop a rhythm. Try to push down on the ball of the foot rather than back. Imagine smashing a bug. Student may need to adjust wax.

Learning Step/Activity 2 – Demonstrate double poling.

a. Start on flat ground with skis parallel. Use both arms in a coordinated effort with an upper body compression to produce propulsion. Ensure that the pole plant is done with the pole grip ahead of the pole basket.

b. Drills:
(1) Double pole with arms only.
(2) Double pole with body compression only.
(3) Double pole with arms and body.

c. Common Errors and Remedies.

(1) Weight is on the backs (heels) of skis. Student is not using the athletic stance.
(2) Double poling with the arms only. Use body compression and arms.

Learning Step/Activity 3 – Demonstrate double pole with kick.

Start out on flat terrain. Review diagonal stride and double poling. Now begin by walking and double poling. Explain that the kick can be timed before, during or after the poling. Move slowly at first until timing and rhythm fall into place, then increase propulsion. Switch kick foot from left to right and back to left, using different sequences. You will get a continuous fluid ‘classic’ cross country movement with this technique.

Enabling Learning Objective D:
Ski Lesson 4: Basic Nordic Downhill and Intermediate Cross Country

ACTION	Demonstrate wedge turns to control speed on gentle to moderate (between 20-30º) snow covered terrain. Combine basic cross country techniques to move efficiently over gentle to moderate snow covered terrain (Double Pole with Kick)
CONDITION	On gentle to moderate snow covered terrain with military skis, bindings, poles and appropriate boots for temperature range (as determined by instructor during daily risk assessment) (or other appropriate ski equipment as prescribed by unit)
STANDARD	Soldier demonstrated linked wedge turns, side slips, and the ability to ride the lift. Soldier demonstrated double pole with a kick and appropriate cross country techniques for the terrain.

Learning Step/Activity 1 – Demonstrate wedge turns.

NOTE: This LSA is performed without ski poles.

a. Turning is one method used to control your rate of descent. To turn simply begin in a gliding wedge and turn in one direction to create a small “C” in the slope.

NOTE: Set a ski pole out about 10 meters down slope from your position. Have students initiate the turn when they reach this pole.

b. Steering is physically turning the ski with your foot. While moving in the gliding wedge, actively steer the opposite ski towards the desired direction. This will become your outside (or downhill ski). If you want to turn to the left, actively steer the right ski. Remember that rotary movement we tried in Ski Lesson 1. While you are moving, this rotary motion will help you steer or point your ski in the desired direction.

While steering this ski, place additional pressure (weight) on the steering ski by flexing at the ankle and bending the knee. This will increase the edge pressure on the outside ski and you will begin to turn (imagine that you are squashing a bug with your outside foot). The inside ski should be kept relatively flat as you make the turn. Turn around the pole, come to a stop, walk uphill and repeat the process on the same side.

NOTE: Transition to the other turn only after students have mastered the first (left or right) turn.

c. Now that you have the basic concept down, we will have you un-weight your skis prior to actively steering. Rise to initiate the turn, then sink or flex to execute the turn. Gradually round the turns out from a small “C” to a large carved “C”. For this portion of training you will start in one direction and as you cross the fall line, you will rise, steer the outside ski and make the turn. Again, stop after making the turn, return to the start point and repeat.

Learning Step/Activity 2 – Link wedge turns.

NOTE: This LSA is initially performed without ski poles. As students master the wedge turn without poles, introduce ski poles.

a. Now that you have figured out how to turn, you are going to link those turns together. After going through the first turn, simply continue moving across the fall line and initiate a turn in the opposite direction and continue this process down the slope.

b. Drills:

(1) Slalom through ski poles.
(2) Keep hands pointed in the direction of travel as if they were headlights.
(3) Point skis, nose, knees and toes in the direction of travel.

c. Common Errors and Remedies:

(1) Cannot turn. Apply pressure to the outside ski (squash the bug) and flatten the inside ski.
(2) Ski tips crossing. The skier is looking at the ski tips. Have the student focus a few feet in front of the ski tips in the direction of travel.
(3) Inside ski runs down the fall line. Flatten the inside ski and increase the edge pressure on the outside ski.
(4) Twisting upper body. Allow the inside hip to move in the direction of travel. Look in the direction of travel and down slope. Actively steer skis with ankles.
(5) Skier is bent at waist and is poorly balanced. Get back into the proper athletic stance. Emphasize the rise and fall with the knees and ankles, not by bending at the back and waist.

Learning Step/Activity 3 – Demonstrate the side slip.

NOTE: Progression to develop a Christy (skid) from a wedge turn requires introduction of a side slipping or skidding at this time. Some students may have accidentally performed a basic Christy during wedge turn practice. When this happens, let it happen. The student is naturally progressing into the wedge Christy.

Begin by standing on a slope with skis across the fall line and poles spread wide. Now roll the knees towards the fall line to release the edges and begin to side slip. Practice both the left and right side slip. As you shift the weight from the balls of the feet to the heels, the direction of side slip will change. If the balance is centered you will slide down the fall line. If it is on the balls of the feet, you will side slip down and slightly forward. If the balance is on the heels you will slip down and slightly backward. Try it while facing across slope. Then rotate the upper body and arms until they are oriented down the fall line and try the same exercise.

Learning Step/Activity 4 – Ride the lift.

a. There are some things to remember when training at a ski area. The lower skier has the right of way - always. Look uphill before exiting a cutoff trail and merging onto a main trail. Always ski in control. If you are out of control, execute a controlled fall.

b. Get into position as directed by lift operator. Remove ski pole leashes and hold ski poles in the outside hand. If you are on the left hold your poles in your left hand; if you are on the right, hold the poles in your right hand.

c. An instructor or lift operator will place the T-bar behind your buttocks. The T-bar should ride just below your buttocks. Continue standing and let the T-bar pull you up the hill. DO NOT SIT DOWN ON THE T-BAR. Use your free hand to hold the center of the T-bar for balance. If you fall, roll to the outside and get away from the main travel path of the lift. Your instructor will let you know (BEFORE starting) where to meet if you fall off the lift.

NOTE: Ensure that students can handle the terrain serviced by the lift before going up. Check trail maps or with the lift operator.

NOTE: Explain the loading and unloading procedures appropriate to the lift you are using. Explain emergency procedures. Then review slope etiquette.

NOTE: Now that all of the bases are covered, let the lift operator know that you have students loading that have never used the lift before. They can slow the lift down and ensure that students get on the lift safely.

NOTE: The instructor for the squad should get on last. This will allow him to ensure all students load safely. It may be a good idea to work in buddy squads. One squad leader can move on the lift in front of the group while the other loads the students and ensures they all get on the lift safely.

Enabling Learning Objective E:
Ski Lesson 5: Basic Nordic Downhill (continued)

ACTION	Demonstrate wedge christy, stem christy and basic telemark turns to control speed on moderate snow covered hills (skis match after the fall line)
CONDITION	On gentle to moderate snow covered terrain with military skis, bindings, poles and appropriate boots for temperature range (as determined by instructor during daily risk assessment) (or other appropriate ski equipment as prescribed by unit)
STANDARD	Soldier demonstrated the wedge christy, stem christy and basic telemark ensuring that skis matched after the fall line.

Learning Step/Activity 1 – Demonstrate the wedge christy (matching skis after the fall line).

NOTE: The wedge christy may be performed with or without poles. If the skier is too dependent upon the poles for balance, take the poles away.

a. By now, you know how to make turns and get down a moderate slope. You also have practiced the side-slipping technique. There are two different ways to start this drill. One starts by traversing a slope and turning into the hill. The other starts with wedge turns down the slope and transitions into the wedge Christy from there.

b. Method 1: Begin by traversing across the slope in a parallel stance. Actively steer the skis uphill to stop. Skis should be parallel with the uphill ski slightly more advanced. As you traverse across the hill the skis should skid (this is also known as Christy). This method gets you a feel for what the end of the wedge and beginning of the next turn should feel like. After you come to a stop, kick turn and try this drill in the opposite direction.

Now begin the drill by traversing across the slope in a wedge. Once you reach the fall line match skis (bring skis to a parallel position, uphill ski slightly advanced), and actively steer them uphill as you did earlier.

You should focus on rising up to steer and initiate the turn and matching and sinking into the skid (Christy) to control the turn.

NOTE: Have students practice until they feel proficient.

NOTE: As the students progress, have them start the turn more and more in the fall line. Students should progress to moving right down the fall line in the wedge, moving from wedge to parallel to turn with Christy. As students become proficient with both turns begin linking wedge Christies; make sure that students are matching skis AFTER the fall line. Turns should be large and “C” shaped at this point.

NOTE: The second method is appropriate for those who have skied before and are frustrated by the slower pace of the first method. Keep in mind that you should still begin this activity on a gentle slope.

c. Method 2: Begin by making some short radius wedge turns in the fall line. Be sure that the ski tips are not too close together. You will need to work on the shape of your wedge turn, focusing on making round turns instead of shallower S-shaped turns. You are also going to need a bit more speed (this is accomplished by a smaller sized wedge or less of a V shape).

Steer the outside foot, knee and ski into the new turn. The speed is necessary because the round turns slow you down (round turns are great for controlling your speed on steeper slopes).

You should be using your edges more. This helps you control your speed and helps you to shape the round turn. Once this is comfortable, think of your inside ski. Now lighten **(DON’T LIFT)** the inside ski as you move across the fall line. It should slide along side your outside ski and you skid (Christy), skis

parallel until you go back into the wedge and start the process all over again. Another way to think of this is to transfer your weight to your outside ski while lightening the inside ski.

NOTE: This whole activity is a drill. It can be done from top of slope to bottom. One common error is leaning into the slope. Direct the student to keep the weight centered over skis. Using the hands as headlights will also help. Another common error is to twist the upper body in an attempt to make the skis turn. This is bad. Again have the student use hand as headlights. Another error is dragging the ski poles or using them as out-riggers for balance. Lose the poles and only add them in after the student is proficient without them.

Learning Step/Activity 2 – Demonstrate the stem christy (matching skis after the fall line).

NOTE: The stem Christy may be performed with or without poles.

a. Though you might think this is just another wedge turn, it is not….it is used when the going gets fast, dicey and when your pack is heavy. In other words it is a technique used by advanced skiers the world over. It produces a quick controlled turn initiation, thus avoiding the abundant speed present in a parallel turn. The stem Christy also provides side to side stability.

b. To begin traverse across a slope. Stand up tall and stem your outside ski out as you would for the wedge. Then step onto this ski, shifting your weight to the stemmed ski. Steer your ski into the fall line. Lighten the inside ski. Sink with your body as you move through the fall line. Your skis will match (or at least they should) as they did in the wedge Christy and you will finish the turn with the same skid as the wedge christy.

If you are having a problem getting the inside ski to come parallel with the outside ski, try lightening the inside ski AND pulling the heel into the downhill or outside ski. As you finish the turn, stand up, stem the other ski out and step onto it for the next stem christy.

NOTE: Have students practice on one side then the other and then link the turns.

c. The main motion now that will be repeated in all other ski lessons is stand up, sink, stand up, sink as you make each turn. This is fundamental to skiing no matter what method of turning you are using. It allows you to weight and un-weight your skis.

d. There are three main points to keep in mind while performing wedge christies or stem christies:

(1) Use plenty of up and down movement; start tall and sink through the turn.
(2) Shift your weight onto the stemmed (or wedged) ski.
(3) Lighten the inside ski as your skis come through the fall line.

e. Drills:

(1) Garlands- Have the students link a series of turns for a short distance one after another trying to stay in the same groove. Reinforces steering of the skis.

(2) Human slalom- Students line up in the instructional formation. The first student skis down a short distance, turns and stops. The second skis down, turns around the first and stops, third student skis down, turns around the first, then the second, then stops. The following students repeat using each other as turning poles. Reinforces the need to steer the skis.

Learning Step/Activity 3 – Demonstrate the basic telemark (also known as telemark christy, matching skis after the fall line).

NOTE: The telemark christy may be performed with or without poles.

a. Now we can finally free our minds because we will free our oppressed heels that have been kept on the ski up until now (other than your 1,000 telemarks drill, when you have taken a fall and let your skis flop around, or when your evil instructor made you cross country or move uphill).

b. We need to review the telemark stance. On a flat spot, sink into the tele position, one foot forward and one foot back. Your weight should be evenly distributed between both feet. Try a very low stance, then try a taller stance. Find what is most comfortable for you. You should feel your weight on all of your front foot and the ball of your rear foot.

Now try it while traversing across a shallow slope. Drop the uphill ski back and get into a comfortable telemark position. You will turn up hill which will bring you to a stop. Kick turn and try it the other way.

If you have the diagonal stride down, you have the stance down. The stride motion is the same as the telemark position with one exception. Your arms stay to the front in the telemark position, they are stationary and relaxed in front of you (the same position you have kept while performing any of the downhill techniques in past lessons).

c. Basic telemark from a half wedge. Begin with a straight run on a shallow slope. Point one ski straight and point the other ski out as if it were in a wedge. Keep a minimum amount of weight on the wedged ski; you should feel the inside edge brush lightly against the snow.

d. Now weight the wedged ski to initiate a turn. At the same time sink into a telemark stance. Think of sliding the wedged (outside ski) ski forward and the inside ski backwards. Steer the outside ski through the turn. You will turn uphill to a stop. Point your skis downhill again, move in a half wedge and try the turn in the opposite direction.

e. Once you are comfortable with a single turn, practice executing the turn over and over with a drill known as garlands. To execute the garland drill, traverse across a slope in the half wedge. As you move across the fall line execute a turn. As you come to a stop, point the skis down the fall line again and execute another half-wedge to telemark turn. You will be doing the same turn (left or right), until you have reached the bottom of the hill or come to the edge of the ski run. If this is the case try it the other way and again stay with the same turn until you reach the bottom or other side of the ski run.

f. Now you will try to link these turns. The key for now is to start in the half wedge and initiate the turn and sink into the telemark position before the fall line. You should traverse across the fall line in the telemark position, then move back to the half wedge position to initiate the next turn, and again sink into the telemark before the fall line.

Enabling Learning Objective F:
Ski Lesson 6: Intermediate Nordic Downhill and Advanced Cross Country

ACTION	Demonstrate wedge christy and basic telemark turns to control speed on moderate snow covered hills (with pole plant and skis match before the fall line). Demonstrate basic skating techniques.
CONDITION	On gentle to moderate snow covered terrain with military skis, bindings, poles and appropriate boots for temperature range (as determined by instructor during daily risk assessment) (or other appropriate ski equipment as prescribed by unit)
STANDARD	Soldier demonstrated the wedge Christy and basic telemark turn (with pole plant and matching skis before the fall line. Soldier demonstrated basic skating techniques.

Learning Step/Activity 1 – Demonstrate the wedge christy (matching skis before the fall line).

a. Now that you are comfortable matching your skis after the fall line, you will transition to matching your skis before the fall line. There really is not much to it other than practice. There are some things to consider. Flexion and extension are what allow you to work your skis. You have seen this throughout all of the ski drills you have done up to now. Rise and fall. Tall and small. Try turning without the rise and fall. Now try it with this motion. "Flexion and extension allow you to control and use the pressures that gravity and centrifugal force create against your edges. They are the key to more carve and less skid (christy)" from Free Heel Skiing by Paul Parker. Flexion and extension keep you from becoming stuck in a position as you move down the hill."

b. At this point the poles will become more important. The idea is to keep the hand and poles in the same forward position as before. But now you will begin to sting the snow with a pole plant to initiate the new turn. This pole position and the pole plant helps keep the body oriented down the fall line. This 'quiet' upper body becomes very important as you begin to transition to turns in the fall line. Turning the upper body with the turn is a sure way to fall.

c. Work on short radius turns and on long sweeping turns. Turning before the fall line means you maintain or increase your speed. Turning in or after the fall line means you will slow down. You now know and have the techniques for moderating your speed as you move down a slope.

Learning Step/Activity 2 – Demonstrate the telemark christy (matching skis before the fall line).

Everything that applied for the wedge christy applies here as well; just try it from half wedge to telemark christy and match the skis in the telemark position before the fall line. Pole plants, flexion and extension and a quiet upper body are all just as important.

Learning Step/Activity 3 – Choose techniques for the terrain.

On a backcountry movement, conditions will change constantly. Different conditions call for different techniques. You are starting to develop a repertoire for these different conditions. Getting good at a single technique will not serve you well when the conditions are not suited to that technique. Wedge turns, side-slipping, braking wedge, wedge christies, stem christies, telemark christies, kick turns may all be used on a particular movement.

NOTE: Get the students into different conditions. Powder, breakable crust, wind slab, hard pack, and bumps. As you get them into each situation, have them try different techniques. Let them get used to the feeling of each, the body position that works well for them and the technique that allows them to turn their skis best. Explain the fore-aft stability of a telemark position and how it is appropriate for powder and breakable crust that is working to throw them forward or backward. Explain the importance of the wedge position and the side to side stability that it affords. Side-slipping is skiing and will work for steep icy conditions or narrow terrain. Work them in difficult situations; watch their technique to ensure they do not develop bad habits. Some call this mileage and it is what will develop better skiers. After a few hours of practice in different conditions, get them back to the groomed and the students should notice a marked improvement in their skiing ability.

Learning Step/Activity 4 – Demonstrate basic skating techniques.

a. On flat terrain, or to gain speed on a gradual downhill, or to move up a very gradual flat uphill section, the skating technique can be the best method.

b. Start on a very gradual downhill section. Start moving in the herringbone. As you step from one ski to the other give a little push to glide on the new ski. You should be able to use the same duck-footed position but push a little harder from one ski to another and let each ski glide before the next push. As you push off one ski, try to put the gliding ski down on its outside edge. Transfer all your weight to the gliding ski. As you gain some confidence move to a flat section of trail. Here you actually can get onto the outside edge of the gliding ski. The weight shifts from the pushing ski to the outside edge of the gliding ski. You then roll this ski over to the inside edge for the next push. Repeat this process and you are skating.

c. You can use your poles to help skate. Push off with your poles at the same time you push off with a foot. This is known as V2. In actual cross-country skate skiing there is a slightly different motion, but that is not important here as you do not have the long poles used for this technique.

Enabling Learning Objective G:
Ski Lesson 7: Advanced Nordic Downhill

ACTION	Demonstrate open stance parallel and open stance telemark turns on moderate to steep (between 30 and 35º) snow covered terrain
CONDITION	On gentle to moderate snow covered terrain with military skis, bindings, poles and appropriate boots for temperature range (as determined by instructor during daily risk assessment) (or other appropriate ski equipment as prescribed by unit)
STANDARD	Soldier demonstrated open stance parallel and open stance telemark turns.

Learning Step/Activity 1 – Demonstrate open stance parallel turns.

NOTE: Most students begin to perform the open stance parallel as they practice the wedge christy. This is the natural progression and when you see it encourage it.

a. There are two important areas that you need to focus on as we advance in skiing technique. The knees and the ankles. Try for a moment to ski with the knees bent but the ankles straight. You will immediately notice that you are off balance. You bend forward at the waist to compensate for this lack of balance and are then thrown backward as you over-compensate. Your knees act as shock absorbers, but without flexed ankles, bent knees do nothing for you.

To start, make some medium radius, skidded parallel turns. Point the skis down the fall line and gain some momentum in the athletic stance. Extend your legs by extending your ankles and begin the turn (the tall position). You are going to get the most out of your weight on the downhill run. Steer the skis into the turn. The main difference is that you are not in a wedge position at any point in the ski. If it sneaks in to control your speed that is fine, but we need to move away from it.

Pole plants down the fall line initiate the next turn. The pole plants help with timing. They should not be used as a staff to lean on and provide balance.

NOTE: If students are having a hard time with poles, practice without the poles until they have the turns down.

b. At this point most of your turns will feel skidded and choppy. You have all seen the skiers that look smooth, not matter what the conditions. To get you there we will try some edge control. Traverse across a slope and get a bit of speed. Extend the ankles and tip the uphill ski onto the uphill edge. At the same time transfer your weight to this uphill ski. With this accomplished roll the uphill ski onto the downhill edge. This will initiate a turn and pull you into the fall line as you smoothly change edges and steer into the fall line. Sink through the turn. With the turn complete try the same drill on the other side. This drill should help you to make smooth edge changes and move you toward carving your turns as opposed to skidding your turns.

c. Here are some tips to producing a smoother parallel turn. Do these things and you will be as smooth as any alpine skier.

d. Focus on the inside ski. Most parallel drills focus on the outside ski. Because the outside ski is weighted more than the inside ski, people tend to ignore it. But if you put some focus on it and play with pressure and edging of the inside ski you will transform your turns into smooth, carved turns.

e. Focus on the inside knee. Your inside ski must be steered just as you do with the outside ski. Too much focus on the outside ski can lead to crossed ski tips as the inside ski gets away from you. To remedy this, point your inside knee in the direction of the turn. Moving into the turn with this pointy knee will get the inside ski tip moving in the right direction. As the terrain gets stepper, leading with the inside knee will help make your turns quick and get your body aligned for the turn. It will also get the inside ski out of the way early and allow the outside ski to do the right thing without crossing over your inside ski.

f. Edge your inside ski. Skis that are edged equally are more likely to stay parallel. This is especially true in loose snow, where your skis will want to move in different directions. On hard pack snow, failure to edge skis equally will result in crossed skis. Try to tip both skis over onto their edges at the same time. Make a series of turns and consciously focus on edging the inside. In powder conditions, edging means tipping the ski onto its edge rather than trying to have it bite into the snow.

g. Slide the inside ski forward. Sliding this inside foot forward as you finish your turn allows you to get a better edge with both skis. It allows your body to remain facing down the fall line. As your skis come out of the fall line, let that inside ski slide forward before you shift your weight.

h. Weight the inside ski. On hard pack the downhill ski gets most of the weight. But in powder the weight is more evenly distributed between the skis. Try weighting the inside ski on the whole little toe side. Having the ability to do this will allow you to change your weight distribution to match the conditions you are skiing in.

Learning Step/Activity 2 – Demonstrate open stance telemark turns.

NOTE: Most students begin to perform the open stance telemark as they practice the telemark christy. This is the natural progression and when you see it encourage it.

a. Now we are getting to the true telemark turns. While practicing the telemark motion you probably felt yourself transitioning from sequential steppy turns to more fluid telemark movement. The main difference between the telemark christy and the open stance telemark is that the turn initiation begins with the skis in a parallel position rather than from a wedge position. The turn becomes carved instead of skidded.

b. Here are some additional tips to focus on as you transition to the open stance telemark. These tips are taken directly from the free heel skiing guide:

c. Tuck your back leg under you. Think of bringing your rear knee cap into the bend on the front knee. The back leg is the often neglected leg in the telemark turn. Many students new to the telemark turn make the common error of letting their back leg flop about behind them with little weight placed upon the ski. But because you should have your weight distributed equally between the two legs it is just as important as the front leg. Your rear heel should be raised off the rear ski and directly underneath your buttocks.

d. Think of knees as headlights. Point your front knee or headlight beam towards your new destination. Once you have this concept down, focus on the back knee and try to point its beam into the new turn.

e. Big toe, little toe. When you edge your skis into a turn, you should feel the pressure under the big toe side of the front ski and the little toe side of the rear ski. This will edge your skis properly. Note that with this tip, it is not just the toe of the foot but the whole side of that foot that has pressure on it. But thinking big toe, little toe should stick in your mind. This concept will also help prevent you from tip toeing on the rear ski. Your entire rear forefoot should remain on the ski.

f. Dropping your rear heel. This tip puts a number of things together. You have learned to put half your weight on the rear ski. You have learned to use the big toe, little toe concept to get the skis to edge properly and to give you more control of the turn. Now try to relax and bend your rear ankle even more so that the heel drops closer to the ski. Stay on edge but try to get as much of the rear foot on the ski as possible. This tip gives even more control over that rear ski. Your hips will naturally tuck underneath your body to relieve the tension in your calf and Achilles tendon created by this dramatic flexion in the ankle.

g. Do more with the hips. A good telemark skier has the same ‘quiet upper body’ that a parallel skier has; that is the upper body moves and faces down the fall line. A telemark skier’s hips rotate with the turn rather than face down the hill as with a parallel skier. With the upper body pointed down hill, you essentially have a spring and when the edges are released for the next turn, the abdomen, back muscles and hips rotate the skis around into the new turn. You should actually feel the abdomen

muscles working for you. You will feel the new front hip punching around and into the new turn. Concentrating on this front hip helps you to anticipate the next turn.

h. Skiing from the waist up. You have learned to focus out in front of you, rather than on your ski tips. You have learned to keep your hands (poles) out in front of you, facing down the fall line. You have learned to keep your torso facing down the fall line. Pole plants become more important to help with timing. Think tap and turn. Tap the slope in front of you and turn around the pole. This is true of parallel and telemark turns.

Glossary of Ski Terms

Angulation- moving in a diagonal or lateral plane in a flexing or extending manner. The bending movements occurring in the feet, knees, waist, and spine, which are used to adjust/ control the angle of the ski (edge) on the snow surface.

Anticipation- movement in preparation for weight transfer (shift) from one ski to the next or in preparation for turning, during which the upper and lower body are brought into a twisted relationship.

Balance- the action of maintaining equilibrium. "Static Balance" is maintaining balance while stationary, and "Dynamic Balance" is maintaining balance in motion.

Camber- the bow shape of the ski, which distributes the skier's weight over the entire running surface of the ski.

Carving- turning the ski over the snow where the tail of the ski follows the path created by the tips.

Center of Mass (CM)- the point of the body where the skier's weight is most centered.

Christy- a turn where both skis skid on corresponding edges at some point during the turn.

Control Phase- the point in the turn where the skis are guided through the intended arc.

Countered Stance- a stance where the legs and torso are twisted in opposite directions (counter rotation). A slight counter is used at lower level maneuvers. Counter increases at higher levels.

Diagonal Stride- most commonly used maneuver to negotiating flat terrain. Cross country skiing.

Double Poling- maneuver where the ski poles are the only source of propulsion. Both poles are used simultaneously, with a distinct forward lean.

Double Pole w/ Kick- similar to double poling, except that a single kick is used to aid in propulsion.

Edge Angle- the degree of tilt of the ski along its long axis in relation to the surface. Degree of edge adjustment is primarily determined by how far the ski is away from the hips (CM). Fine tuning adjustments are made at the ankles and knees.

Edge Change- adjusting the edge angle from one edge of the ski to the other.

Edge Control Movements- movement of the hips, knees and ankles to adjust the edge angle to the maneuver being performed.

Extension- straitening of the leg muscles, resulting in a taller stance. Extension/ flexion movements are used to control pressure on skis.

Fall Line- imaginary line running down the slope in relation to the skier. The path a ball would take if it rolled down the slope.

Flexion- shortening of the leg muscles, resulting in a shorter stance.

Flow- movement that is continuous and uninterrupted.

Garland- series of turns across the hill that *do not* result in direction changes across the fall line.

Glide- forward motion of one or both skis over the snow.

Grip- traction gained by use of wax.

Guide- to direct motion by physical action.

Herringbone- a hill climbing maneuver where the skis are in a V. The herringbone is executed using the inside edges of both skis.

Initiation Phase- the phase of the turn during which a change from edge to edge allows the skis to be turned or a direction change to start.

Kick- applying force down or stepping on, the ski that sets the wax into the snow, providing momentary traction.

Matching- steering the skis from a wedge or *stemmed* position to a parallel position.

Pivot- the point on the ski around which the ski rotates. This point can be adjusted through shifts in pressure fore and aft on the ski.

Poling- using the ski pole for propulsion.

Pole Plant (touch)- use of the pole as a timing and terrain sensing device when skiing downhill. A pole plant most often begins the initiation phase of a turn and corresponds with edge change. <u>This is done by touching the pole to the snow, not by sticking the pole into the snow.</u>

Preparation Phase- the point in the turn, which the skier prepares for, the next turn; also referred to as the finishing point.

Pressure Control Movements- actively adjusting the pressure between the ski and snow usually performed by Flexion/ Extension.

Rotary Movements- rotation, or a tendency toward rotation, of either the body as a whole or of one part of the body relative to another.

Sidestepping- uphill movement with skis perpendicular to the fall line. Lifting the uphill ski directly uphill, then bringing the downhill ski up to match it accomplishes movement.

Sideslipping- lateral slipping of the skis straight down the fall line.

Skidding- skis move forward and sideways simultaneously, while pivoting occurs.

Sliding- gliding in the same direction the skis are pointed.

Slipping- releasing the ski edge (flattening) results in slipping. The skier is moving in a direction other than where the skis are pointed.

Steering- turning the feet to guide the skis in the desired direction.

Traverse- the line that crosses a slope by crossing the fall line.

Wedge- a fundamental position for the skis to introduce speed control while skiing downhill. The skis are steered into a V position where the tips are close to each other, the tails are displaced further apart.

Weight Transfer- shift in body weight from one foot to the other

SECTION IV. SUMMARY

Check on Learning.

1. What is side cut?
The difference in width between the tip, waist and tail of the ski.

2. What is a braking wedge?
A braking wedge is essentially a gliding wedge with the inside edges dug into the snow more to slow and ultimately stop a skier.

SECTION II. INTRODUCTION

Motivator: (Slide 1) Avalanches surprise more people in the winter than any other hazard. Many of these surprises end in casualties. In addition to casualties, the military significance of an avalanche can be lost/damaged equipment or blocked mobility corridors that require the commitment of resources to clear. Avalanches have had a significant effect on military operations in snow covered terrain. The Salang pass in Afghanistan is a main link between Kabul and northern provinces. In winter it is the only link with the north as other routes are closed by heavy snows. Located at an altitude of over 11,000 feet, the Salang pass has been closed in winter as the result of avalanches, creating significant logistical difficulties for ongoing military operations. On the Austria-Italian front in World War I, over 60,000 soldiers were killed by avalanches.

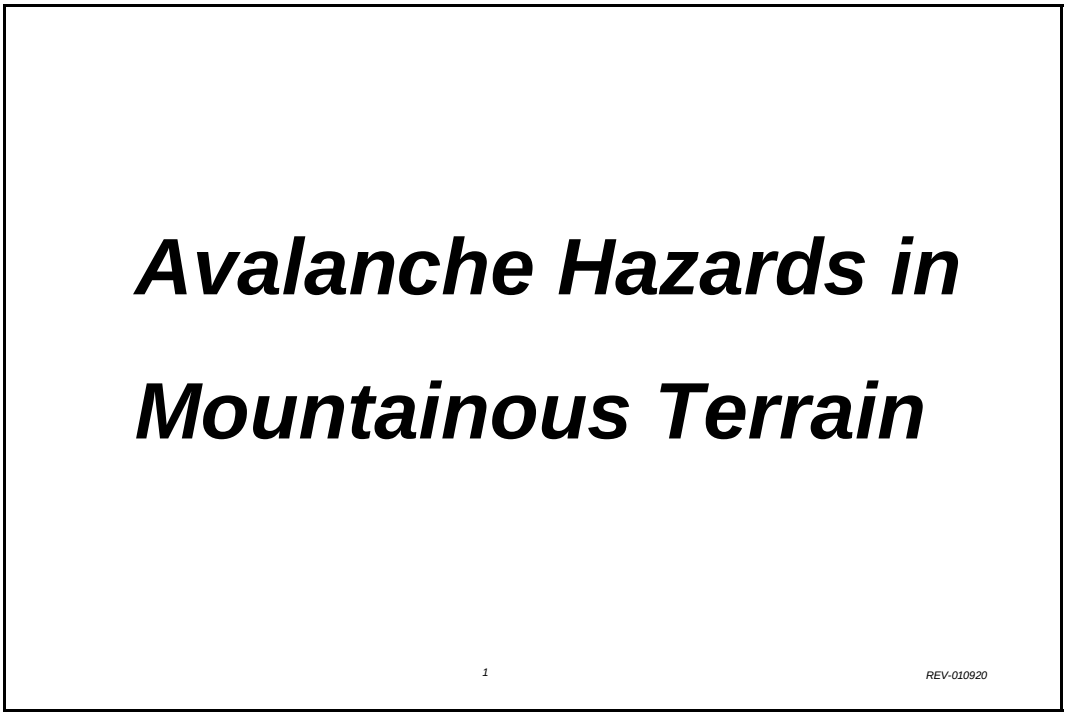

Terminal Learning Objective

ACTION	Move safely in avalanche terrain.
CONDITION	Under field conditions in avalanche terrain, given beacons, probes, shovels, inclinometer, military snowshoe, bindings, ski poles, survival rucksack (packed IAW training schedule), vapor barrier boots, rucksack (with a minimum load of sleeping bag, sleeping pad, extra pair of socks, extra pair of mitten inserts, additional packing list items may be prescribed by unit), ECWCS, other issued cold weather clothing items, ballistic helmet, LCE with 2 quarts of water, and weapon
STANDARD	Evaluate the avalanche potential in different areas. Choose safe routes in terrain with avalanche potential. Use special equipment to recover personnel and equipment from a mock avalanche scenario.

Safety Requirements: Instructors that teach and lead this lesson will have attended a Level 1 avalanche course. These same instructors will evaluate the terrain for the practical exercise to ensure that avalanche danger is low and take steps to mitigate any existing avalanche danger by a thorough terrain, weather, and snow pack analysis.

Risk Assessment: Low for classroom training. For field training, risk level will be determined by the squad instructor based upon the current conditions.

Environmental Considerations: None

Evaluation: You will be tested on your knowledge of avalanche hazards during a one hour written examination at the conclusion of the course (Refer to training schedule for date/time of exam). You must score a 70% on the written exam. If you fail the written exam, you will be given a second exam after re-training has been conducted. If you fail this second examination, you will be dismissed from the course. In addition you will participate in two practical exercises. You are expected to evaluate the potential for avalanche in a particular area using knowledge presented in classroom and field instruction. You are also expected to use special equipment to locate personnel and equipment buried in a mock avalanche accident.

Instructional Lead-In: (Slide 3) You may be expected to plan and or conduct a movement in terrain with avalanche potential. Or you may decide to venture into the backcountry of Alaska on snow machine, skis or snowshoes to hunt, trap or just enjoy one of the most beautiful places in the country. But do you know the risks? Which route would you take to get through the saddle in this photo? Avalanches can and have killed people in areas that you probably would never think twice about going into. With the knowledge gained in this lesson and some common sense, you should be able to mitigate the risk to reduce or eliminate the chances that you or your unit becomes caught in an avalanche.

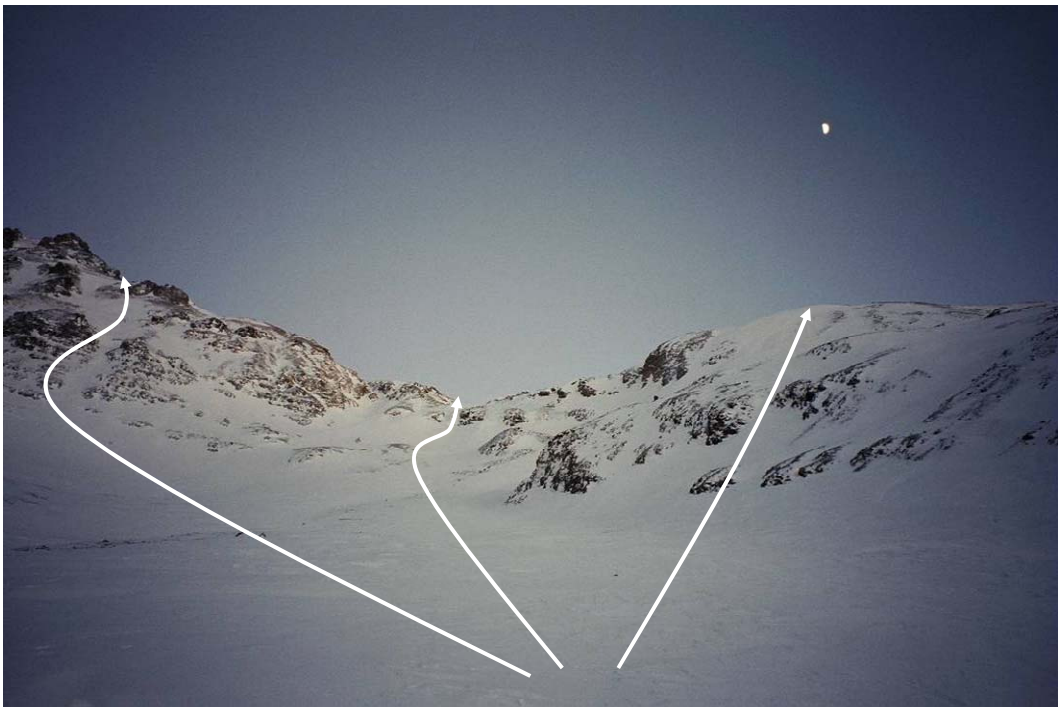

SECTION III. PRESENTATION

Learning step/ Activity 1- Define avalanches.

a. (Slide 4) An avalanche is a mass of snow sliding down a mountainside. Avalanches are also called snow slides.

What is an avalanche?

Definition: An avalanche is a mass of snow sliding down a mountainside. Avalanches are also called snow slides; there is no difference in these terms.

Learning Step/Activity 2 – Describe the two type of avalanches.

a. (Slide 5) There are two main types of avalanches – loose snow or point release avalanches and slab avalanches.

Types of Avalanches

1. Loose snow avalanche or point release avalanche

2. Slab avalanche

b. (Slide 6) The **loose snow slide or point release** usually occurs on steeper slopes from 35° and up. Loose snow slides start small, at a point, and grow in width as descent occurs, picking up more snow as it goes; typically this involves only the very top layer of fresh snowfall. These types of avalanches typically do not carry much snow but can trigger slab avalanches. In late spring, however, these types of slides can carry become very significant as they become wet snow slides carrying large amounts of heavy wet snow that can be quite destructive. They can also be the trigger for a large slab to break.

Point Release Avalanche

ALTHOUGH USUALLY SMALL,THEY CAN TRIGGER A SLAB TO RELEASE

c. (Slide 7) **Slab avalanches** contain a more cohesive mass of snow. The formation of a slab can occur at any depth in the snow pack. A typical winter snow pack could contain many separate slabs varying from an inch to ten feet or more in thickness. Each new snowfall eventually forms a definable layer in the snow pack. The bonding of these adjacent layers determines the overall strength of the snow pack. Not all layers in a snow pack evolve into slabs. Many detailed events occur over time that affects the bonding process of the snow crystals within the snowpack. The lack of a strong bond between layers increases the probability of avalanche. In addition to the strength of the various layers, other factors affect avalanche probability.

d. The crown is the “starting zone”. This is where the fracture occurred. The track is the path the slide took. The run out is where the slide stopped.

Slab Avalanche

Learning Step/Activity 3 – Describe the effects of avalanches.

a. (Slide 8) One of the most obvious results of an avalanche is the burial of people. As this chart shows, as burial depth increases, the probability of survival decreases. Being buried is not necessarily the cause of death. Trauma from impact with objects and asphyxiation are the leading causes of fatalities. Asphyxiation happens as a result of the victims warm exhalations melting a fine layer of snow around the nose and mouth. This creates an ice mask which prohibits fresh air from reaching the victim.

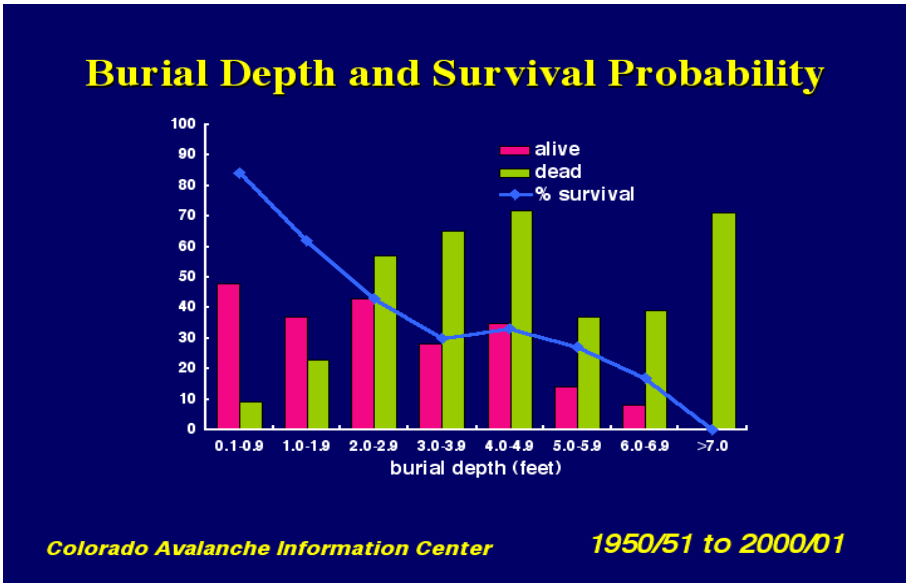

b. (Slide 9) The probability of surviving a burial diminishes with each passing moment. The chance of survival drops to half after 15 minutes. As you can see from this chart, companion rescue is most effective. If you witness an avalanche that buries people, ***you*** are the best chance of getting those persons out alive. If you go for the help of an organized rescue, the chances are that you are going to get help for a body recovery.

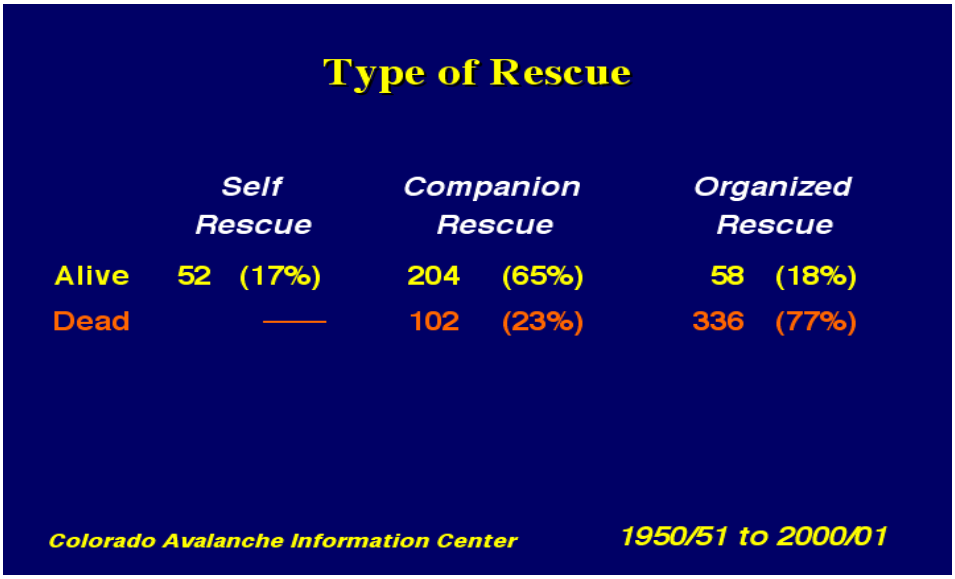

c. (Slide 10) Many tons of debris moved down this slope. As a slide moves downhill, it may reach speeds of 80 miles an hour given the right conditions. In addition to the snow blocks, the surrounding terrain features also become hazards. The victim may impact trees and rocks as well as debris being carried within the snow. When the snow comes to a halt it sets up very hard, almost like concrete. As the snow moves downhill friction and heat are generated. This action causes the snow to become a semi liquid. After stopping the cold temperature of the air and snow causes it to refreeze immediately.

Avalanche Debris

d. (Slide 11) Even though this slope had adequate anchors, the snow-pack above the tree-line slid and the weight and force of the moving snow removed all vegetation from the slope.

Avalanche Debris

Learning Step/Activity 4 – Recognize the four elements that contribute to avalanches.

a. (Slide 12) There are four elements to consider – **Terrain, Snow pack, Weather and People.** Without people there is no hazard. This is the famous data triangle created by Doug Fesler and Jill Fredston two avalanche specialists who reside in Alaska.

Recognizing the Hazard

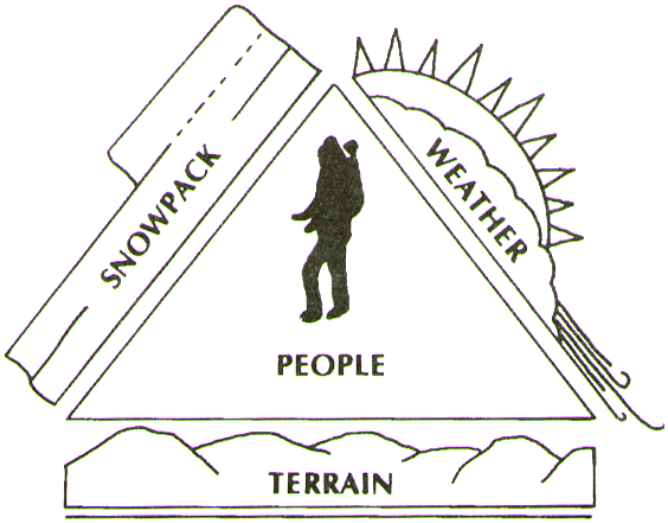

Learning Step/Activity 5 – Evaluate how terrain relates to the avalanche hazard.

a. (Slide 13) The first thing we will consider is the terrain itself. Is it capable of producing a slide? What angle slopes will slide? How do I determine what this slope angle is? What other terrain characteristics contribute to slope instability? These are the first questions you need to ask.

b. When we look at terrain we look at the **slope angle, slope shape, the terrain characteristics and feature(s) you are dealing with, and anchors (trees, boulders, scree etc.).** If you become competent at evaluating terrain you can manage it to your advantage as you move over it and keep yourself out of harms way in most cases.

Terrain

- ***Can it slide? Is it capable of producing avalanches?***
- ***How do I measure the Slope Angle?***
- ***Terrain characteristics***

c. (Slide 14) **Slope Angle:** Typically, as the slope angle increases, the probability of an avalanche increases. Based on statistics, without an angle greater than 20°, the gravitational force on the snow pack is typically not great enough to produce a slide. While avalanches usually occur on slope angles between 20° and 60°, a majority of avalanches occur between 30° and 45° and a disproportionately large number occur between 35° and 40°. The “sweet spot” seems to be 38 degrees. Although slope angles above 55° predominately produce loose snow slides, slab avalanches can occur. Snow falling on the steeper slopes tends to “sluff” off upon falling.

d. The reason we measure slope angle is to determine if the snow can move. A lot of terrain can be eliminated as a hazard area just by measuring the angle. Bear in mind that just because the angle is prime to move does not mean it will slide. There are other parts of the triangle to consider.

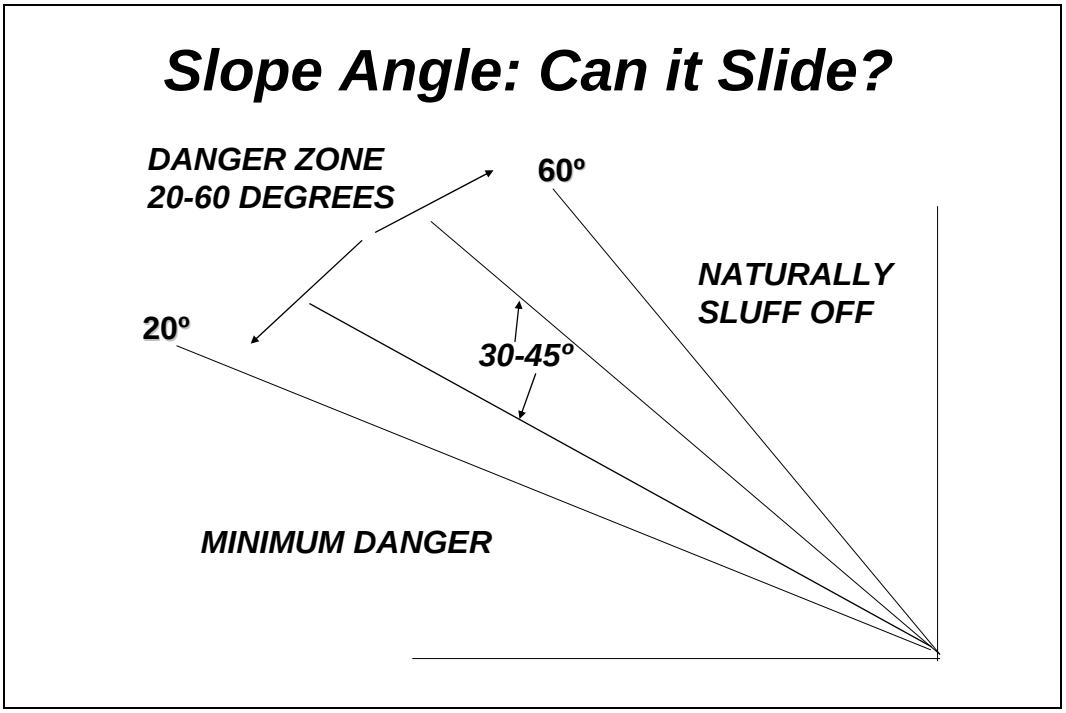

e. (Slide 15) **Inclinometers** There are several methods used to measure slope angle. Some compasses have an inclinometer built in, and there are several stand alone inclinometers manufactured. These devices all cost money and this prohibits their mass issue. The issued Army Protractor, GTA 5-2-12, 1981, can be modified to read slope angle easily.

(1) Hold the card so the text can be read.

(2) Punch a hole in the exact center of the device and thread a tiny string through and tie a securing knot on the backside of the card.

(3) Extend the string far beyond the farthest corner of the card; add 2 - 3 inches and cut the string.

(4) Tie a weight, such as a small washer or nut, to the fresh cut end.

How do I measure the slope angle?

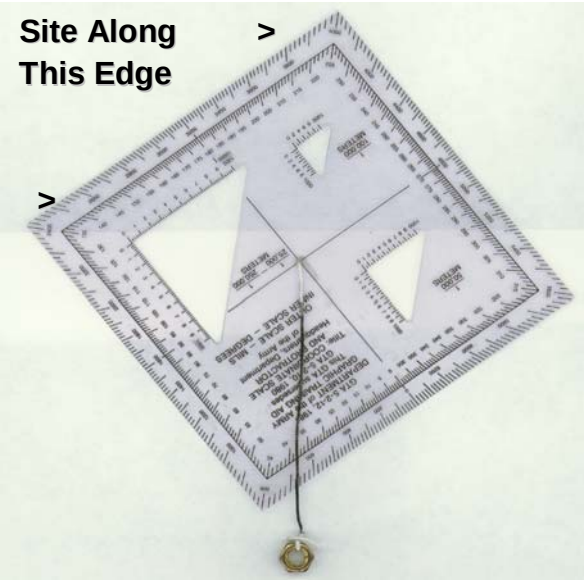

f. (Slide 16) **Measuring Slope Angle:**

(1) Hold the card vertically so the data is legible and rotate until the weighted string hangs on the zero mark. The corners containing the 2400 and 4000 mil marks define the sighting edge of the device, with the eye point being the 2400 mil corner. Hold the card vertically, aligning the sighting edge with a slope and allowing the string to hang freely against the card. When the string is stable, pinch it on the outside edge of and against the card between the thumb and a finger. Move the card from the sighting position and read the indicated angle.

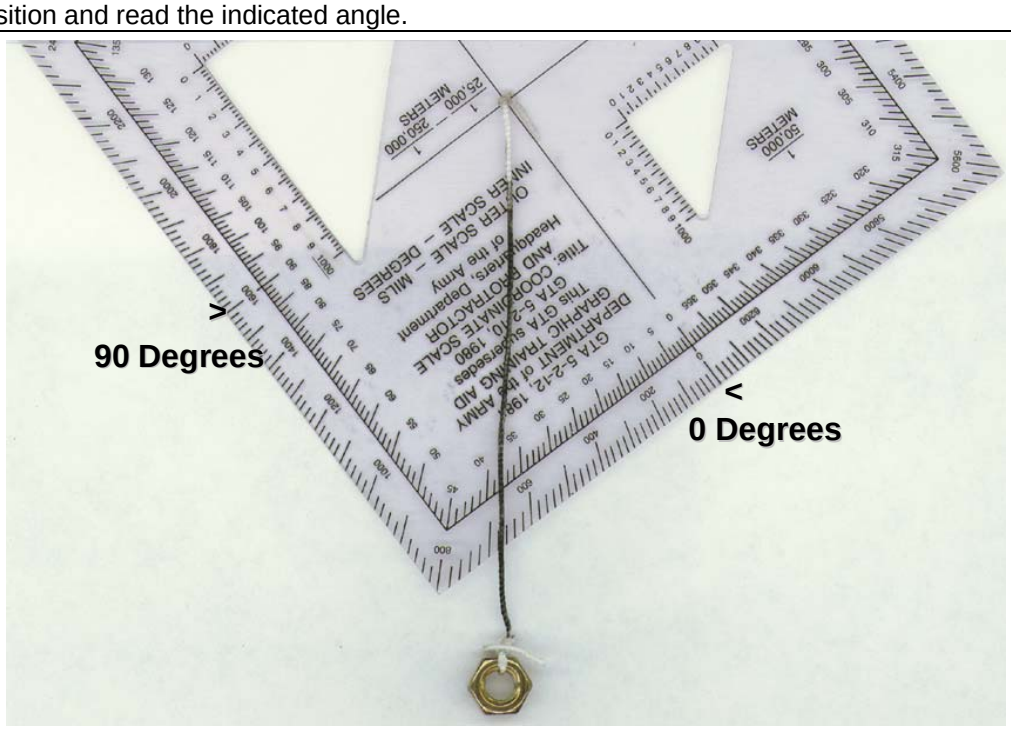

(2) (Slide 17) Dig into the snowpack deep enough to align the site edge with the slope. Orient the card to the slope as in the photo and ensure the card faces are vertical as in the photo. As the string is hanging steady, pinch the string and the outer edge of the card between the thumb and a finger. Turn card so you can read the indicated angle. If slope angle varies, use the steepest angle for your assessment.

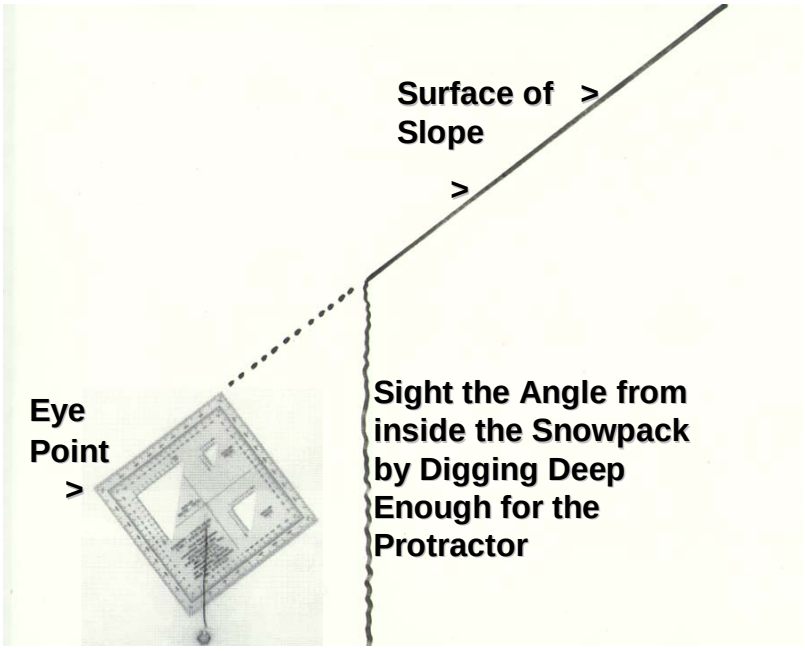

g. (Slide 18) **Slope Shape:**

(1) In broad general terms, a concave slope is safer than a convex slope. This generality is true on smaller slopes as compression forces at the bottom of the concave slope help prevent the snow from sliding. The reason is that a concave slope is under compression, meaning it is being pushed together. On larger slopes this advantage disappears.

(2) The majority of avalanche accidents occur on convex slopes. The convex slope is under tension, meaning it is being pulled apart. This is quite evident on “rollers” or small hills. The military crest is the most likely point of fracture.

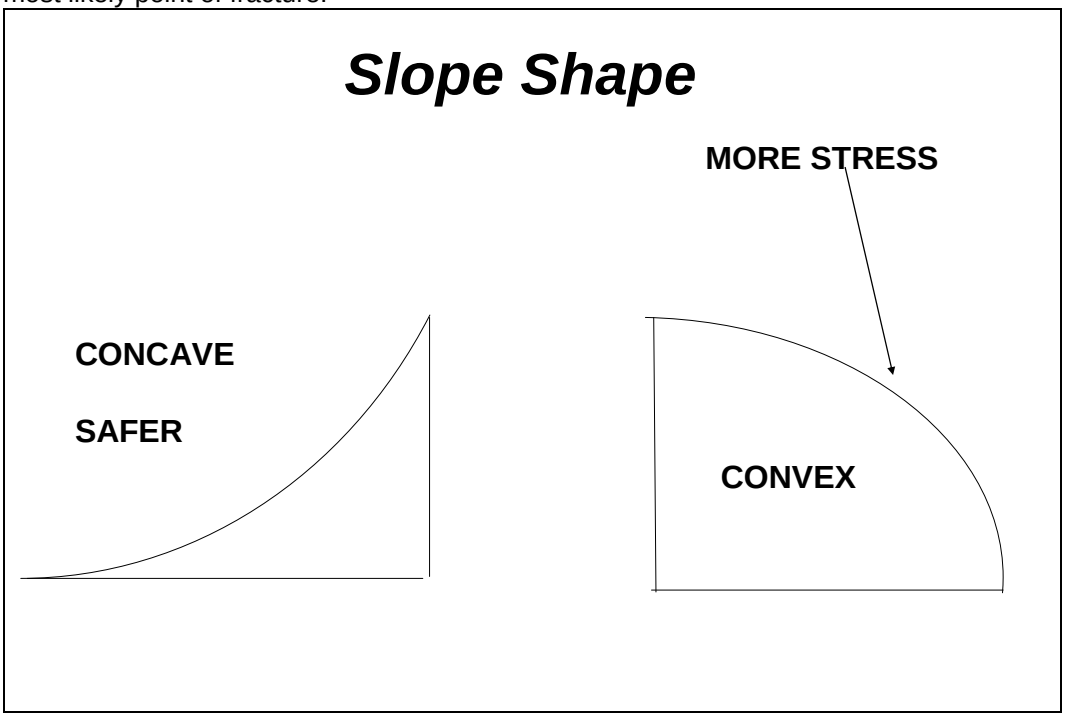

h. (Slide 19) **Anchors** will hold snow under most conditions. Grass and smooth rock will not hold snow for very long. Talus, and downed trees will hold the very bottom layers until the snow depth covers the top of the rocks or trees. Standing trees will hold surrounding snow, but a slide can still occur especially if the trees are widely spaced.

Anchors

- ***Grassy slopes or smooth rock make for an unstable slope***
- ***Jumbled rock, deadfall will anchor bottom layers***
- ***Trees will anchor surrounding snow, but***
- ***beware of snow above tree line coming down***

i. (Slide 20) **Terrain traps** are areas that offer no escape should an avalanche occur; snow is naturally funneled into these areas. Gullies, couloirs, creek beds and canyons are places that people tend to go because the traveling is easier but an avalanche from above can fill these areas. A cliff below a line of travel also presents the problem of going over the edge if swept away.

Terrain Traps

Gullies,couloirs,creek beds,canyons

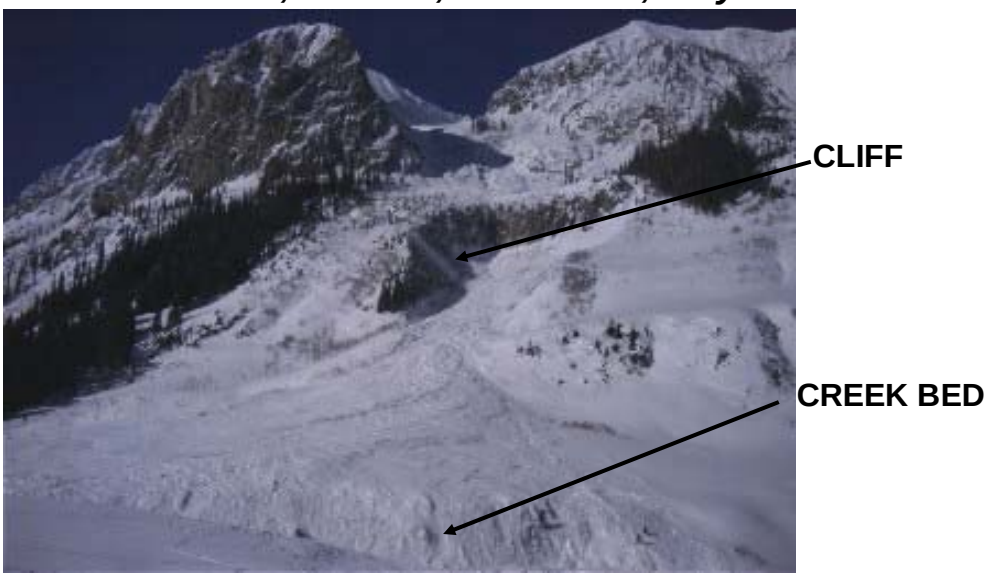

j. (Slide 21) The avalanche above this canyon filled in the low ground. Be aware of the hazard above.

Terrain Traps

Learning Step/Activity 6 – Evaluate how the snow pack relates to the avalanche hazard.

a. (Slide 22) Once we have determined that the terrain can produce an avalanche (i.e. the slope angle is sufficient, there are few if any anchors, the slope is convex or too large to matter, etc.), we must look at the snow pack to determine if it is stable or unstable. An evaluation of snow pack can become very scientific and for avalanche forecasters it does. For us a basic knowledge of the snow pack ingredients required for a slide to occur are necessary. But before we look at these ingredients lets look at why a slab slides.

b. The failure of the elastic energy in a slab of snow is the basis of an avalanche. Elastic strength is defined as the strength within a slab cross section. An example of elastic strength is the strength necessary to tear a pan cake apart with two hands. With enough force, the slab will separate from itself, with one side remaining on the slope while the other slides downward. In the example with the pancake, the outside force was the strength of the hands. In the snow pack, the outside force could be a skier, other travelers, cornice breaks, or other natural occurrences putting stress on the snow pack. In simple terms, the proverbial “straw that broke the camels back” is all that’s needed to start an avalanche. An outside force is anything that comes in contact with the snow pack. An avalanche could be triggered from the valley floor away from the slope. The slab structure will sometimes encompass all of a valley floor and a surrounding slope.

c. There are three ingredients that combine to form an unstable snow pack and the potential for a slab avalanche. Of course they must be in a particular configuration and this slide depicts an unstable snow pack that could slide. The ingredients are:

(1) Slab: One or more layers of generally cohesive strongly bonded snow.

(2) Weak Layer: This is a layer of poorly bonded snow. It will often be loose and granular and it is often called sugar snow, because it has the same consistency of loose, dry sugar.

(3) Bed Surface: This is another layer of consolidated snow, ice or the surface of the ground.

d. There are many layering combinations; the three layers mentioned are only one possibility. These various combinations are dependent upon a number of weather factors which create layers within the snow pack. There are some simple tests to determine snow pack stability that we will discuss and practice later.

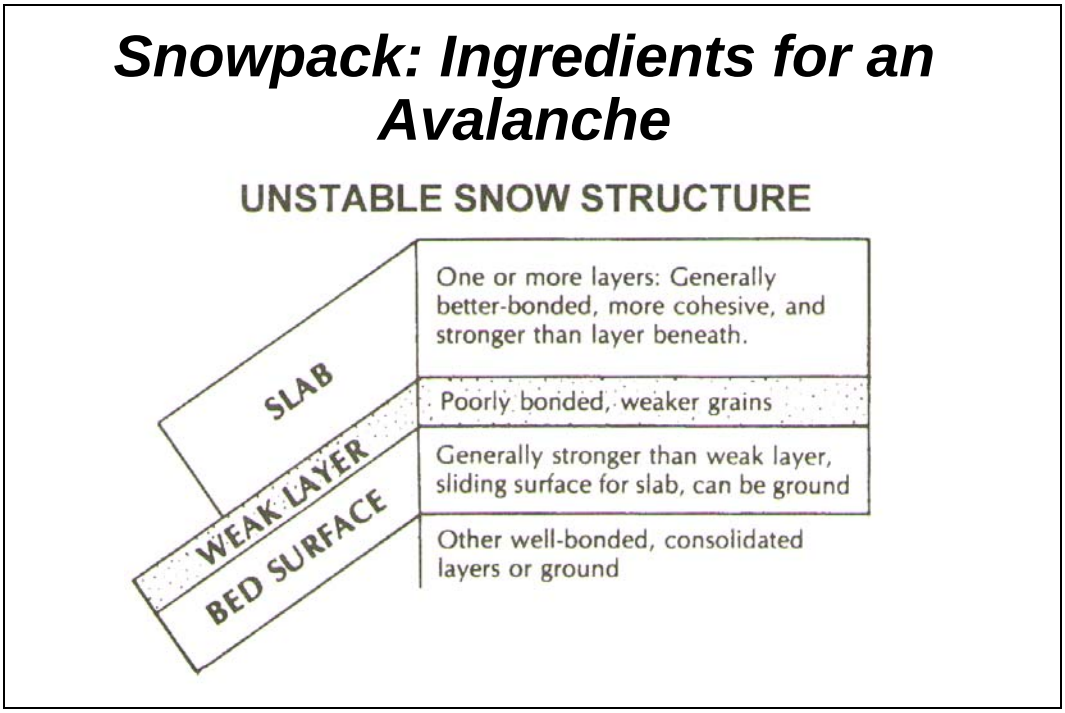

Learning Step/Activity 7 – Evaluate how weather relates to the avalanche hazard.

a. (Slide 23) The weather creates the conditions that can lead to a stable or unstable snow pack. Wind action, precipitation, slope aspect and temperature are some of the important factors that need to be considered. Avalanche forecasters record weather data to help determine the stability of the snow pack. Again, this can become very scientific, but for out purposes some simple observations can help us determine how weather has effected and is effecting stability and ultimately where safe and unsafe routes exist.

Weather

- ***Wind Action***
- ***Precipitation***
- ***Slope Aspect***
- ***Temperature***

b. (Slide 24) **Wind** will transport snow from one area to another. This action can more than double the snow on the lee side of a given slope. When this snow is deposited it forms a hard slab of compacted snow. Because there is so much more snow, the weight alone can trigger a very destructive slab avalanche. Snow can be top loaded, meaning it comes over the top of a feature, or side loaded meaning it comes around. Either way the result is the same. If travel is necessary, the windward side will often offer the safest route.

Wind Loading

Wind moves snow from one area to another forming a wind slab

c. (Slide 25) The bare area is the windward side. The lee side was top loaded.

Wind Loading

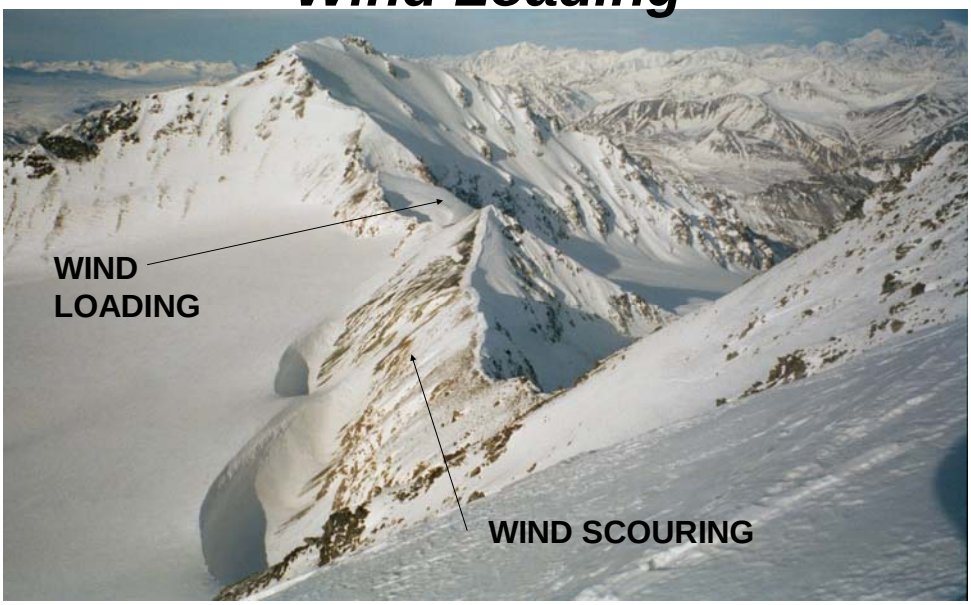

d. (Slide 26) Evidence of side loading. This picture also shows how much snow collects in the couloirs in the background.

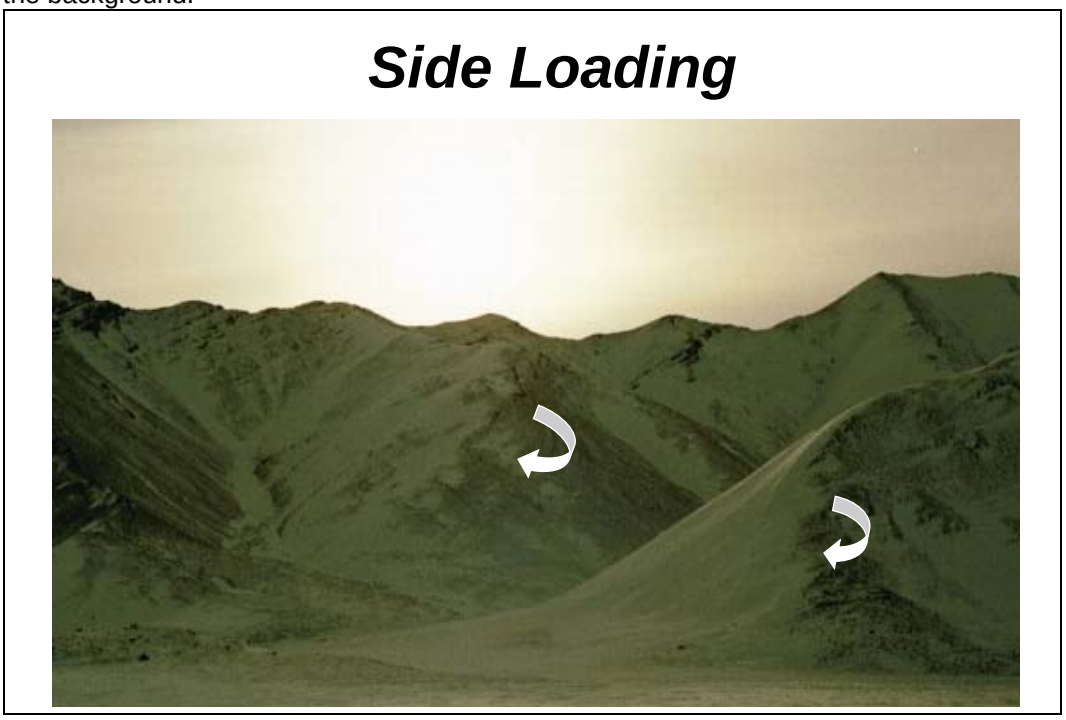

e. (Slide 27) A **cornice** is formed by wind action – wind moves snow and a “bridge” builds up that gets bigger with time. These may reach out away from the slope 20-30 feet. In some areas with turbulent winds they may be doubled on both sides of the ridge. On glaciated peaks there may be a crevasse present along the long axis of the ridge. The safe area of travel is well down hill on the windward side. A cornice can break off and start an avalanche.

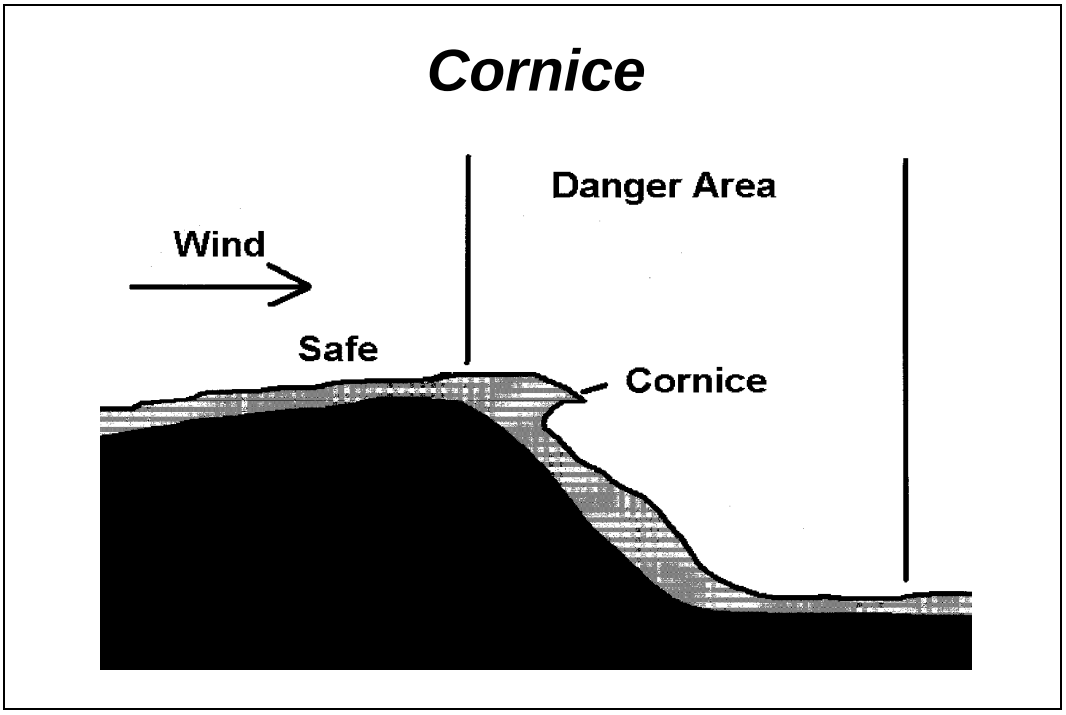

f. (Slide 28) The whole top of this peak is corniced, extending approximately 15 feet from the ridge. A person would not know they are standing over the void until they were right on top of it. Stay well back from the leeward edge of any ridge or peak.

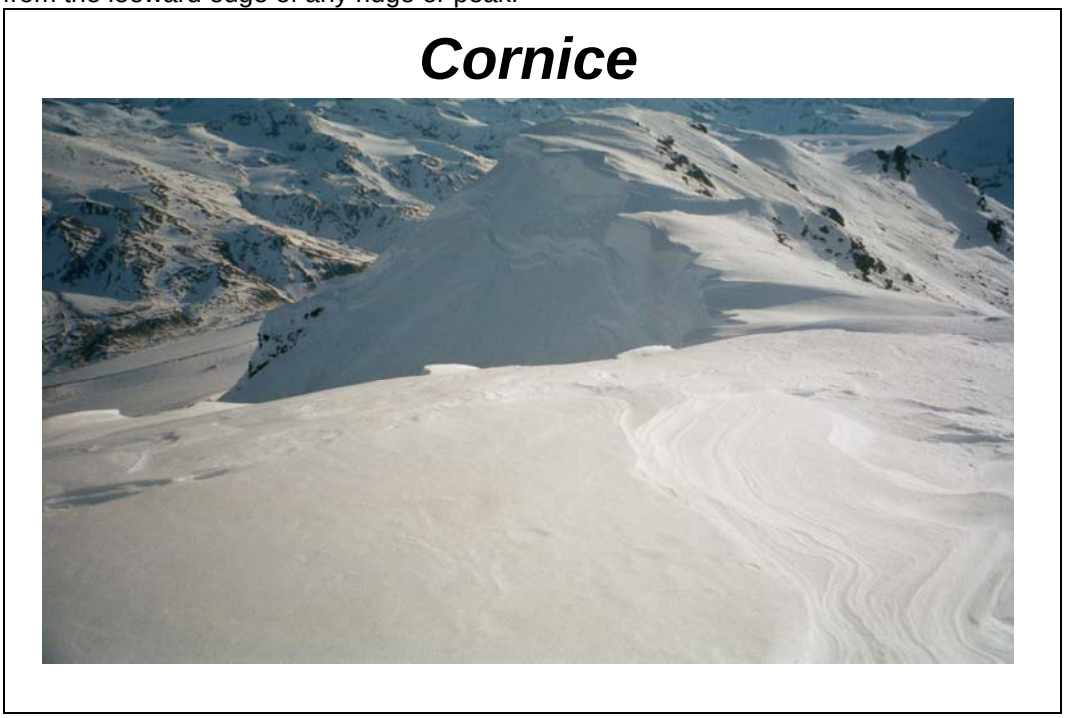

g. (Slide 29) A closer view of the cornice extending 15 feet from the ridge.

Cornice

h. (Slide 30) **Precipitation:** Recent heavy snow or rain is a contributing factor to avalanche danger. Both forms of precipitation add weight to the snowpack stressing the elastic strength.

i. Snow falling at a rate of one inch or more per hour is cause for immediate concern. Most natural releases will occur within 24 to 48 hours following a storm.

Precipitation

- ***Snow Fall***
- ***Slush (Rain Caused)***

j. (Slide 31) The aspect of a slope, or the direction it faces, greatly affects the occurrence of avalanches. North-facing slopes are usually more prone to avalanche in mid-winter while south-facing slopes are more dangerous in spring and on sunny days. As the sun moves to shine on a particular slope during the day, that slope usually becomes more avalanche prone.

Slope Aspect

- ***North facing slopes are avalanche prone in mid-winter***
- ***South facing slopes are more dangerous in spring and on sunny days***

k. (Slide 32) In a perfect world snow forms a six sided crystal called a stellar crystal. This is the same shape as what would be seen on a Christmas card. As these crystals fall through the atmosphere, the sharp edges lock onto each other. Upon reaching the ground, they continue to lock into each other forming a layer. Snow that forms as other crystals such as dendrites, plates and columns will bond differently or not at all. Graupel is similar to little beads that will generally not bond together at all.

l. As time passes the crystalline structure deteriorates and the snow will look like barbells joined together. This is the perfect snow pack.

m. Changes in temperature affect the bonding process of the crystal structure of the snowpack. This bonding is the cause of slab formation. Extreme drops in temperature will make the snowpack more brittle and likely to fracture. As temperatures in the snowpack increase, the bonding time of recent snow to old snow is decreased. In other words, a warmer temperature increases the stability of the snowpack. However, when temperatures rise above freezing, rain and meltwater can rapidly destabilize an otherwise safe snowpack. Increases in temperature can cause wet snow slides. If a cold snap occurs after a warm spell, the snowpack can freeze solid and bond very well. But this may form a layer of ice, resulting in a smooth surface layer that may become a bed surface for a new slab later on.

n. As temperatures increase, the bonding of the crystals happens more rapidly. This process is called the freeze/thaw cycle. Temperature usually drops after a storm. Snow covered terrain is usually most unsafe immediately after a storm due to the lower temperatures delaying the freeze/thaw process and the added weight (stress) on the old snow pack.

Temperature

- ***Wet slab avalanches from excess warmth or rain***
- ***Determines bonding of the snow through the freeze thaw cycle***

Learning Step/Activity 8 - Evaluate how people relate to the avalanche hazard.

a. (Slide 33) If the terrain, weather and snow pack conditions add up to unsafe conditions, adding people will often trigger an avalanche. Recreationally, people often have limited time to play and will often ignore blatant avalanche warning signs. Ignorance of the hazard can also contribute to accidents. Slabs as shallow as a few inches thick have slid and killed people. For the military, focus on the mission can cause leaders to ignore the warning signs. This was evident on a large scale in World War I on the Austro-Italian front where over 60,000 soldiers focused on the mission lost their lives to avalanches (most of them triggered by themselves). Overconfidence can also play a role. If you have traveled to an area repeatedly with no consequences you may be conditioned to expect that the area is always safe. You may also feel that you and your travel partners have the necessary training and equipment so that even if there is an avalanche, you can help yourselves. Look at the whole picture of what is happening and make an informed decision about whether or not to travel.

People: Human Factors

- ***Ignorance of the hazard***
- ***Mission focused***
- ***Traveled through an area many times and it was always safe before***
- ***Brain not engaged***
- ***Don't know don't go; you control this***

Learning Step/Activity 9 – Describe some of the common avalanche triggers.

a. (Slide 34) When terrain, weather and snow pack all combine to create prime conditions, all we need is a trigger to set off an avalanche. When more than one inch of snow falls per hour, a rapid load is being placed on the existing snow. This is also the case during a wind event. A cornice break can impact the snow with significant force and people moving on snow can also cause it to move. In all of these instances natural slides can be triggered. Of course personnel and vehicles moving on unstable slopes can also tip the balance and trigger a slide.

Overloading

- ***Additional Snow Fall (more than 1 inch an hour)***
- ***Windloading***
- ***Cornice Breaks***
- ***Personnel/Vehicles***

b. (Slide 35) Demolitions can be used to set off unstable snow. The use of decommissioned artillery pieces, air cannons and demolitions at ski resorts and roads is widely practiced. It must be noted though, the charge must hit the “sweet spot”, and some instability must be present in order to be effective. Use of artillery to clear a slope (Selkirk Range, Canadian Army) is pictured.

Demolitions

- ***Trigger avalanche(s) prior to moving***
- ***Must be detonated in the correct position***
- ***Could give away position***

Learning Step/Activity 10 - Describe general indicators of avalanche prone terrain.

a. (Slide 36) Evidence of previous avalanches- debris piles at the base of a slope, flagged trees, trees all pointed away from the slope
b. Steep slopes between 30º and 45º
c. Heavy snowfall- added weight to the existing snowpack
d. Visible fracture lines in the snow- even on low angle terrain indicates possible weaknesses on surrounding steeper terrain
e. Audible settling of the snowpack- a “whumpf” sound comes from collapse of an underlying weaker layer of snow or hoar frost
f. Severe changes in temperature- increasing temperature increases weight of surface layer(s) through melting
g. Lee slopes- usually are topped by a cornice; as the cornice is built the excess snow is deposited downslope by the same wind and adds weight to the existing snowpack
h. Snow plumes and high winds- build cornices and leeward deposits
i. Slushy "spring" snow- very heavy and apt to slide at high angles
j. An outside force to give the force to break the stability

General Indicators of Avalanche Prone Terrain

- ***Evidence of previous slides***
- ***Steep slopes between 30-45 degrees***
- ***Recent heavy snowfall adding to the weight of snowpack***
- ***Visible fracture lines in the snow***
- ***Audible settling of the snowpack***
- ***Severe temperature changes***
- ***Lee slopes***
- ***Snow plumes and high winds***
- ***Slushy spring snow***
- ***Outside force to break the stability***

k. (Slide 37) Flagging- vegetation shows signs of destruction from up slope; clear swaths surrounded by vegetation are previous avalanche paths; trees bent, broken trees, trees with branches missing up to a certain height are indicators that an area is prone to slides. Closer inspection reveals the size of the limbs and the force of the avalanche.

Tree Flagging

Learning Step/Activity 11 – Select the safest routes for travel in avalanche prone terrain.

a. (Slide 38) The most important part of military mountaineering is the ability to evaluate mountain hazards and select a way to avoid them or mitigate the risk if it is impossible to avoid the hazard. While traveling in snow covered, and potentially avalanche prone terrain there are a number of considerations for proper route selection. The answer to the question on the slide is almost always YES! Some of the considerations have already been discussed such as traveling on windward slopes as opposed to leeward slopes and avoiding terrain traps suck as creek beds and travel below cliffs.

Route Selection: <u>Is there a SAFER route?</u>

b. (Slide 39) Travel in Valleys. Sometimes travel below snow covered slopes is unavoidable. A consideration of the past weather and current snow pack conditions combined with common sense route selection (as far away from the potential slide path as possible) can make for safe travel. Consider the run-out area of any potential slides.

Route Selection: Travel in Valleys

- ***Traffic in the valley floor can trigger slides from above.***
- ***How will you know the risks?***
- ***Consider your Run-out Angle for safe travel in valleys***

c. (Slide 40) Run-out (Alpha) Angle-The measured angle from your location to the potential avalanche start point. This is based on elevation difference and potential runout distance. 19º or less is considered safe. Once a safe alpha angle has been achieved, insure you did not back into another hazardous area. Consider all surrounding slopes. The higher the start point upslope, the further you need to be from the base of the slope for safety. Slides on concave slopes tend to run further than slides on convex slopes.

Run-Out Angle

The MEASURED angle from you to the potential avalanche start point.

19 Degrees is considered safe

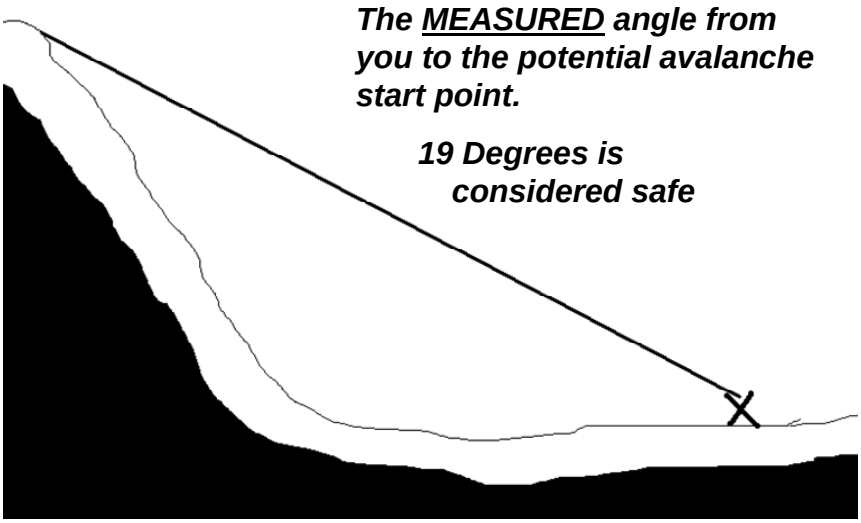

Learning Step/Activity 12 – Describe simple tests to evaluate the snow pack.

a. (Slide 41) Snow Pack Stability Tests - There are many tests that you can perform on the snowpack to determine stability. Many of the tests will tell you nothing unless you study snowpack science and study snowpack frequently enough to remain proficient and use the knowledge. For the average snow terrain traveler, there are a few tests that produce practical results and are simple to perform. These tests will be demonstrated in the field during the course of instruction.

Hazard Evaluation:
Snow Pack Analysis

- ***Ski-pole***
- ***Snow-pit***
- ***Shovel Shear***
- ***Rutschblock Test***
- ***Banzai Test***

Learning Step/Activity 13 – Assess the hazard level of a potential avalanche area.

a. (Slide 42) This is a hazard evaluation checklist designed by the Alaska Mountain Safety Center (Doug Fesler and Jill Fredston). It lists all four elements required for an avalanche and asks questions designed to determine the hazard level associated with the current conditions and circumstances. It uses a Green (Safest), Yellow (Caution Advised) and Red (No Go) system to make the evaluation. We will take this out to the field and use this checklist to conduct a thorough risk assessment. The five step risk management process is another way to evaluate the hazard.

AVALANCHE HAZARD EVALUATION CHECKLIST

Critical Data PARAMETERS:	KEY INFORMATION	Hazard Rating G	Y	R
TERRAIN: *Is the terrain capable of producing an avalanche?*				
-Slope angle (steep enough to slide? prime time?)		☐	☐	☐
-Slope aspect (leeward, shadowed, or extremely sunny?)		☐	☐	☐
-Slope configuration (anchoring? shape?)		☐	☐	☐
	Overall Terrain Rating:	☐	☐	☐
SNOWPACK: *Could the snow fail?*				
-Slab Configuration (slab? depth and distribution?)		☐	☐	☐
-Bonding Ability (weak layer? tender spots?)		☐	☐	☐
-Sensitivity (how much force to fail? shear tests? clues?)		☐	☐	☐
	Overall Snowpack Rating:	☐	☐	☐
Weather: *Is the weather contributing to instability?*				
-Precipitation (type, amount, intensity? added weight?)		☐	☐	☐
-Wind (snow transport? amount and rate of deposition?)		☐	☐	☐
-Temperature (storm trends? effects on snowpack?)		☐	☐	☐
	Overall Weather Rating:	☐	☐	☐
Human: *What are your alternatives and their possible consequences?*				
-Attitude (toward life? risk? goals? assumptions?)		☐	☐	☐
-Technical Skill Level (traveling? evaluating aval. hazard?)		☐	☐	☐
-Strength/Equipment (strength? prepared for the worst?)		☐	☐	☐
	Overall Human Rating:	☐	☐	☐

Decision/Action:
Overall Hazard Rating/GO or NO Go? **GO** ☐ **or NOGO** ☐

***HAZARD LEVEL SYMBOLS:**
R = Red light (stop/dangerous)
G = Green light (go/OK)
Y = Yellow light (caution/potentially dangerous).

©Alaska Mountain Safety Center, Inc.

Learning Step/Activity 14 – List the equipment required for back country travel in avalanche terrain.

a. (Slide 43) Avalanche Probe- at least eight feet long, ten is better; typical construction is many shorter sections connected by a cable, similar to tent poles.
b. Shovel- heavy duty, wide blade, short handle, packable. Plastic shovels are dubious.
c. Transceiver- quickest device used to locate a victim; they are quite expensive, about $200.00 each. THEY WILL NOT KEEP YOU FROM GETTING IN TROUBLE AND SHOULD NOT BE A REASON TO TAKE CHANCES! Must have at least two- one transmitting from the victim and the other switched to receive and worn by the searcher. A significant amount of time must be dedicated to gain proficiency.
d. Slope angle device.

Necessary Equipment in Avalanche Country

- ***Avalanche Probe***
- ***Shovel***
- ***Transceiver***
- ***Slope angle measuring device***

Learning Step/Activity 15 – Cross a questionable slope.

a. (Slide 44) If a questionable slope must be crossed the following actions must take place:

(1) Route must be the shortest possible. If possible use “islands of safety” such as trees, exposed rocks etc.

(2) A watch is posted to note the person’s direction of travel and note where they go should a slide occur.

(3) Disconnect ski pole and ski binding leashes so they can be discarded rapidly. A heavy rucksack can drag you under, a light puffy rucksack can aid in flotation.

(4) Cross one at a time.

Crossing a Questionable Slope

- ***Loosen equipment***
  - ***Remove pole straps from wrists Disconnect safety leashes from skis***
  - ***Loosen rucksack straps***
- ***Cross one at a time with a watch posted***

Learning Step/Activity 16 – React to an avalanche.

a. (Slide 45) Discard ski poles and skis if able. Also discard a heavy pack.

b. A swimming motion can help to maintain a surface position. Fight hard to maintain this surface position.

c. Try to form an air space as soon as you stop.

If Caught in an Avalanche

- ***Attempt to release skis***
- ***Remove heavy rucksack***
- ***Use Swimming Motion***
- ***Create an Air Space***
- ***Try to find the surface***

d. (Slide 46) Watch the victim. Note where they went on the slide path and terrain traps that may hold them.

e. After the area has been ascertained to be safe, begin looking for the victim.

f. Go to the last point seen and mark it.

g. Look downslope for surface clues, but do not remove them. Use them as you would the sights on a rifle. They will usually point downhill to the area of burial.

h. Begin a beacon search if your group has them. Ensure EVERYBODY is in receive mode. Some of the party can begin in the deposition zone, others in terrain traps. There is one person in charge and the effort must be organized. Utilization of beacons will be covered in a practical exercise in the next block of instruction.

i. If the party was not using beacons then probing will be necessary. Avalanche probes are preferred, but ski poles with the baskets removed, long sticks, or any other long rigid object will work.

j. Don' t go for help. You are the help.

If you witness others caught in an avalanche

- ***Keep your eyes on the victims.***
- ***Note terrain traps***
- ***Look for surface clues***
- ***<u>Organize</u> search***
- ***Don't go for help. <u>YOU ARE THE HELP!</u>***

NOTE: At this point the instructor will review and summarize the computer based instruction. The next Learning Steps/Activities will be performed in the field IAW the published training schedule for the course in session.

NOTE: The remainder of the Learning Steps/Activities are performed in a field environment.

Learning Step/Activity 17 – Conduct hasty snow stability tests and terrain evaluation during travel.

a. As you travel on the snow occasionally push your ski pole into the snow and “feel” the layer construction with the basket as you pull the pole from the hole. Not scientific, but this test gives you clues as to the strength of the snow pack.

b. If you are making switch backs while ascending a hill, you can jump on the uphill track where you changed direction. You are looking to see if you can make the snow slide. Snow that slides easily is an indicator of instability. This test will show the bonding of the top layers only. Of course this test must be done on a slope with little or no consequence; that is you want to conduct the test where if you do create a snow slide, it does not have the potential to bury you or others.

c. Find and ski little “rollers” or small hills along your route. These should be of the same aspect and steepness of the larger hill you intend to climb. Again, this test should be performed in an area with little to no consequence to you or others.

d. Begin to form an opinion about the terrain you are traveling over (is it red, yellow or green terrain). Note the angle of the slopes you are moving on. Get your protractor out and do some measuring. Look at the terrain above you as you travel. Think about the potential for avalanche coming from above. Think about the run out angle if an avalanche were to occur above you (again use your protractor to determine the run out angle). Watch out for terrain traps and think about the consequences of moving through a particular area.

e. You should continue to do this as you travel over and over again. Results in one area can differ dramatically after a few hundred meters or even a few feet. You are trying to develop an overall picture of what is going on around you, not just a localized one.

Learning Step/Activity 18 – Dig a snow pit and evaluate the snow pack.

a. Snow pit test- This test gets your eyes and hands into the snow pack. Choose a safe slope with a similar aspect, direction and angle (must be at least 30 degrees), as the suspect slope or the slope you want to travel.

b. Carefully dig into the bank above you with a shovel or similar device. You should go down approximately six feet or ground level in shallower snow. When finished you will have three walls of the snow pack exposed. The walls should be straight and smooth. In this pit, you can further analyze the strengths and weakness of the layers of snow, the bonding between old and new snow layers.

c. At this point you can see the different layers of snow. Touch them and see how hard or soft they are and look for any hoar snow (also know as sugar snow or plates). After poking around in the walls, re-smooth them. Take a protractor or credit card and cut from the top of the snow pack down the front wall. As you cut you should notice the different layers of snow that have formed over time with different weather events.

d. You are looking for the three ingredients in the right combination that could create a slab avalanche. That would be a slab (well consolidated snow) on top of a weak layer (poorly bonded snow) on top of a bed surface (e.g. smooth ground surface, an ice lens that formed early in the season). You can use this information to begin to determine the stability of the snow pack. Along with some of the hasty steps you performed earlier and some of the other stability tests we will demonstrate next you can give the snow pack a red, yellow or green evaluation.

Learning Step/Activity 19 – Conduct the shovel shear test.

Method

a. Start with a snow pit similar to the one you constructed earlier. Isolate a column of the snow on all sides creating a column as shown in the figure below (column is 1 foot by 1 foot by depth of the pit). The column should be of similar size to the blade of the shovel. Dig out the sides of the column without pressing against the column with the shovel, (this affects the strength). To isolate the rear of the column, use a rope, string or snow saw to saw from side to side to the base of the column.

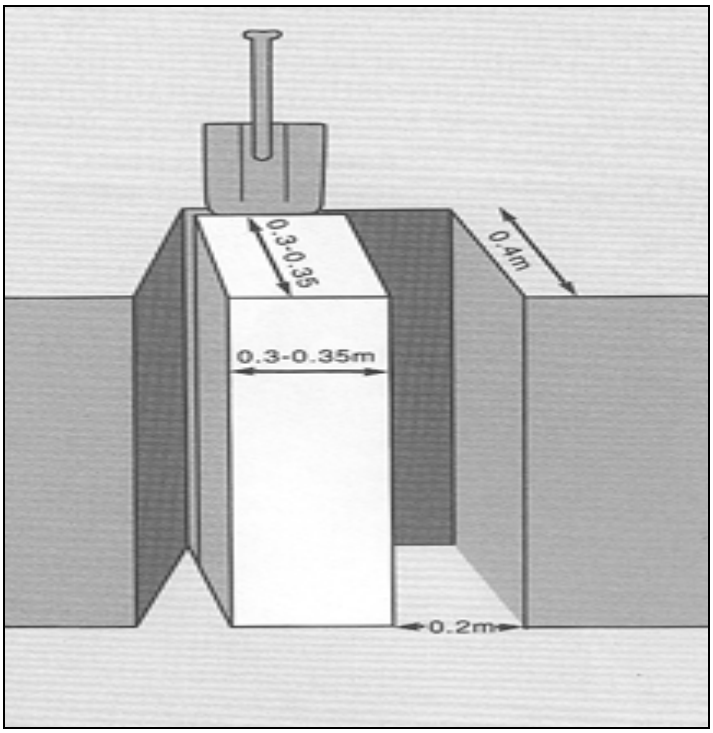

b. If the column remained standing while cutting the rear, place the shovel in the cut behind the top of the column. Pull on the shovel as close to the snow as possible. Don't jerk or pry the shovel, pull straight out. Note how much force it took to make the column fail.

(1) Very Easy - fails during cutting or insertion of the shovel. Snow conditions highly unstable. Natural avalanche occurrences are to be expected. Any steep slope of the same orientation is suspect. If the depth of snow above the sliding layer is approximately 6", look for an alternate route.

(2) Easy - fails with minimum pressure. Snow is unstable. Natural avalanche releases likely. Skier releases highly likely. Keep off steep slopes.

(3) Moderate - fails with moderate pressure. The most difficult result to interpret. Snow on steeper slopes is likely to fail with less effort. Take precautions if you decide to cross slopes.

(4) Hard - fails with firm, sustained pressure. Stability at this location.

(5) Collapse - Block settles when cut. Common in cold dry climates. Confirms a weak layer of depth hoar. If you are uncertain of the strength of overlying snow layers, perform the Compression Test.

c. Note the bottom shape of the part that failed. If it and the surface it separated from are smooth, there is significant instability (very easy, easy and moderate force). If it is very irregular (moderate and hard) there is more stability.

d. This test measures only the amount of shear the snow will tolerate and only in a small area. Several pits will need to be dug in a wide area to gain a better picture of what is happening within the snow pack, but this test does give another clue as to the stability of the snow pack.

Learning Step/Activity 20 – Conduct the compression test.

a. Start with a snow pit..

b. Isolate a column of snow about one foot by one foot as you did in LSA-18. Place the blade of the shovel flat on top of the column. Strike it flat and easy with the palm of your hand. Start with 10 taps, resting the palm of your hand on the shovel and articulating from the wrist. If the column does not fail execute 10 additional taps by articulating from the elbow. If the column still has not failed, execute 10 more taps from your shoulder using the full weight of the arm. With this last step, allow your arm to fall onto the shovel; do not accelerate the arm.

c. Evaluate the snow pack as follows:

(1) Column fails when cutting or on 1-10 taps. Red light for the snow pack or unstable snow.

(2) Column fails after 11-20 taps. Yellow light for snow pack. Caution should be used on prime slope angles. This is a good day to manage the danger by managing (reducing) the angle of the slopes you travel on.

(3) Column fails after 21-30 taps or not at all. Green light or stable snow pack.

c. This test measures only the amount of compression the snow will tolerate and only in a small area. Several pits will need to be dug in a wide area to gain a better picture of what is happening within the snow.

Learning Step/Activity 21 – Conduct the rutschblock test.

a. The Rutschblock test uses your weight to determine the stability of the snow pack. It gives the best representation of snow pack strength because you use your weight on the snow to determine snow pack stability. The Rutschblock Test is the easiest to evaluate and understand and the most accurate for the typical snow traveler. To conduct the test:

(1) Expose a block that is 2 meters long, by 1.5 meters wide (see picture below) x 1.5 meters deep or to the ground. You can cut a trench that is .5 m wide to allow access to cut the back wall.
(2) Cut the back with a snow saw (with an extender handle) or a ski. The back cut must be deep enough to include any suspected weak layers. Angle the side cuts in towards the back, so the block will slide easily if it shears. If there's failure while digging, this area has significant instability.

(3) One person moves on their skis or snowshoes above the block without disturbing the block. Note at which step the failure occurs and give it a score of 1-7:

- Failure of the block by its own weight or by the person moving into position above. (Score of 1 or Red Light)
- One person on skis steps carefully on the block from above. (Score of 2 or Red Light)
- Skier weights skis by making a rapid knee bend. (Score of 3 or Red Light)
- Skier jumps. (Score of 4 or Yellow Light)
- Skier jumps a second time. (Score of 5 or Yellow Light)
- A person jumps on the block without skis. (Score 6 or Green Light)
- No failure observed. (Score 7 or Green Light)

b. Failure at load levels 1, 2 or 3 - stability is poor. Failure at level 5 - stability is fair. Failure at level 6 or no failure - stability is good. DO NOT SKI OR MOVE ON A SLOPE IF IT FAILS AT LESS THAN 2 JUMPS.

(4) For snowshoes:

- Cut the block 1.7m long x 1.5 meters.
- Complete the Rutschblock, following the steps above.
- Load the block using the same steps above.

Learning Step/Activity 22 – Conduct the banzai test.

a. This test is simple and fun. Find a slope with the same properties as the one you will move on. It must have no terrain traps below you and you must not be connected to any larger slopes that could slide.

b. At least four people link arms and jump onto the slope, landing on their behinds. If the slope moved count on other places with the same properties to be suspect.

Learning Step/Activity 23 – Predict the likelihood of an avalanche using the hazard evaluation checklist.

a. Use the hazard evaluation checklist below to record the information you have been gathering and give a Go or No Go evaluation of the current avalanche hazard.

Hazard Evaluation Checklist			
Terrain – Is the slope capable of producing an avalanche?			
	Red	**Yellow**	**Green**
Steepness (Is it steep enough to slide? Is it prime time?)			
Aspect (Leeward, shadowed, extremely sunny)			
Configuration (anchoring and shape)			
Subtotal			
Snow pack- Could the snow slide?			
	Red	**Yellow**	**Green**
Slab configuration (slab? depth? Distribution?)			
Bonding ability (weak layer, tender spots?)			
Sensitivity to triggers (How much force? Shear tests? Clues?)			
Subtotal			
Weather – Is the weather contributing to the instability?			
	Red	**Yellow**	**Green**
Precipitation (Type, amount, intensity, weight)			
Wind (Snow transport? Amount and rate of deposition?)			
Temperature (Storm trends? Effects on snow pack?)			
Subtotal			
Human Factors – What are the alternatives and their consequences?			
	Red	**Yellow**	**Green**
Attitude (Risks? Goals? Assumptions?)			
Technical Skill level (Traveling? Evaluating avalanche hazard?)			
Strength/Equipment (Strength? Prepared for the worst?)			
Subtotal			
Overall		**Go or No Go**	

Learning Step/Activity 24 – Practice safe travel techniques.

a. Safe travel through avalanche terrain is an art. One of the most important things you can do in avalanche terrain is to continually assess the hazard and make efforts to mitigate any risk that you find. This is probably the most important action you can take to keep yourself and or your unit out of danger. During movement, there are a number of ways to minimize your exposure to any dangers that may be present. You may (and probably should) conduct a through risk assessment, like the one we just conducted; the evaluation can then be used to make decisions about how you will move. Here are some techniques (from **Staying Alive in Avalanche Terrain**) to try for the different conditions you may encounter:

(1) Red Light conditions. You have observed any or all of the following:

- Recent avalanche activity
- Collapsing and cracking of the snow pack
- Most or all of your snow pit tests show unstable snow conditions
- Recent heavy loading of new and/or windblown snow
- Rain on new snow
- Rapid melting of new snow
- Sinking in past your knees while walking on wet snow

(2) During red light conditions you must:

- Manage your slope angles. Travel on terrain with slope angles of less than 30 degrees.
- Watch your run out angle.
- If you must travel on steeper terrain, do so in areas that are heavily wooded or wind scoured only.
- Travel one at a time through suspect areas and be sure to keep watch as an individual moves through the danger areas
- Be prepared to deal with the consequences of an avalanche.

(3) Yellow light conditions. You have observed any or all of the following:

- Localized recent avalanche activity
- Areas of collapsing or cracking
- Mixed results from snow pit tests
- More than two days since a heavy loading or rapid warming event
- Sinking in past your ankles when walking on wet snow
- Rain on old snow
- Rapid warming of old snow

(4) During yellow light conditions:

- This is where most avalanche accidents happen. You often get mixed results and may convince yourself that it is safe to take greater risks.
- You should stay on gentle terrain (less than 30 degrees) unless you have extensive experience.
- Travel one at a time through suspect areas and be sure to keep watch as an individual moves through the danger areas.
- Watch the run out angles and again be prepared to deal with a slide.

(5) Green light conditions. You have observed any or all of the following:

- No recent avalanche activity
- No collapsing or cracking
- Snow pit tests show stable conditions
- More than several days without heavy loading or rapid warming
- Thick refrozen snow
- Not sinking in past ankles when walking

(6) During green light conditions:

- Most routes are safe
- Continue to practice safe travel techniques

Learning Step/Activity 25 – Rescue avalanche victim(s) (initial steps).

a. Immediate action- Ascertain that the area is safe. Survivors at the avalanche site are organized into the first rescue team and immediately start rescue operations. If any indication of the location of the victim is found, random probing starts in that vicinity. The tip and edges of the deposition zone are also likely areas to search. A human body is bulky and is apt to be thrown toward the surface or the sides.

b. General Procedures- Establish from witnesses where the victim was just prior to the avalanche, then determine the point where the victim disappeared - the "last seen" point. Making use of this and any other information, establish a probable victim trajectory line leading to high priority search areas. Make a rapid but systematic check of the slide area and the deposition area and mark all clues. Look for skis, poles, ice axes, packs, gloves, hats, goggles, boots, or any other article the person may have been carrying, it might still be attached to the victim.

c. In many respects, a moving avalanche resembles a liquid. A human body, with a higher density than the flowing snow, would be expected to sink deeper and deeper into the avalanche; however, several factors influence this. Turbulence, influence of terrain, and the victim's own efforts to surface himself, all interact to determine the final burial position. Study of a large number of case histories leads to the following conclusions:

d. The majority of buried victims are carried to the place of greatest deposition, usually the toe of the slide.

e. If two points of the victim's trajectory can be established, a high probability exists that the victim will be near the downhill flow line passing through these two points.

f. Any terrain features which catch and hold avalanche debris are also apt to catch a victim.

g. If an avalanche follows a wandering gully, all debris deposit areas are likely burial spots. The likelihood of a victim being buried in a particular bend is proportional to the amount of debris deposited there.

h. Vegetation, rocks, and other obstacles act as snares. The victim tends to be retained above the obstacle. An obstacle may simply delay the victim's motion, leading to final burial down flow from the obstacle.

i. Maximum speed of the flowing snow occurs at the avalanche center. Friction reduces flow velocity along the edges. The closer the victim's trajectory is to the center of the slide, the greater his burial depth.

j. Efforts of the victim to extricate himself by vigorous motion and "swimming" definitely minimize burial depth. Conversely, the limp body of an unconscious victim is likely to be buried deeply.

k. An occasional exception to the above is emphasized. The victim may not be buried but may have been hurled away from the avalanche by wind blast. In the case of large and violent avalanches, a search of the surrounding terrain is advisable. Victims have been located in tree tops outside the slide area.

Learning Step/Activity 26 – Rescue avalanche victim(s) using a probe line.

a. Organize initial searchers and probers. Everyone should have a shovel or other tool for digging or if there are sufficient people, a shoveller(s) can be standing by to assist when needed. If the initial search reveals items from the victim, make an initial probe search in that area. This probing should take only a few seconds. If no other search method exists, make a coarse probe of all likely areas of burial, and repeat it as long as a live rescue remains possible. Resort to the fine probe only when the possibility of a live rescue is highly improbable, within the first thirty minutes. Unless otherwise indicated, start the coarse probe at the deposition area.

b. Probing for Avalanche Victims- Probing offers the advantage of requiring very simple equipment that can be operated by personnel without previous training. Although the probers do not need previous training the search leader must be familiar with the technique to insure proper execution of the probe line.

c. For the probing operation to be effective, lines must be orderly and properly spaced. To insure systematic and orderly probing, the number of personnel per line should be limited. Twenty per line is satisfactory, while thirty is normally the upper limit. The number of probers in the line will be dictated by not only the width of the area to be probed but the amount of people available. A string may be used to keep the probe lines aligned, but will require added time to maintain.

d. The probe line maintains a steady advance upslope. Advancing uphill automatically helps set the pace and permits easy probing to the full length of the probe. Probing does not come to a halt when a possible contact is made. The probe is left in contact and the line continues. A shovel crew follows up on the strike by digging down along the pole. Extra probes are carried by the shovel crew to replace those left in contact. Such a plan of operation is especially important when more than one victim is buried. Striking a body gives a distinct feel to the probe. This feel is easily recognizable in soft snow but is less easy in hard compacted snow. A common problem is encountering debris within the snow that can be mistaken for the victim. The only sure check is by digging.

e. Two distinct probing methods are recognized: Coarse Probe and Fine Probe. As evidenced by their names, coarse probing implies a wider spacing of probe pole insertions with emphasis on speed. Fine probing involves close-spaced probing with emphasis on thoroughness. Coarse probing is used during initial phases of the search when live recovery is anticipated. Fine probing is the concluding measure which almost guarantees finding the body. The coarse probe technique has a 70 percent chance of locating the victim on a given pass, while the fine probe has essentially a 100 percent chance of locating the body. The Coarse Probe functions as follows:

(1) Probers are spaced along a line 30 inches center to center, with feet about 15 inches apart. Think of a squad line formation at close interval.

(2) A single probe pole insertion is made at the center of the straddle span.

(3) On signal of the probe line commander, the group advances 20 inches and repeats the single probe.

(4) Three signals are used for the complete sequence-

"DOWN PROBE"

"UP PROBE"

"STEP FORWARD"

By adhering to these commands, the leader can keep closer control of the advancing line of probers. It is important that the signals be adjusted to a rhythm which enforces the maximum reasonable pace. Further, a string could be used along the probe line to keep the probers dressed, although this would require the use of two people to control the string. Strict discipline and firm, clear commands are essential for efficient probing. The probers themselves work silently.

f. The Fine Probe- The fine probe functions as follows:

(1) Probers are spaced the same as for the coarse probe. Each man probes in front of his left foot, then in the center of his straddled position, and finally in front of his right foot.

(2) On signal, the line advances 1 ft. and repeats the probing sequence. Each probe is made 10 inches from the adjacent one.

(3) The commands for the fine probe are:

"LEFT PROBE"
“UP PROBE"
“CENTER PROBE"
"UP PROBE"
"RIGHT PROBE"
"UP PROBE"
"STEP FORWARD"

g. Good discipline and coordinated probing is even more necessary than with the coarse probe. Careless or irregular probing can negate the advantages of fine probing. Use of a string to align the probers is especially important with the fine probe. The three insertions are made along the line established by the string line which is then moved ahead 1 foot.

Learning Step/Activity 27 – Rescue avalanche victim(s) using a beacon.

NOTE: There are many beacons available and each has features and options that must be familiar to the user. You must be familiar with the particular beacon you are using, adhere to the manufacturers instructions and practice with it frequently to maintain proficiency. This block of instruction will provide instruction on the use of the F-1 Ortovox.

a. The same procedures for establishing the victims general location are followed.

b. Ensure everybody in the group turns their beacons to receive or off to eliminate the possibility of false signals.

c. If the group is large enough, some members can begin searching in likely terrain traps while the bulk searches in the deposition zone.

d. To search:

(1) Set the transceiver to the highest strength and begin moving.

(2) As you get closer to the buried beacon the signal will get stronger. Most modern beacons will prompt you to change the setting to the next lowest. If you come to a point where the signal fades, mark that spot, turn around and retrace till you find the strongest signal.

(3) Upon returning the strongest signal position, turn 90 degrees left or right and repeat the process. This should narrow your search area.

(4) After you have cycled through the settings on the transceiver, you are ready to begin a fine search. This is the same as above; only instead of walking you pass the beacon from hand to hand.

(5) After you have found the strongest signal on the lowest setting, DO NOT LAY THE BEACON ON THE SNOW. It will invariably get buried. Get probes and probe for the victim in a quick efficient manner.

(6) Because of the way beacons transmit their signal you may find it helpful to turn and walk several feet off your present course when a very strong signal is gained and lost quickly. During a fine search point the beacon downward and rotate its orientation periodically.

(7) Speed is of the essence. Narrow down the search area as quickly as possible. In the case of multiple burials, expose the victims face, make sure they are breathing, turn off their beacon and MOVE ON. If you are part of a larger group you can assign someone to dig this person out.

SECTION IV. SUMMARY

You now have a general understanding of the avalanche hazard and some of the steps you can take to mitigate risk when moving in avalanche prone terrain.

Check on Learning.

1. What are the four elements required for an avalanche?

Terrain between 20 and 60 degrees slope angle, an unstable **snow pack** that contains a slab, weak layer and bed surface, the **weather** conditions to create the unstable snow pack and a **trigger** such as a skier.

2. Does having a slab on a slope of 30 degrees mean that the slope will slide?

Not necessarily. If there is a weak layer and bed surface below the slab and there is a trigger there is a high probability of a slide. But the presence of a slab itself on a 30 degree slope does not mean that the snow will avalanche.

SECTION II. INTRODUCTION

Motivator: You are all familiar with camouflage techniques in temperate climates. In a cold, snow covered environment there is some additional equipment that you must use and some additional techniques and precautions that you must take in order to camouflage yourself and your equipment.

Terminal Learning Objective

ACTION	Camouflage self and equipment in a snow covered environment
CONDITION	In any snow covered environment, given individual load bearing equipment, helmet, weapon, ECWCS, over whites and camouflage tape
STANDARD	Select the camouflage outerwear appropriate for the terrain. Camouflage equipment and weapon without affecting the function. Change camouflage scheme as the conditions change.

Safety Requirements: Daily risk assessment conducted; adjustments made to clothing and warming shelter breaks/CWI checks based upon current conditions.

Risk Assessment: Low

Environmental Considerations: None

Evaluation: You will be tested on your knowledge of camouflage, during a one hour written examination at the conclusion of the course (Refer to training schedule for date/time of exam). You must score a 70% on the written exam. If you fail the written exam, you will be given a second exam after re-training has been conducted. If you fail this second examination, you will be dismissed from the course.

Instructional Lead-In: This lesson provides you with some techniques and procedures for camouflage in the snow covered environment.

SECTION III. PRESENTATION

Learning Step/Activity 1 – (Slide 3) Camouflage yourself and your individual equipment using techniques appropriate for different snow-covered terrain.

a. You are issued the over-white uniform. Simply putting these items on as the weather turns cold does not constitute good camouflage technique. Some thought needs to be put into blending into the surroundings and changes may be frequent to match the changing terrain.

WARNING: Camouflage paint will not be worn when temperatures are below 32º F IAW USARAK PAM 600-2. The main reason for this is that it will become impossible to monitor soldiers for cold weather injuries (frostbite) when skin camouflage is worn.

b. Camouflage in a cold weather environment. These are some of the combinations that are typically used in snow covered terrain:

(1) Thickly wooded areas- wear ACU pattern uniform or ACU pattern with white trousers.
(2) Low brush or light scrub area- wear over white parka top with ACU pattern trousers.
(3) Forested areas- wear ACU pattern top with over white bottoms.
(4) Above tree line, open areas- wear full over white camouflage.

c. Additional considerations:
(1) Avoid routes requiring numerous changes in camouflage pattern.
(2) Have camouflage garments handy so changes in pattern can be made fast, on the move.
(3) Like anything else there are exceptions – for example, after a heavy snowfall, complete over whites may be appropriate for any of the terrain listed.

d. (Slide 4) The individual is dressed in ACU ECWCS parka and white trousers.

Thickly Wooded Area

e. (Slide 5) Approximately waist high vegetation. Soldier incorporates over white Kevlar cover, top and gloves, LBV broken up with white engineer tape.

Low Brush/Light Scrub

f. (Slide 6) This pattern is used when moving on trails or road systems. Soldier wears over white bottoms, ECWCS parka and standard helmet cover.

On trails/roads

g. (Slide 7) The entire over white system is used in open areas or when operating above tree line.

Open Field

h. Material that can be used for camouflage in the cold weather environment.

(1) Tape is good but can become brittle in cold and fall off (use cloth tape).
(2) Old over whites/cloth.
(3) Spray Paint (check with unit armorer).
(4) Engineer tape.
(5) Use as much white as necessary to break pattern and blend with surrounding snow cover. Snow covered terrain is rarely solid white. Leaving some black exposed on the M16, for example, blends better than completely covering the weapon in white.
(6) Care must be taken not to interfere with moving parts and normal equipment/weapons operation.

What Can Be Used?

Learning Step/Activity 2 – Demonstrate camouflage techniques for different terrain situations.

Give students the opportunity to establish a hasty ambush on a trail. After 15 minutes walk through and try to identify positions.

SECTION IV. SUMMARY

You now have experience selecting camouflage patterns in a snow covered environment.

Check on Learning.

1. What pattern should you wear in open terrain or above tree line?

The entire over white set should be worn.

2. What pattern should you wear on roads and trails?

Over white trousers with ECWCS Parka top.

SECTION II. INTRODUCTION

Motivator: It is relatively easy to hit targets on a range once you have received some basic instruction. In fact most have you have probably shot expert or close to it. When you are on the move, it is more difficult to come to a stop control your breathing and make good shots. Add in movement on skis or snowshoes and it becomes even more difficult to put rounds on target.

Terminal Learning Objective

ACTION	Engage targets with assigned weapons in a snow covered environment
CONDITION	Given load bearing equipment, helmet, assigned weapon, ECWCS, over white set, skis or snowshoes with ski poles, ahkio sled and M-122 tripod, traversing and elevating mechanism
STANDARD	Engage targets from a standing, kneeling and prone position on skis and snowshoes. Engage targets using crew served weapons.

Safety Requirements: Ensure that students are properly dressed and equipped prior to conduct of training. Squad leader will conduct a risk assessment with students based upon the current conditions. Squad leader will assign buddy teams to watch for cold weather injuries. Squad leader is responsible for taking breaks in warming shelters as required. Range procedures IAW Ft. Greely range Control and NWTC Range SOP are in effect.

Risk Assessment: Low

Environmental Considerations: None

Evaluation: You will engage targets from a standing, kneeling and prone position on skis and snowshoes. This practical exercise will prepare you to move over a 10K cross country course; on the course you will engage targets from a standing, kneeling and prone position.

Instructional Lead-In: This lesson gives you firing techniques while moving on skis and snowshoes.

SECTION III. PRESENTATION

Learning Step/Activity 1 – Carry a weapon while using skis or snowshoes.

a. Attach the sling to the rear sling swivel and the slip ring (where the hand guards attach to the receiver).
b. Hang the weapon over your neck and firing side shoulder, muzzle down. The weapon can be placed behind the canteen on the firing side hip to keep it out of the way while using ski poles.

OR

c. Attach the sling at the slip ring and the small of the butt stock and hang in the same manner.

OR

d. Another method is by use of a “three point sling” available commercially.

Learning Step/Activity 2 – Select individual firing techniques on skis and snowshoes.

a. **Standing on Skis and Snowshoes** - This firing position is best applied when fire must be returned quickly such as during an assault. When cover is available it should be sought. Make use of the depression around a tree trunk as it will lower the shooters profile. Do not allow snow to foul the weapon especially while it is hot. It is a good technique for long distance and rolling terrain and it is easy to get into. A major disadvantage is that it presents a high silhouette for the enemy. To get into position:

(1) Assume a suitable standing firing position. Based on your situation, assume the position that will allow you to observe and engage targets, yet minimize your exposure to enemy fire.
(2) Place the ski poles in the non firing hand in an X pattern.
(3) Place the fore stock of the weapon in the crotch of the X for support. This will require the Soldier to squat slightly.
(4) Place the ski or snow shoe of the firing side leg in a half herring bone position.
(5) Maneuver by running on the snowshoes or kick and glide on skis. Carry the ski poles in the non-firing hand and the weapon in the firing hand.

Standing Firing Position

b. **Kneeling firing position skis**

(1) Assume a suitable kneeling firing position. Based on your situation, assume the position that will allow you to observe and engage targets, yet minimize your exposure to enemy fire.
(2) Place the ski poles in the non firing hand in an X pattern.
(3) Place the fore stock of the weapon in the crotch of the X for support.
(4) Place the ski or snow shoe of the firing side leg in a half herring bone position. Take care that the snowshoe shovel does not injure the shin. If using skis, the firing side knee may be placed directly on top of the ski.
(5) Point the ski or snow shoe of the non firing side leg in the direction of the target.
(6) Maneuver by running on the snowshoes or kick and glide on skis. Carry the ski poles in the non firing hand and the weapon in the firing hand.

Kneeling on Skis

(7) Place the knee on the firing hand side on the ski to maintain stability when the snow pack is deep and unconsolidated.

c. **Kneeling on Snowshoes.** The technique is similar to kneeling on skis. However care must be taken to prevent the knee/shin on the firing hand side from being injured by the shovel of the snowshoe.

Kneeling on Snowshoes

d. **Prone firing on skis and snowshoes.** Similar to the standard prone position except that the soldier uses poles under elbows for flotation in deep snow and each ski or snowshoe is placed at ½ herringbone position. The snowshoes do not have to be placed in the ½ herringbone position. It provides a stable firing platform and a low silhouette, but it can be difficult to get out of, especially in deep snow.

Prone Firing Position on Skis

Prone with Snowshoes

Learning Step/Activity 3 – Select firing techniques for crew served weapons.

a. Crew served weapons cause problems because the additional weight will cause them to sink into snow. It may also be difficult to establish a stable firing platform on frozen ground or on ice. Effectively seating base plates for mortars into frozen ground may also cause problems. Some of the remedies for these problems were discussed in the Effects of Cold on Military Equipment; more detail is provided here on emplacement issues and firing platforms.

b. Using an ahkio as a support. The ahkio can also be used as a platform with the added advantage of keeping ammunition out of the snow. As noted in Effects of Cold on Military Equipment, it is useful for the AG to carry a small bottle of methanol (windshield wiper fluid) to defrost the weapon should it become iced over.

Crew Served - Using Ahkio as a Support

Crew Served - Using Ahkio as a Support

c. M-240 machinegun in tripod mode.

(1) Mount the machinegun on the tripod and secure it to the ahkio sled and the whole system can be moved at once if maneuver becomes necessary.
(2) Chip away ice or frozen ground for the tripod feet if the snow cover is shallow or non existent.
(3) Fill sandbags with snow and use as a support for tripods in deeper snow in more static positions.
(4) Skis or snow shoes of the gun crew are placed in a herringbone position.

Learning Step/Activity 4 – Demonstrate individual firing techniques on snowshoes.

Note: Have students demonstrate each firing position (standing, kneeling and prone) on snow shoes. After a dry fire run, students will get 5 rounds to demonstrate each firing position.

Learning Step/Activity 5 – Demonstrate individual firing techniques on skis.

Note: Have students demonstrate each firing position (standing, kneeling and prone) on skis.

SECTION IV. SUMMARY

You now have the skills to move and shoot on skis or snowshoes.

Check on Learning.

1. What can be used to provide a stable platform for a crew served weapon?

A snowshoe or and Ahkio sled can be used.

2. What are the advantages and disadvantages of the kneeling position?

The kneeling position offers greater stability than the standing position and is easier to get into than the prone, but is not as stable as the prone position.

SECTION II. INTRODUCTION

Motivator: Try to dig down in frozen ground and chances are you will either not get very far or will break your shovel. But you may still have the requirement to construct a fighting position. By using the materials at hand, you can build effective above ground fighting positions.

Terminal Learning Objective

ACTION	Construct a fighting position in a frozen, snow covered environment
CONDITION	Given load bearing equipment, helmet, personal weapon, appropriate clothing, a specific location with trees able to support a wall, a sector of fire, snow, logs, binding materials, and pioneer tools. A location for ice crete will be furnished if it is necessary to produce ice crete blocks. This location will have a water source, gravel source, forms of uniform size and snow.
STANDARD	Construct a fighting position wide enough for self, battle buddy and all equipment. Clear assigned sector of fire. Provide side, rear and overhead cover.

Safety Requirements: Ensure that students are properly dressed and equipped prior to conduct of training. Squad leader will conduct a risk assessment with students based upon the current conditions. Squad leader will assign buddy teams to watch for cold weather injuries. Squad leader is responsible for taking breaks in warming shelters as required.

Risk Assessment: Low

Environmental Considerations: In USARAK, trees greater than 4 inches in diameter, in military training areas, will not be cut down without prior approval from Range Control.

Evaluation: You will be tested on your knowledge of fighting positions, during a one hour written examination at the conclusion of the course (Refer to training schedule for date/time of exam). You must score a 70% on the written exam. If you fail the written exam, you will be given a second exam after re-training has been conducted. If you fail this second examination, you will be dismissed from the course.

Instructional Lead-In: This lesson provides you with some techniques for constructing fighting positions when the ground is frozen.

SECTION III. PRESENTATION

Learning Step/Activity 1 – Select building techniques for fighting positions in the cold weather environment.

Cold weather operations present some unique problems when constructing fighting positions. Ideally, positions should be dug into the ground, but in very cold climates the ground may be frozen to depths which make digging almost impossible with hand tools. Earth defenses of the conventional type are difficult to build without engineer assistance or demolitions. Consider the following when determining what type fighting positions to build, but always remember that, ultimately, there is no substitute for traditional defensive positions. Defenses constructed of snow and ice will eventually disintegrate under sustained fire, and are subject to the variability of the weather.

a. Construction materials. These are some of the construction materials that can be used to put together fortifications when the temperatures fall below zero: snow, frozen soil, ice, stone, timber.

Construction Materials

- ***Snow***
- ***Frozen soil***
- ***Ice***
- ***Stone***
- ***Timber***

b. Snow is an excellent construction material, but must be moved and packed in order for it to be truly effective at stopping projectiles. Moving and packing snow (i.e. shoveling it into piles), causes it to consolidate and increases the strength of this material. Wind will often do some of the work for you by packing snow into drifts that can be used as a start for shelters and fortifications.

Wet Snow

- ***Packs well and is easier to shape***
- ***Becomes stronger as it sets***
- ***Strongest when temperature decreases after construction***

Dry Snow

- ***Less suitable for expedient construction***
- ***Does not pack as well as wet snow***
- ***Generally takes a few hours to consolidate (after it is moved)***

Hard Packed Snow

- ***Wind moves snow and it consolidates into hard packed snow***
- ***Used for fortification and expedient shelters***

c. Ice Crete is created using a form (such as an MRE sleeve), and a combination of snow, soil, water rock sand gravel or silt. When it sets it will have all of the properties of Portland cement and is an excellent means of building above ground fighting positions when the ground is frozen solid. The primary disadvantage of this method is that it takes water to construct, which may not be readily available in large quantities.

Ice Crete

- ***Mixture of soil, water, rock, gravel, sand, silt***
- ***Pour and tamp into forms***
- ***Properties of Portland cement; stronger than ice but it will generally melt faster***
- ***Cover with snow to delay meting and to camouflage***
- ***Use for above or below ground positions***

d. Small Arms penetration tables. The construction materials already noted provide variable protection. This table shows the type and amount of material needed to stop a single 7.62 NATO round.

Small Arms Penetration Tables

Snow Characteristics	*Feet*	*Centimeters*
Newly Fallen Snow	**13**	**400**
Firmly Frozen	**8-10**	**245-300**
Packed Snow	**6.5**	**200**
Frozen Snow/Water Mixture	**4-5**	**120-150**
Ice	**3.25**	**100**
Ice Crete	**1**	**30**
NOTE: Based on penetration of a single 7.62 NATO round		

e. Snow wall construction for protection from grenades, small-caliber fire and HEAT projectiles. This chart provides additional information for construction of snow fortifications.

Snow Density (lb per ft3)	*Projectiles*	*Muzzle Velocity (ft. per sec)*	*Penetration (ft)*	*Required minimum thickness (ft)*
18.0-25.0	*Grenade fragments*	*-*	*2.0*	*3.0*
11.2-13.0	*5.56mm*	*3250*	*3.8*	*4.4*
17.4-23.7	*5.56mm*	*3250*	*2.3*	*2.6*
11.2-13.1	*7.62mm*	*2750*	*13.0*	*15.0*
17.4-23.7	*7.62mm*	*2750*	*5.2*	*6.0*
25.5-28.7	*7.62mm*	*2750*	*5.0*	*5.8*
19.9-24.9	*12.7mm*	*2910*	*6.4*	*7.4*
	14.5mm		*6.0*	*8.0*
28.1-31.2	*70mm HEAT*	*900*	*14.0*	*17.5*
31.2-34.9	*70mm HEAT*	*900*	*8.7-13.0*	*10.0*
27.5-34.9	*90mm HEAT*	*700*	*9.5-11.2*	*14.0*
Snow walls degrade under sustained fire. Penetrations given for 12.7mm or smaller are for sustained fire (30 continuous firings into a 1x1 foot area).				
Penetration characteristics of Warsaw Pact ammunitions do not differ significantly from US counterparts.				
Figure given for HEAT weapons are for Soviet RPG-7 (70mm) and US M67 (90mm) fired into machine packed snow				
High explosive grenades produce small, high velocity fragments that stop in 2 feet of packed snow. Effective protection from direct fire is independent of delivery method, including newer machine guns like the Soviet AGS-17 (30mm) or US MK-19 (40mm). Only armor penetrating round are effective.				

f. Below Ground Positions.

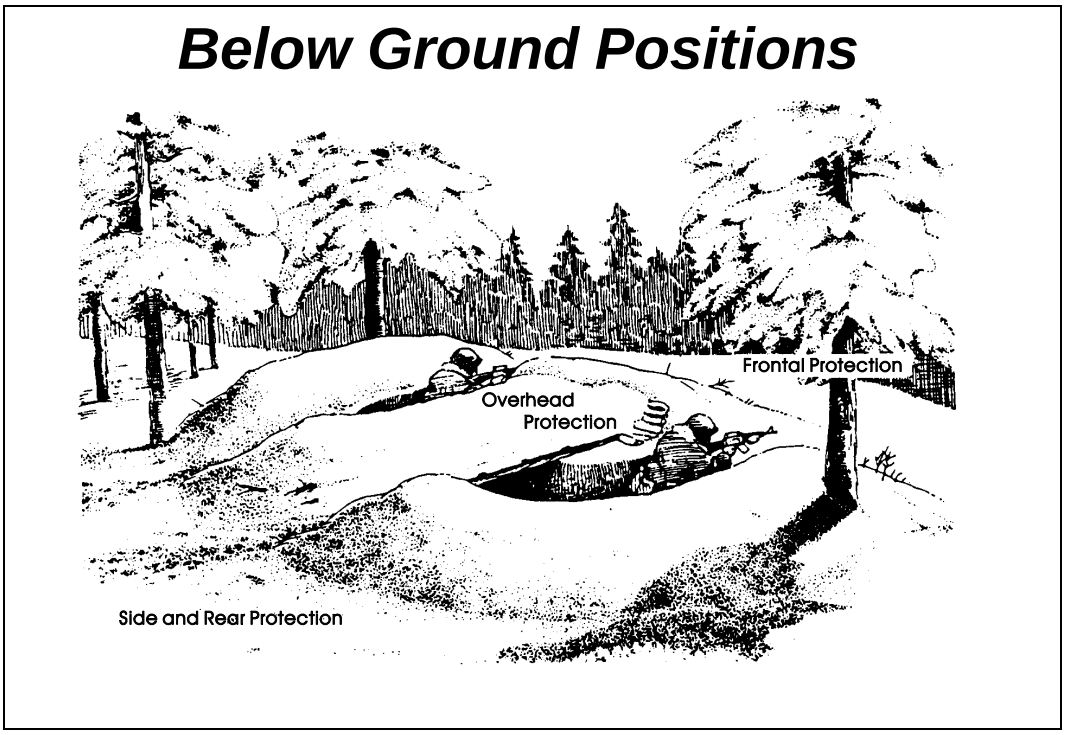

g. Follow these guidelines in constructing positions:

(1) Ground not frozen/light snow cover – construct conventional earth defense.

(2) Ground not frozen/deep snow cover – use combination of conventional positions and above ground positions.

(3) Ground frozen/light snow cover – if engineer support/demolitions are available, construct conventional defenses; when engineer support/demolitions are unavailable, positions must be built above ground.

(4) Ground frozen/deep snow cover – if engineer support/demolitions are unavailable, construct snow defenses. Otherwise, use a combination of conventional positions and above ground positions.

Below Ground Positions

- ***Use conventional methods when frost line is one foot thick or less***
- ***If more than one foot thick, engineer support or demolition is required***
- ***Snow for camouflage and additional protection***
- ***Use timber for revetment***

h. Standard rules apply for constructing overhead cover. Snow may be used in place of or with soil for overhead cover. Use snow for camouflage.

Overhead Cover

- ***Logs approximately 6 inches in diameter***
- ***3 feet of packed snow***
- ***Logs approximately 2 inches in diameter-bursting layer***
- ***Snow for camouflage***

i. Above Ground Positions

Above Ground Fighting Positions

j. Used when digging is not possible because of frozen ground or when little time is available. Parapets should be 8-9 feet in front and 2-3 feet thick on sides. Measure at the top of the packed snow. Flattening the top of parapets will help to deflect rounds. Snow bags, logs, and/or ice crete should be used in the construction of more permanent defensive positions.

Above Ground Fighting Positions

- ***Used when frost line is greater than one foot thick and demo/engineer support not available; also used when little time is available***
- ***Dug as deep as possible***
- ***Parapets made of snow – 8-9 feet thick in front and 2-3 feet thick on sides***
- ***Parapets flat on top to deflect rounds***
- ***Reinforce parapets by adding sticks, twigs, etc. to the snow during packing***
- ***Snow bags or logs used for revetments for greater resistance to small arms and shrapnel***

k. TOW/Machine Gun Position

TOW / Machine Gun Position

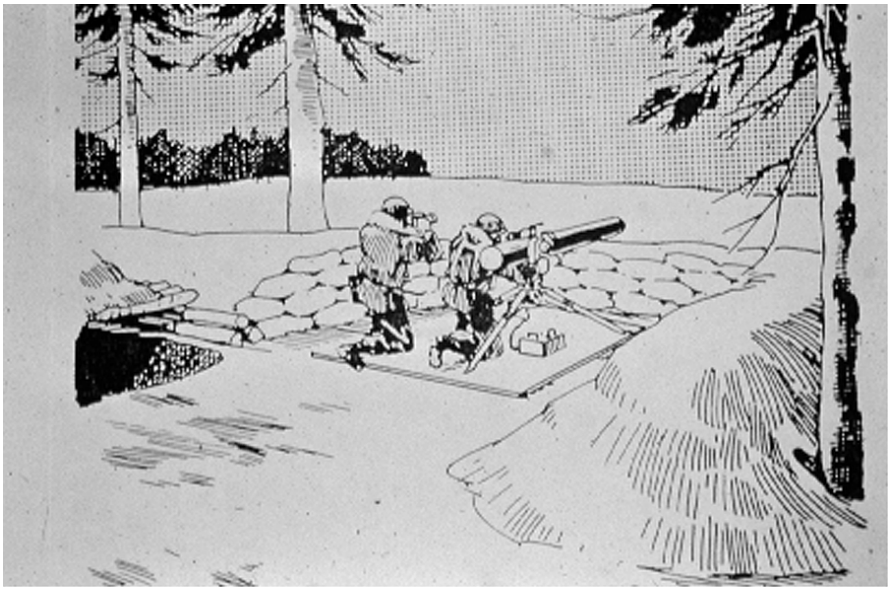

l. For any crew served weapon, a stable firing platform will need to be constructed. Plywood or timber will serve this purpose when there is time to prepare defenses. In the case of the TOW/ Javelin, overhead cover should be offset and to the rear to prevent back-blast from injuring personnel.

TOW / Machine Gun Position

- ***Platform of plywood or timber***
- ***Parapets 8 to 9 feet***
- ***Side parapets 2 to 3 feet***
- ***Overhead cover offset to the rear***

m. One type of above ground position is the snow trench. It should be dug to approximately arm pit depth.

Snow Trench

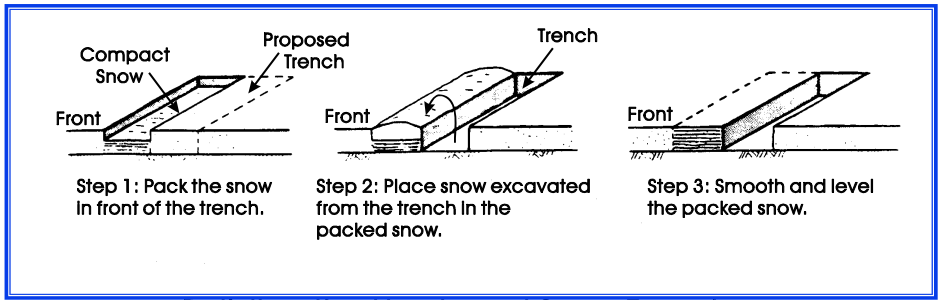

- ***At least two snowshoes wide***
- ***Pack snow in front of trench***
- ***Excavate the trench, placing snow to the front***
- ***Log or sandbag revetment can be used***

n. This is a variation constructed with timber revetments for increased protection from small arms and to prevent the shelter from collapsing under indirect fire.

Snow Trench With Wood Revetment

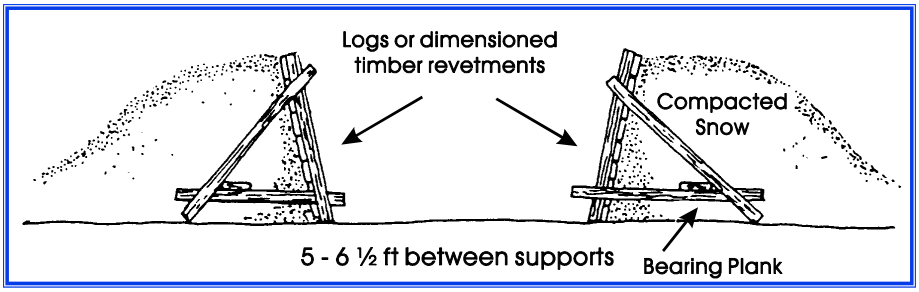

- ***Approximately 6.5 feet of packed snow***
- ***Snow trench dug armpit deep***
- ***Logs or timber used for revetment***
- ***Ensure a base platform is constructed for TOW and similar weapon systems***

o. Tree and Log Forms provide increased protection from small arms and indirect fires when below ground positions cannot be constructed. Timber should be at least 6 inches in diameter. Minimize gaps between logs. They can be filled with rocks, snow, sand gravel etc. and water can be used to make ice crete inside the form, further strengthening the position. Snow should be used to camouflage the position.

Tree and Log Form

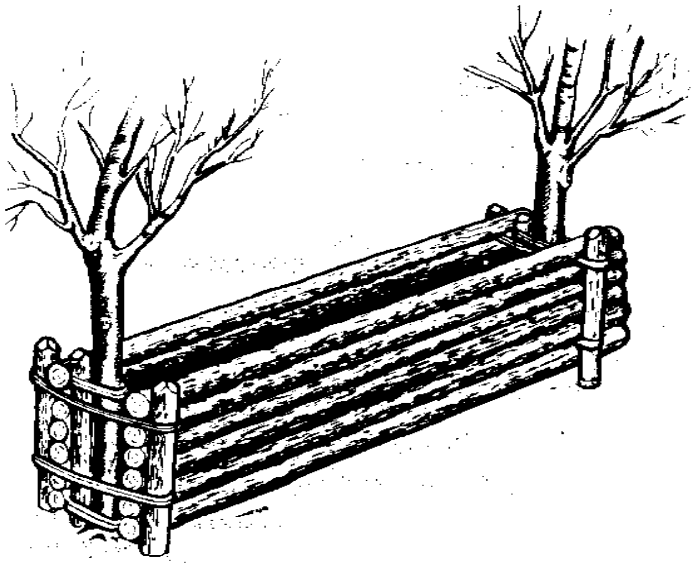

p. This is a free standing version of the tree and log form. The same considerations as tree and log form apply.

Log Form

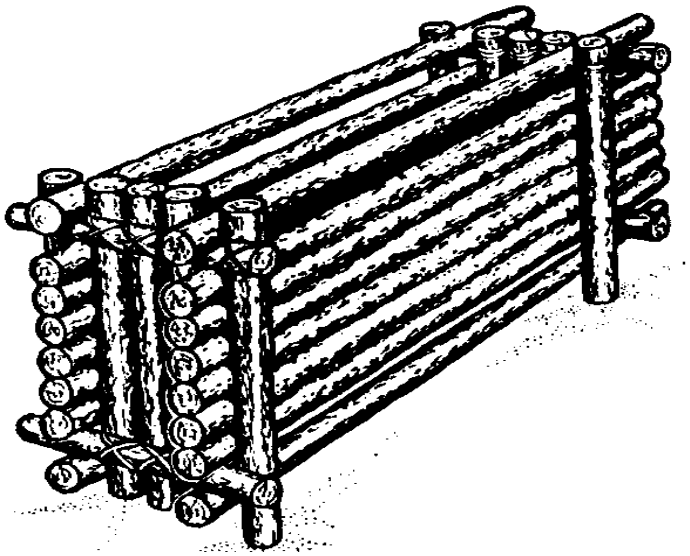

q. The tripod supported wall can also be constructed out of timber at least 6 inches in diameter and used as an effective above ground position. At least 8-9 feet of snow should be packed to the front of the position.

Tripod Supported Wall: Side View

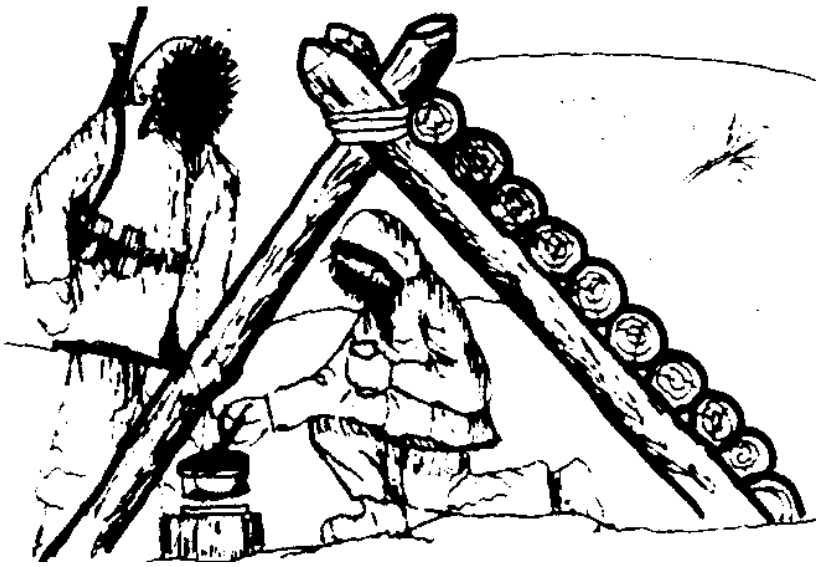

r. Rear view.

Tripod Supported Wall: Rear View

s. This is similar to the tripod supported wall, but is easier to construct. Again pack at least 8-9 feet of snow to the front and ensure that the logs are completely covered for concealment of the position.

Tree Supported Wall: Oblique View

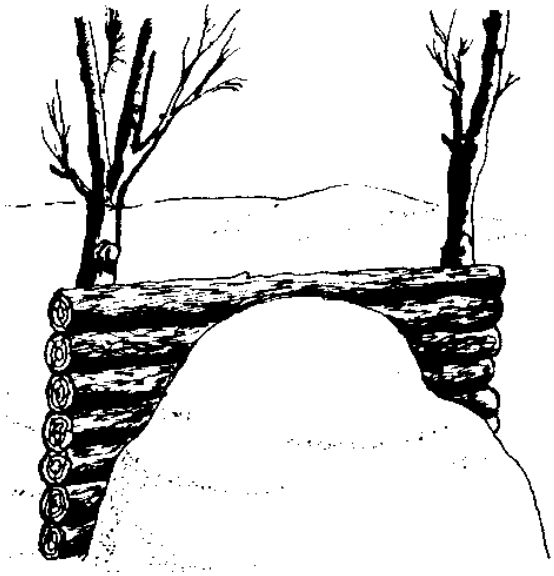

t. Side view of the position.

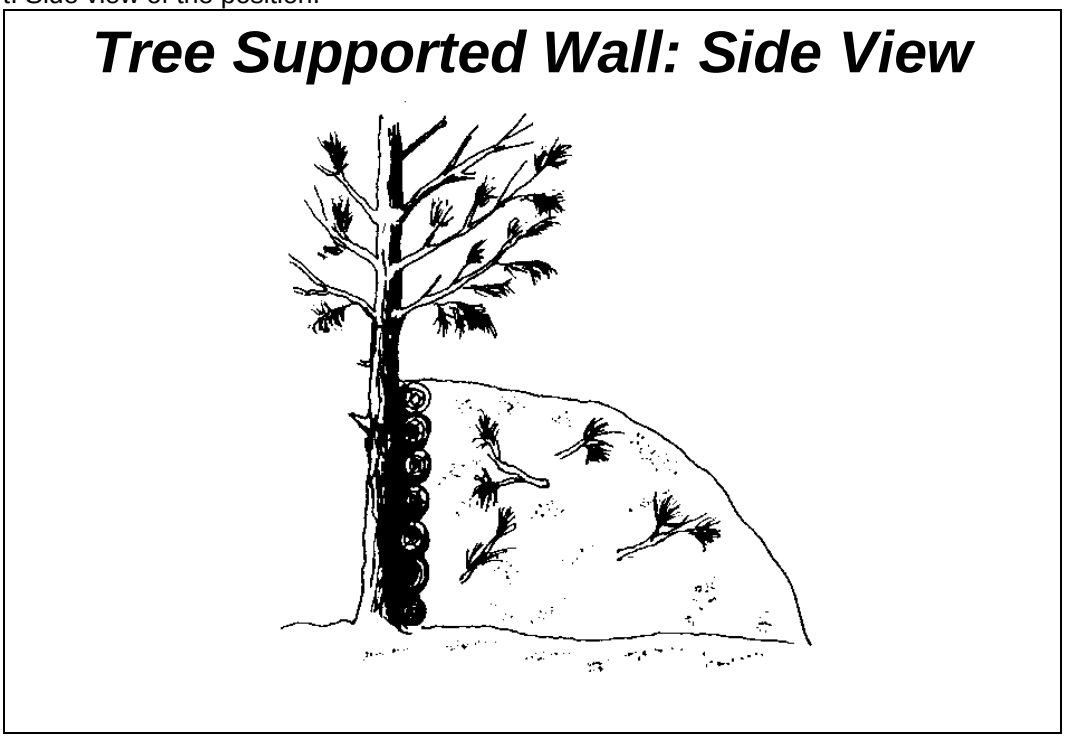

Learning Step/Activity 2 – Select building techniques for fighting positions in the cold weather environment.

Give students load bearing equipment, helmet, personal weapon, appropriate clothing, a specific location with trees able to support a wall, a sector of fire, snow, logs, binding materials, and pioneer tools. A location for ice crete will be furnished if it is necessary to produce ice crete blocks. This location will have a water source, gravel source, forms of uniform size and snow.

Each squad will construct a fighting position designated by the squad instructor. These positions will be constructed in the tactical bivouac area.

SECTION IV. SUMMARY

Check on Learning.

1. What are some of the materials that can be used to construct an above ground fighting position?

Snow, ice, soil, gravel, rock, trees.

2. How much packed snow does it take to stop a 7.62mm round?

6.5 feet of packed snow.

SECTION II. INTRODUCTION
NOTE: This is a 4:30 block of instruction

Motivator: The main advantage of skijoring is that soldiers expend minimal energy while being towed as opposed to the often arduous tasks of cross-country skiing or snowshoeing. You and your Soldiers will be better rested and ready for follow-on missions once they arrive at their destination. Heavy rucksacks, crew-served weapons systems, and ahkio groups may be loaded on tow vehicles while troops skijor with minimal gear (LBE/LBV, Kevlar helmet, and weapon). Furthermore, skijoring may allow light forces to keep pace with mechanized or armored units without the extensive use of additional transportation assets.

Terminal Learning Objective

ACTION	Move over snow by skijoring
CONDITION	In a snow covered environment, given a SUSV or snow machine(s), two 50m static ropes, the military ski, NATO bindings, ski poles and vapor barrier boots (or other appropriate ski equipment as prescribed by unit), ECWCS, other issued cold weather clothing items, ballistic helmet, goggles, LCE with 2 quarts of water, and weapon
STANDARD	Move over the designated course by skijoring.

Safety Requirements: All exposed skin will be covered, goggles must be worn and a lookout must be posted on the tow vehicle, and vehicle speed will not exceed 15 MPH.

Risk Assessment: Medium (Reference USARAK Pamphlet 385-4)

Environmental Considerations: None

Evaluation: You will observe a demonstration and then you are expected to skijor behind a snow machine or SUSV. Your instructor may determine that you have not attained a skiing skill level that will allow you to safely conduct this exercise. You will also be tested on your knowledge of skijoring movements during a one hour written examination at the conclusion of the course (Refer to training schedule for date/time of exam). You must score a 70% on the written exam. If you fail the written exam, you will be given a second exam after re-training has been conducted. If you fail this second examination, you will be dismissed from the course.

Instructional Lead-In: This lesson will give you an opportunity to skijor behind a SUSV and/or a snow machine.

SECTION III. PRESENTATION

Learning Step/Activity 1 - Prepare skijor rigging for the SUSV.

a. Connect two ropes 120 to 150 feet long to the rear of the tow vehicle. Stow rucksacks inside the tow vehicle.

b. Sling weapons over the shoulder with the muzzle to the outside of the column.

c. Space skiers, in column of twos, at equal intervals behind the vehicle, to the outside of the ropes. Maintain a gap of approximately ten to twelve feet between individuals.

d. Half-hitch the rope around the ski pole shafts just below the handles. Hold the poles under the outside arm. Rest against the baskets of the ski poles.

e. Tie a small fixed loop in the end of each rope. The last soldier on each rope inserts the shafts of both ski poles halfway through the loop. Grasp the poles on each side of the loop, in a manner similar to water-skiing.

f. Post a lookout in the SUSV facing the rear of the tow vehicle. Establish communication with the driver.

g. Cover all exposed skin and wear goggles.

CAUTION: Skiers are never allowed to fasten themselves directly to the rope. In case of a fall they must be able to immediately release the rope, to avoid serious injury. If a soldier falls, the skiers immediately behind the fallen skier must be able to release the rope so that they can maneuver to avoid the fallen skier.

Learning Step/Activity 2 - Move over snow by skijoring.

a. The vehicle operator:

(1) starts and stops gradually.

(2) follows the easiest route that the terrain permits.

(3) does not exceed 15 MPH.

(4) Avoids steep slopes, obstacles, and sharp turns. Whenever these cannot be avoided, reduces speed to allow the skiers to negotiate the obstacle.

b. The lookout advises the driver when to speed up, slow down, or stop.

c. Personnel skijoring:

(1) When the vehicle begins to move, shuffle your feet forward a few steps. Gradually lean back and place your weight onto the tow rope. Failure to do so will most likely result in the skier being jerked forward abruptly enough to cause a fall.

(2) Once under way, lean slightly backward. Keep your upper body generally erect, with the knees slightly flexed, to act as shock absorbers. The skis may be in a slightly wider than normal stance, and one ski should be slightly advanced. This will increase your stability, as well as your ability to compensate for irregularities in the terrain and the vehicles' rate of movement. You should be able to relax, but you must remain alert for obstacles.

(3) If a sharp turn is necessary, speed is reduced to a walk. You can walk/shuffle around the corner. Do not drop or step on the tow rope. Once the last skier has completed the turn, speed is gradually resumed.

(4) When descending hills, keep the rope taut by using a braking wedge. If you find that you are unable to control the rate of descent, and collision with the vehicle is imminent, drop the rope and maneuver to avoid the vehicle. On short downward slopes the vehicle should temporarily increase speed so that you do not need to brake. On longer steep slopes, you should descend independently of the vehicle and regain the rope at the bottom of the hill.

(5) If you fall, release the rope and roll to the outside of the column to avoid being run over by the next soldier on the rope.

NOTE: Students that have had a minimum of 40 hours of ski training and have demonstrated a reasonable proficiency on skis (as determined by NCOIC and instructor consensus) will have the opportunity to skijor.

NOTE: Using the techniques described above students will execute a skijoring exercise on the trails surround the Black Rapids Training Site. All Risk Management procedures will be followed IAW the USARAK Pamphlet 385-4 Risk Management Guide for Cold Weather Operations.

SECTION IV. SUMMARY

You now have practical experience skijoring. You can use this technique to move Soldiers efficiently provided they are proficient skiers.

Check on Learning.

1. What is maximum speed of the tow vehicle?
 Answer - 15 MPH.

2. How do soldiers hold the rope?
Answer - The rope is half-hitched around the ski poles just below the handle.

Appendix A: Cold Weather and Mountain Equipment

It can be frustrating to order equipment for your unit for cold weather/mountain operations. Much of the equipment is either not in the Army inventory or has been discontinued from the inventory. It is often up to units to research and procure equipment. This is a brief information paper that consolidates equipment information along with POC information for ordering this equipment. We update this information twice each year. Prices change too frequently, so they are not listed. The commercial off-the-shelf gear (COT) gear we have listed here is tested and works in very rough conditions. By no means is it the only option. Most of the COT providers offer a significant government discount. If you have specific needs that are not listed here, contact us and we can make equipment and source recommendations. www.wainwright.army.mil/nwtc/

1. Ahkio Group: There is no standard for ahkio group contents. The ahkio sled is no longer manufactured. In all likelihood, units will not tow this sled for long distances in training or actual operations. But it is still one of the most effective methods for managing the tent and stove for a squad sized element and is the main reason we still provide instruction on it. It makes accountability simple and packages everything a squad needs for easy transport. The sled is still available through surplus stores. IMF can repair the sled and fabricate the cover for the sled.

ITEM	#	NSN or ordering information
Scow-sled, 200 lbs. capacity (ahkio)	**1**	**8920-00-273-8211**
Tent 10-man Arctic, complete with pole board	**1**	**8340-00-262-3684**
Pole Board	**1**	**Cut a 1'x1' piece of plywood. Cut a second 5"x5" piece of plywood. Bore a hole that is slightly larger than the tent pole diameter into the center of the 5"x5" piece and glue it to the center of the 1'x1' piece.**
Door Poles	**2**	**Cut two 6 foot poles that are 2-3 inches in diameter**
Space Heater Arctic (SHA)	**1**	**4520-01-444-2375**
Stove board	**1**	**Cut a piece of plywood 3' x 2', rip it lengthwise in half, cover top side with galvanized sheet steel and re-join the two pieces with hinges. This allows you to fold it in half for storage.**
Five gallon fuel can	**1**	**7240-01-337-5268**
Five gallon water can	**1**	**7240-00-089-3827**
D-handle coal shovels	**2**	**5120-00-188-8446**
Machetes (with sheath)	**2**	**5110-08-13-1286**
Squad cook sets	**2**	**7630-00-272-2485**
Squad stoves	**2**	**NWTC uses the MSR Whisperlite Internationale OR the MSR XGK-EX (this stove can be fitted with a jet that burns JP-8) Contact MSR www.msrgear.com**
Fuel bottles	**2**	**Order from MSR**
Bow saw	**1**	**5110-00-340-3276**
Ax	**1**	**5110-01-416-7827**
Hammers 2 lb.	**2**	**5120-00-203-4656**
50 or 60m static rope OR Army 120' Greenline	**1**	**4020-01-526-6234 (NWTC uses Blue Water Ropes/ contact APEXX 404-551-4913 or www.apexxsales.com)**
Trace, ahkio pulling, 9 ft	**3**	**Cut from static rope (you can buy in spools and cut)**
Tow Rope 27 feet	**1**	**Cut from static rope**
Harnesses, Man's, Sled (ahkio towing)	**4**	**8465-00-255-8413**
Aluminum oval carabiners (used for towing and rescue systems)	**8**	**NWTC uses Omega Pacific Ovals / contact APEXX 404-551-4913 or www.apexxsales.com**
Aluminum Locking Pear Shaped Carabiners (used for rescue systems)	**2**	**NWTC uses Tactical Jake HMS Screw Lok / contact APEXX 404-551-4913 or www.apexxsales.com**
25' 1 inch tubular nylon webbing (used for rescue systems)	**1**	**NWTC uses climb spec webbing / contact APEXX 404-551-4913 or www.apexxsales.com**
6' 7mm cordelette	**2**	**NWTC uses Blue Water 7mm accessory cord / contact APEXX 404-551-4913 or www.apexxsales.com**
Fire extinguisher	**1**	**4210-00-165-4703**
Lantern, gasoline*, with case	**1**	**NWTC utilizes a Coleman Brand White Gas Lantern**

Recommended Repair Items

ITEM	NSN
CLIP, LINER	**8340-00-242-7872**
CLOTH, DUCK, 5 YARDS (Ahkio Cover)	**8305-00-926-6171**
D-RING, ONE INCH BRASS	**5390-00-260-1414**
LINER, TENT	**8340-00-262-3698**
PEAK PLATE	**8340-00-965-4432**
PIN, TENT, STEEL	**8340-00-823-7451**
POLE, TENT	**8340-00-188-8413**
SLIP, TENT LINE	**8340-00-205-2759**

TENT LINE, 12' 6"	**8340-00-262-3658**
TENT LINE, 19'	**8340-00-262-6911**

2. Snowshoes. For most units, snowshoes are the way to go. The old military magnesium snowshoe works, but is not available through the Army inventory. You can still get them from military surplus outfits, but the bindings are more difficult to come by.

We highly recommend the Mountain Safety Research (MSR) Denali Snowshoe. Ask for the military version. It is black and grey and comes standard with 8 inch flotation tails. Do not purchase the 4 inch flotation tail. Contact MSR at www.msrgear.com . This is the same company that makes the squad stoves listed for the ahkio group. They also make an adjustable ski pole.

3. Skis. We recommend a single camber, metal edged, waxable ski. This allows travel in nearly any snow covered environment. Waxless skis work well in some environments and very poorly in others.

There are three NSN military skis made by ASNES. They have a significant camber to them and are wide enough for heavily loaded military skiers. They are great for cross country movements but are harder to ski in more difficult backcountry terrain. They can be ordered through Asnes direct www.asnes.com . The NWTC is working with ASNES to produce a better NATO ski.

Karhu has also designed skis for the military. The Marine Corps is testing a ski made by Karhu. It is a very short, very fat ski with a waxless base and a simple snowboard style binding. We do not have experience with this ski but are planning to test it this winter. Contact the Marine Corps Mountain Warfare Training Center for more information http://www.mwtc.usmc.mil/index.htm .

4. The NATO 120 Ski Binding has been discontinued as of 2009. They were made by Rottefella. They are simple to use, easy to mount and fit any military boot. They may be found in various surplus stores. NWTC is working to procure a new universal binding system.

5. Ski Poles. We recommend any of the Black Diamond Equipment Flick Lock poles. They are collapsible and the flick-lock mechanism is difficult to break and easy to adjust/repair. Other ski poles use an internal camming device that is difficult to adjust or repair. www.bdel.com

6. Ropes, Webbing, Cordage, Harnesses, Carabiners and other specialty mountaineering gear can be ordered from Appex Sales. This is a veteran owned company. The staff understands military needs and can help you get what you need for military mountaineering. They also supply FAST and SPIES ropes. www.apexxsales.com **.** Black Diamond Equipment www.bdel.com also supplies quality equipment and has significant discounts for government purchasers. We buy our rope, cordage and webbing from Appex Sales (military colors from Blue Water ropes) and our most of our carabiners, harnesses and other hardware from Black Diamond (cheaper and better quality/durability).

7. Tents and Army Approved Heaters. Hunter Manufacturing makes most of the Army Approved Heaters in the Army inventory. Below are the different types of heaters available and the tents/shelters that they work with. We use the SHA and the 10-man arctic tent. The ten-man tent is still the simplest, cheapest shelter available; combined with the SHA is hard to beat.

Hunter Manufacturing Company
30525 Aurora Rd
Solon, OH 44139
sales@huntermfgco.com
www.huntermfgco.com

Heater Models and Applications

Item	Description	Item	Description
	Space Heater Small **4520-01-478-9207** 16”L x 9” W x 14” H 32 Lbs. 12,000 BTU/Hr		**UH68ODH** **PN 168325** 30”L x 11” W x 24” H 125 Lbs. 60,000 BTU/Hr 110 VAC, 450 Watts
	Space Heater Arctic **4520-01-444-2375** 17”L x 9” W x 17” H 41 Lbs. 25,000 BTU/Hr		**Large Capacity Field Heater** **4520-01-500-1534** 62”L x 40”H x 44.5W 622 Lbs. 400,000 BTU/Hr Self-Powered, Diesel Engine
	H45 Space Heater **4520-01-329-3451** 18” Dia x 24” H 65 Lbs. 45,000 BTU/Hr		**MTH150** **PN 15000** 56”Lx26”Wx31”H 200Lbs 120,000 BTU/Hr 110 VAC, 12 Amps
	Space Heater Convective (SHC35) **4520-01-431-8927** 40”L x 14” W x 18” H 74 Lbs. 35,000 BTU/Hr Self-Powered		**MTH150CP** **PN 15000-1** 56”Lx26”Wx31”H 200Lbs 120,000 BTU/Hr 110 VAC, 12 Amps CBRN Ready
	Space Heater Convective (SHC60) **4520-01-520-6477** 44 ¾ ”x 17”x19” 98Lbs. 60,000 BTU/Hr Self-Powered		**MV60S-1** **PN 53457-1** 51”Lx16.5”Wx25”H 115Lbs 60,000 BTU/Hr 110VAC, 4.75Amps
	UH68G1 **Space Heater** **4520-01-203-4410** 26”L x 22”H x 10W. 110 Lbs 60,000 BTU/Hr 110 VAC, 450 Watts		**A20, Space Heater** **4250-01-396-2826** 27”L x 8” Dia. 38 Lbs. 60,000 BTU/Hr 24 VDC, 20 amps

See applications on the other side.

Application	SCT	5 and 10 man Arctic	GP Small	GP Medium	305	MCPS	SSS	TEMPER Tent	MGPTS Small	MGPTS Medium
Space Heater Small	X									
Space Heater Arctic		X								
H45				X2	X	X2	X2	X2	X	
SHC 35			X	X2	X	X	X2	X2	X	
SHC 60			X	X	X	X	X	X	X	
UH68ODH			X	X	X	X	X	X	X	
MV60S-1			X	X	X	X	X	X	X	
MTH150							X	X		X
MTH150CP							X	X		X

Application	MGPTS Large	MSS	LME	6D31 Dome	**CBRN**	LME	Expansible Van Body	Hard Wall Shelter	Cargo	Vehicle
LCFH	X	X	X	X		X				
MTH150CP	X	X	X	X	X					
A20 / CBH					X			X	X	X
UH68G1							X	X	X	

ABBV.	**DESC.**	**Floor Dim./Sq. Ft.**
SCT	Soldier Crew Tent	10’x10’ 120 sq. ft
10 Man Arctic	10 Man Arctic	8’9’’ Octagon 200 sq. ft
MCPS	Modular Command Post System	11’x11’ 121 sq. ft
MGPTS Medium	Modular General Purpose Tent System	36’x18’ 648
GP Medium	Tent, General Purpose, Medium	32’x16’ 512 sq. ft
SSS	Small Shelter System	20’x32’ 650 sq. ft
MSS	Medium Shelter System	52’x 29.5’ 1500 sq. ft
LME	Lightweight Maintenance Enclosure	32’x25’ 800
TEMPER	Tent, Extendable Modular Personnel	32x20’ 640 sq. ft
305	Base-X Expeditionary Shelter	18’ x 25 450 sq. ft.
6D31 Dome	Base-X Expeditionary Shelter, (TOC, UOC)	27’ x 31’ 615 sq. ft.