ENVIRONMENTAL REMEDIATION SERVICES UNRESTRICTED

FORMER COMMUNICATIONS SITE ACTIVE SUB-SLAB DEPRESSURIZATION PILOT TEST WORK PLAN

TAKU GARDENS
FORT WAINWRIGHT, ALASKA

DECEMBER 2010

JACOBS ENGINEERING GROUP INC.

FORMER COMMUNICATIONS SITE ACTIVE SUB-SLAB DEPRESSURIZATION PILOT TEST WORK PLAN

TAKU GARDENS
FORT WAINWRIGHT, ALASKA

DECEMBER 2010

Prepared for:
U.S. Army Corps of Engineers
P.O. Box 6898
JBER, Alaska 99506-0898

Prepared by:
Jacobs Engineering Group Inc.
4300 B Street, Suite 600
Anchorage, Alaska 99503

Environmental Remediation Services
Contract No. W911KB-06-D-0006
Task Order No. 07

TABLE OF CONTENTS

SECTION **PAGE**

ACRONYMS AND ABBREVIATIONS iii

1.0 INTRODUCTION 1-1

1.1 SITE WIDE HISTORY 1-1

1.2 PROBLEM STATEMENT 1-2

2.0 SUB-SLAB DEPRESSURIZATION PRINCIPLES 2-1

3.0 TEST LOCATIONS 3-1

3.1 ENVIRONMENTAL FACTORS 3-1

3.2 SYSTEM CONFIGURATION 3-1

3.3 LOCATION SELECTION 3-2

4.0 DIAGNOSTIC TESTING 4-1

4.1 DIAGNOSTIC TESTING PROCEDURES 4-1

4.1.1 Instrumentation and Measurement 4-1

4.1.2 External Pressure Differentials 4-3

4.1.3 Building Specific Internal Pressure Differentials 4-3

4.1.4 Suction and Test Hole Location 4-4

4.1.5 Installation and Execution 4-4

4.2 VENTILATION TESTING 4-7

4.2.1 System Construction Components 4-7

4.2.2 Test Execution 4-8

5.0 SCHEDULE 5-1

6.0 REPORTING 6-1

7.0 REFERENCES 7-1

TABLES

Table 3-1 Pilot Test Duplexes 3-3

Table 4-1 Parameters to be Measured 4-3

Table 4-2 Measurement Time Schedule: Baseline Testing 4-6

Table 4-3 Measurement Time Schedule: Pilot Testing 4-10

TABLE OF CONTENTS

APPENDICES

APPENDIX A: Figures and Floor Plans

APPENDIX B: Equations and Calculations

APPENDIX C: Data Recording Sheets

ACRONYMS AND ABBREVIATIONS

ADEC	Alaska Department of Environmental Conservation
bgs	below ground surface
cfm	cubic feet per minute
cms^{-1}	centimeters per second
COC	contaminant of concern
DMM	Discarded Military Munitions
ECD	electron capture device
EPA	U.S. Environmental Protection Agency
FCS	former communication site
FDA	U.S. Food and Drug Administration
HTH	calcium hypochlorite
HVAC	heating, ventilation and air conditioning
ITRC	Interstate Technology Research Council
NOAA	National Oceanic and Atmospheric Administration
Pa	Pascal
PACM	potential asbestos-containing material
PAH	polyaromatic hydrocarbon
PCB	polychlorinated biphenyls
PCE	tetrachloroethylene
PID	photoionization detector
PVC	polyvinyl chloride
SF_6	sulfur hexafluoride
SFH	single-family home
SSD	sub-slab depressurization
SVOC	semi-volatile organic compound
TCE	trichloroethylene
TCP	1,2,3-trichloropropane
USAED	U.S. Army Engineer District, Alaska
VOC	volatile organic compound

(intentionally blank)

1.0 INTRODUCTION

Fort Wainwright currently occupies a 1,577,095-acre military installation west of Fairbanks, Alaska. The main cantonment area is 13,700 acres. Fort Wainwright is located adjacent to the city of Fairbanks, which is located in Interior Alaska approximately 350 miles north of Anchorage. Both the Parks and Richardson Highways provide transportation between Anchorage and Fairbanks. The Former Communications Site (FCS) is a 54-acre site located between Alder and Neely Roads, east of White Street and west of the Fort Wainwright Power Plant (Figure A-1).

1.1 SITE WIDE HISTORY

The U.S. military has occupied the general area of Fort Wainwright for over 60 years, and during that time a wide variety of land uses occurred in various areas of the FCS. Between the late 1940s and late 1950s, the site consisted of troop billets and battalion and wing-level operations. Base disposal and salvage operations occurred in a portion of the site, some of which is likely to be associated with dumping into a loop of an historic river channel that ran through the site. Military items associated with both the U.S. Army and U.S. Air Force are likely to have been deposited during this period. Troop billets, built for the arrival of the 3rd Battalion, 4th Infantry Regiment, also occupied a portion of the site from 1951 to 1956. A motor pool associated with the regiment was located onsite during this period.

In winter 2005/2006, a review of construction field notes, photographs, and historical site uses led to a determination by U.S. Army, U.S. Environmental Protection Agency (EPA), and the Alaska Department of Environmental Conservation (ADEC) that a site-wide investigation was required to fully determine the nature and extent of contamination. A detailed history of environmental activities since that determination is provided in the *Draft Final Remedial Investigation: Former Communications Site* (USAED 2010c), *Draft Feasibility Study: Former Communications Site* (USAED 2010b) and *2007/2008/2009 Former Communications Site Drum and Debris and PCB Investigation Report* (USAED 2010a).

The FCS is currently occupied by 55 duplex properties, and is enclosed by chain-link fencing on all sides. To date, none of the duplexes have been occupied. Figure A-1 shows the project location, and Figure A-2 presents a plan view of Taku Gardens.

1.2 PROBLEM STATEMENT

Geophysical surveys conducted at Taku Gardens before and after construction of the duplexes and visual inspection during Remedial Investigation activities indicated residual metal debris extending under the slabs of several duplexes on site. This is consistent with the results of the Remedial Investigation through which a total of 1,058 drums were found; 8 of which contained a small amount of liquid that was sampled and analyzed. These analyses indicated that the drums held a mixture of fuel and water with few volatile organic compounds (VOCs) detected. Additionally one drum containing xylene was found south of Building 48 (USAED, 2010b). A remote possibility (less than 0.5 percent) exists that an intact drum containing residual volatile compounds could corrode over time and release vapors into the soil beneath an existing duplex.

In undeveloped areas, subsurface vapor-phase contaminants migrate towards the ground surface and into the ambient air and thus do not present a concern. The presence of a building, however, can provide an alternative advective or diffusive "sink" for these vapors to migrate into. During the winter months the exterior ground is frozen thus increasing the tendency of vapor phase contaminants to migrate under building footprints, from high pressure (frozen ground) to low pressure (aggregate in a building foundation). Under-pressurization within a home (relative to the ambient atmosphere) can create a negative pressure differential between the building's inside air (lower pressure) and the surrounding soil (higher pressure), and induce the transport of contaminated vapors toward and into the structure. If this were to occur, vapors could permeate through the foundation slab of the housing units, where they could come in contact (via inhalation) with building occupants.

A pilot test utilizing sub-slab depressurization (SSD) systems will be conducted to evaluate the effect proactive, mitigative measures could have to prevent vapors from entering the houses. Installation of a proactive SSD system in each test unit has been selected for evaluation because

of its ability to remove sub-slab vapors prior to entering the living space, and its cost effectiveness. A typical schematic of an SSD system is depicted in Detail 2, Figure A-10. Available data indicates that operation of an SSD system will create and maintain a negative pressure under the building, thus preventing any volatile compounds, should they exist, from entering the building envelope via vapor intrusion. The SSD system will address the worst-case scenario in which an intact drum corrodes at some future point and releases volatile vapors into the soil beneath a home.

The objective of this pilot test is to determine the effectiveness of using an SSD system to proactively prevent the possible migration of vapors into the housing units at the FCS, should it ever become necessary. The pilot test will gather quantitative and qualitative information and data to support the design of an appropriate SSD system that can be proactively installed in all of the duplexes on the FCS. This document provides a technical approach for gathering the information necessary to meet these objectives.

(intentionally blank)

2.0 SUB-SLAB DEPRESSURIZATION PRINCIPLES

This section is based on the U.S. EPA *Technical Guidance (Third Edition) for Active Soil Depressurization Systems* (EPA 1993) and the Interstate Technology Regulatory Council (ITRC) *Technical and Regulatory Guidance- Vapor Intrusion Pathway: A Practical Guidance* (ITRC 2007).

The general principle of a SSD system is to keep volatile compounds that may be present in soil gas away from the foundation before it can enter the home. It works by creating a pressure differential between the building envelope and the sub-slab environment. Active SSD involves inserting one or more suction pipes into the aggregate or soil beneath a concrete slab (either vertically down through the slab from the space above, or horizontally through a foundation wall below slab level from outdoors). Suction is created in these pipes using a fan and then vented outdoors through the roof of the house. A typical schematic of the system is presented in Figure A-10.

The feasibility of the installation and effectiveness of a SSD system to prevent vapor intrusion in all of the Taku Gardens duplexes will be based on the data that will be collected. ITRC guidance states that if the system maintains a vacuum of at least 4.0 Pascal (Pa), the slab can be considered fully depressurized and would not allow vapor intrusion (ITRC 2007). In addition to monitoring pressure, a tracer gas will be introduced sub-slab in the second phase of testing and concentrations will be monitored to demonstrate the system's ability to remove sub-slab gases. If the system maintains at least 4.0 Pa of vacuum during the winter and summer testing periods and the tracer test shows a significant decrease in sulfur hexafluoride (SF_6) concentrations during both periods, the system will be considered effective.

(intentionally blank)

3.0 TEST LOCATIONS

The SSD system design approach utilizes guidance from the EPA and ITRC on installing and testing SSD systems, and predicts how this guidance will affect implementation and operations at the Taku Gardens FCS. Thorough research of work previously completed on the site took place in order to determine which environmental factors might be encountered, and which duplexes would be best suited for installation of the pilot test systems. To meet these objectives, four "worst-case" duplexes were chosen for this testing program, which will include installing and testing two different system configurations. A discussion of the environmental factors, the proposed systems, and information about these duplexes is presented below.

3.1 ENVIRONMENTAL FACTORS

Shallow foundations were constructed under the duplexes with a non-frost susceptible grade aggregate backfill at an average thickness of 4 feet; however, variability in backfill depth can be observed from 2 feet to 8 feet below ground surface (bgs). Non-frost susceptible aggregates are soils free of fines (> 0.075 millimeters). This gives the aggregate a tendency to demonstrate high levels of hydraulic conductivity. Soil where aggregate foundations were not constructed consists of two primary lithographic units: an upper silty layer and a lower gravely layer. The upper silt-containing layer ranges from sandy-silt to silty-sand; and the lower layer consists of moderately-graded to well-graded gravel. Soil borings have shown the interface of the two layers to be located at 8 to 16 feet bgs. The hydraulic conductivity in the area should range between 10^{-1}-10^{-3} centimeters per seconds (cms^{-1}) in the lower unit and 10^{-3}-10^{-6} cms^{-1} in the upper unit.

3.2 SYSTEM CONFIGURATION

For this pilot test, two different configurations of the SSD system will be installed in the duplexes. System effectiveness will be evaluated to determine which configuration can be installed on the remainder of duplexes. The system components and layout consist of the following:

- Configuration A - Configuration A will feature one main suction point in each duplex. The suction point will be placed in a central location between the single family homes (SFH) in order to ensure that the slab of the entire duplex is within the suction radius of influence (Figures A-4 and A-5).
- Configuration B - Configuration B will feature two main suction points in each duplex located in the garage/mud room of each SFH. Suction points and soil vents will run from a remote corner of the garage slab to the roof (Figures A-6 and A-7).

To determine which system is most effective, Configuration A will be installed in Duplexes 1 and 17 and Configuration B will be installed in Duplexes 24 and 48.

3.3 LOCATION SELECTION

Duplexes for this pilot study were chosen to house the systems based on observations of metal debris extending under the duplex, proximity to previously removed debris, and the size of the duplex footprint. The environmental history of the FCS and the duplexes chosen for this study are detailed in the *Draft Feasibility Study* (USAED 2010b). A plan view of the FCS Duplexes along with chosen duplexes is presented in Figure A-2. Rationale for each duplex selection is presented below:

Duplex #1 is comprised of a single-story SFH and a 2-story SFH (Figure A-4). The footprint for this configuration is the largest on Taku Gardens (5,100 square feet) and will therefore be a good indicator as to whether SSD Configuration A will work for smaller homes. Successful testing of Configuration A on the largest footprint on Taku Gardens will indicate that a single system will work for all duplexes since all other footprints will be less area for the vacuum to cover. Duplex #1 was chosen for pilot testing based on its proximity to previous investigations of scrap metal, and the size of the footprint. No debris has been observed under Duplex #1.

Duplexes #17, #24, and #48 are comprised of two 2-story SFHs (Figures A-5, A-6, and A-7, respectively). This configuration provides an average footprint for most of the FCS duplexes (3,600 square feet). These duplexes were chosen for pilot testing based on their average footprint and observations of metal debris extending beneath the slabs. Additionally, conducting the pilot

test in identical duplexes will check for consistency between the systems. A summary of the duplexes to be used in the pilot test is presented below (Table 3-1).

The floor plans and elevation views of the two types of duplexes to be used in the test are located in Figure A-3.

Table 3-1 Pilot Test Duplexes

Duplex #	Basic Layout	Footprint Size (ft^2)	Pilot Test System	Remaining Debris under slab
1	One single-story SFH and one 2-story SFH	5,100	Configuration A	Suspected
17	Two 2-story SFHs	3,600	Configuration A	Yes- visually identified during previous excavations
24	Two 2-story SFHs	3,600	Configuration B + Overlap Measurements	Yes- visually identified during previous excavations
48	Two 2-story SFHs	3,600	Configuration B	Yes- visually identified during previous excavations

(intentionally blank)

4.0 DIAGNOSTIC TESTING

The pilot scale test will be conducted in two phases. The first phase entails diagnostic pressure testing to evaluate which fan speed will create an adequate pressure differential under the entire duplex. The second phase entails using a tracer gas to qualitatively establish the efficiency of the SSD systems. To ensure that the system will work in any season in Fairbanks, the second phase of testing utilizing tracer gas will be repeated in the summer. Diagnostic pressure testing will take place in order to calculate the radius of influence created by the systems under the slabs of each duplex. This will ensure that the pressure difference is large enough at remote corners of the slab.

4.1 DIAGNOSTIC TESTING PROCEDURES

Diagnostic pressure testing will take place in order to calculate the radius of influence created by the suction of the fan under the slabs of each duplex. This will ensure that an adequate pressure differential is present to prevent the migration of vapors at remote corners of the slab. The diagnostic testing presented in this section will be conducted prior to the second phase of the pilot scale study, which entails measuring the system's ability to capture and remove vapors from below the buildings.

The diagnostic testing phase will entail evaluating the sub-slab pressure differential under multiple conditions including current conditions within and outside of the duplex and conditions when the SSD system is running. Procedures for creating these conditions and data collection methods are presented below.

4.1.1 Instrumentation and Measurement

Measurements will be taken throughout the diagnostic and pilot testing phases. These include concentrations of volatile compounds, pressure within the duplexes and temperature, wind speed, and barometric pressure on Fort Wainwright utilizing the following systems.

A RAE systems®, or equivalent, photoionization detector (PID) will be used to measure volatile compounds. This will allow for monitoring of the breathing zone while holes are being drilled into the slab and measurements of VOCs within the holes.

A multi- function digital micromanometer will be used to measure the sub-slab pressure induced by the vacuum during both the diagnostic and pilot testing phases. Additionally the micromanometer can be used as a flow meter. The micromanometer will be attached to the suction pipe to measure the flow of air being drawn by the fan in cubic feet per minute (cfm). The micromanometer will have a sensitivity of a least 0.1 Pa (0.0001 in. H_2O).

A 70 to 110-watt inline centrifugal fan with variable speed control will be used in all systems. Additionally a larger fan will be kept on hand in the event that the initial fan does not provide enough vacuum to fully depressurize the slab.

Weather details, including barometric pressure, wind speed, and temperature, will be collected and included in the final report for each day the system is running. Data used will be collected and recorded by the National Oceanic and Atmospheric Administration (NOAA) at the Fort Wainwright U.S. Army Airfield. Measurements will be recorded and compared to sub-slab pressure to determine if substantial changes in sub-slab pressure occur due to variable weather factors. These measurements will also be compared to summer averages to ensure that the system was tested in the most challenging conditions.

Table 4-1
Parameters to be Measured

Parameter/Media	Method of Measurement	Suggested Frequency
Breathing Zone	PID and 4-gas meter	After drilling hole and prior to starting vacuum
Barometric Pressure	Data measured and recorded by NOAA at Fort Wainwright Airfield	Once an hour throughout the duration of diagnostic testing phase
Temperature	Data measured and recorded by NOAA at Fort Wainwright Airfield	Once an hour throughout the duration of diagnostic testing phase
Wind Speed	Data measured and recorded by NOAA at Fort Wainwright Airfield	Once an hour throughout the duration of diagnostic testing phase
Pressure at Test Holes	Digital Micromanometer	See Tables 4-2 and 4-3
Flow	Digital Micromanometer	See Tables 4-2 and 4-3
Fan Speed	Variable speed control	Check fan speed after each test
Distance to Test Hole	Measuring Tape	Once after initial drilling of hole

4.1.2 External Pressure Differentials

The existence of a seasonal frost layer tends to exacerbate vapor phase intrusion during winter months by temporarily eliminating the ground surface/ambient air transport pathway. To demonstrate this phenomenon, pressure will be measured in the ground outside of the duplexes and in the sub-slab during the test in the winter months and again in the summer. Temperature, barometric pressure, and sub-surface pressure measurements will be compared between seasons to ensure that this assumption was correct and the pilot test was conducted in the most challenging conditions.

4.1.3 Building Specific Internal Pressure Differentials

Baseline pressure testing will take place in order to calculate the radius of influence created by the suction of the fan under the slabs of each house. Suction radius of influence measurements involve the generation of a suction field under the slab prior to installation of the mitigation system, and then measurement of the suction field at test holes remote from the suction point. This will ensure that the pressure differential is large enough at remote corners of the slab.

4.1.4 Suction and Test Hole Location

Suction and test-hole locations will be determined by a variety of factors such as:

- Radius of influence measurement
- Utility lines
- Accessibility
- Location in living space
- Aesthetics of finished houses
- Structural design of the house

Suction holes for Configuration B will be placed in the mud room of each SFH. Suction holes for Configuration A will be placed against the party wall in Duplex #17 and in a closet near the front door of the single floor SFH in Duplex #1.

Remote test holes will be placed stepping out from the suction hole at 10, 20, 30, and 40 feet. Additionally, one remote test hole will be placed on either side of the party wall in Duplexes #1, #17, and #24 to determine the effect the footing of the party wall has on the radius of influence (Detail 1, Figure A-10). Accurate measurement of the radius of influence will ensure that the suction field covers the entire slab.

Suction and test holes will be drilled in the same location for similar floor plans in order to ensure quality of measurements. This will also allow for determination of the effect of variability in the sub-slab grade. An attempt will be made to locate all suction and tests holes in a closet or another unfinished area in order to cause as little disturbance to the housing interior as possible.

4.1.5 Installation and Execution

The following presents the steps to be taken when conducting the baseline suction radius of influence test. This procedure is also summarized in Table 4-2 below.

1) Suction and remote test hole locations will be chosen based on the criteria presented in Section 4.2.1. Complete floor plans with suction holes, test holes, and approximate radii of influence are presented in Figures A-4 through A-7.

2) The suction during the diagnostic testing phase will be created by using the fan that will be used in the final system unless otherwise determined by initial testing.

3) Holes will be drilled at the selected sites. Care will be taken to drill only into the slab and not below. Drilling deeper than the slab would create a preferential pathway for soil gas and suction, therefore making the test inaccurate. To ensure smooth edges of the cut and for ease of sealing, a coring drill will be used to drill all holes. Remote testing holes will measure ¼ inch to ½ inch in diameter. The suction hole will measure 6 inches in diameter.

4) A vapor collection void under the suction point will be dug to create a preferential pathway for vapors to be collected within the stack and vented through the roof of the house. The approximate size of the collection void will be 12 inches in diameter and 10 inches deep, totaling approximately 1 cubic foot of grade to be removed. Materials removed from the void will be logged in order to determine the nature of the soil beneath the slab. All voids will be dug manually in order to keep the core size in the slab to a minimum.

5) Piping for the test system will be inserted into the suction point. The section of pipe extending approximately 12 inches into the sub-slab void will be perforated in order to provide the most surface area for vapor collection. The pipe will then be carefully sealed in the hole using rope caulk or something similar to prevent possible air leakage (Detail 1, Figure A-9). At all remote test holes, a sampling tube will be inserted and sealed. Sampling tubes will reach into the porous material beneath the slab, taking care to not block the tube. A digital micromanometer will be attached to one hole's sampling tube and all others will be closed temporarily. Next, a baseline pressure reading will be taken while all exhaust appliances in the house are operating. The opening and closing of remote test holes will continue until baseline pressure has been taken at all locations.

6) Baseline measurements are an important measurement in evaluating the effectiveness of the system. These measurements will help determine if the system size should be changed from the original plan due to existing sub-slab depressurization. These measurements will also give an initial measurement to be compared with the pressure measurements when the system is fully operational.

7) With sampling tubes crimped closed at other test holes, a micromanometer will be attached to each hole in turn throughout the SFH. Failure to effectively seal and crimp this penetration could partially neutralize the sub-slab suction, significantly affecting measurements and results. Measurements will be taken every 10 minutes starting with the test hole closest to the suction point. A summary of time for measurements is presented in Table 4-2.

8) If pressure measurements are at least 6.0 Pa at the farthest hole, the fan will be turned down and pressure will be measured again. Measurements will continue until pressure at the farthest hole is less than 6.0 Pa, at which time step five will be repeated to create a second pressure gradient model. According to EPA and IRTC guidance, 4.0 Pa is a conservative minimum sub-slab pressure difference to maintain in order to prevent vapor intrusion in a house. This pressure difference eliminates the main drivers that create vapor intrusion

pathways. In most cases, once this pressure difference is maintained, no further vapor intrusion is observed (EPA 1993).

9) When measurements are complete, the test holes will be permanently filled with self-leveling grout leaving only the hole farthest from the suction point unchanged.

Table 4-2
Measurement Time Schedule: Baseline Testing

Measurement Type	Time	Total number of Measurements
Diagnostic Testing		
Pressure	One baseline measurement and subsequent measurements every 10 minutes for 60 minutes *	7
Flow	One baseline measurement and subsequent measurements every 10 minutes for 60 minutes to be read in conjunction with pressure *	7

Note: * To be repeated at each remote test hole.

Overlap Measurements

Additional pressure measurements will be collected in Duplex #24 to determine how much overlap can be expected when two systems are running simultaneously in one duplex. In order to test this, the systems must be run one at a time and then simultaneously while pressure is measured throughout the duplex. These additional tests will aid in the determination of whether two smaller fans should be used or one large one. It will also help to determine the most cost-effective way to install the final system. Findings and conclusions will be discussed in the Final Report.

Methodology for this portion of the pressure testing is presented below. Figure A-8 depicts potential areas of influence and overlap.

1) Baseline measurements will be taken throughout the entire duplex as described above in step #4.

2) Once baseline measurements are recorded, the system on the east side of the building will be turned on with maximum power.

3) With sampling tubes crimped closed at other test holes, a micromanometer will be attached to each hole in turn throughout the duplex and pressure measurements recorded. Measurements will start with Remote Test Hole #4W. Pressure measurements will be recorded as the fan speed is turned down until the pressure is 6.0 Pa. This will be repeated at each remote test hole moving toward the east suction point.

4) Step two will then be repeated with only the west system running starting at Remote Test Hole #4E.

5) Once a blower curve and overlaps have been predicted for both sides of the duplex, the systems will be run simultaneously. Systems will be set at the lowest speed at which at least 6.0 Pa is maintained across the SFH. With both systems running, pressure at Remote Test Holes #5W and #5E will be monitored.

    a. It is suspected that the suction of the two systems will have an additive effect on the remote test holes. If this is determined to be true, pressure measurements will continue as described below. If no additive pressure effects are observed, then diagnostic pressure testing will be considered complete.

6) Starting with the east system, the fan speed will be decreased until the pressure of Remote Test Hole #5E reaches 6.0 Pa. Returning the east fan back to the original power, the west fan will be turned down in the same manner until test hole #5W is 6.0 Pa. Finally both fans will be turned back up to original power and lowered simultaneously until either #5E or #5W reaches 6.0 Pa.

    b. Although it is assumed that all other remote test holes will maintain the necessary pressure, Remote Test Holes #4W and #4E will be monitored to ensure that the pressure does not drop below 6.0 Pa once fan speeds have been determined.

7) Once an optimum fan speed has been determined, the diagnostic phase will be considered complete and the systems will be prepared for the pilot test.

4.2 VENTILATION TESTING

The second phase of the pilot scale testing will be conducted to ensure that sub-slab pressure is maintained and that the vapors can be captured from below the entire slab and vented out of the Taku Gardens duplexes. This phase of testing will be completed twice; once during the initial construction and testing phase and once in the summer.

4.2.1 System Construction Components

The fan speed determined to be appropriate for inducing an adequate pressure differential under each duplex, as well as the monitoring points installed for the diagnostic testing phase, will be

used when testing the ability of the system to remove and vent the vapors. The following construction and testing equipment preparation activities will occur before implementing the ventilation testing phase.

1) Piping: All pipes will be 4 inches in diameter and constructed with schedule-40 polyvinyl chloride (PVC). The section of pipe extending approximately 12 inches into the sub-slab void will be perforated in order to provide the most surface area for vapor collection.

2) Hole Backfill and Sealing: Once diagnostic measurements are complete, obsolete test holes will be permanently backfilled with self-leveling grout. Gaps in the suction hole and single sampling hole will be temporarily filled with caulk. Gaps between the PVC and slab will not be permanently filled until system is tested and approved by the appropriate parties.

3) Soil Vapor Vent: A soil vapor vent constructed of 4-inch schedule-40 PVC will run up from the suction point, connect to the fan near the ceiling of the first floor, and then exhaust via flex tubing through a nearby window. This exhaust system will be temporary until a determination has been made about the effectiveness of the system.

4) Fan: A 70- to 110-watt inline centrifugal fan with a variable speed remote will be used for the diagnostic and pilot testing phases. If initial pressure testing determines that a less or more powerful fan must be used, it will be installed prior to the pilot test. Additionally, a more powerful fan will be kept on hand in the event that pressure loss is greater than calculated.

5) Sample Valve: In addition to a standard SSD system, a small valve will be placed above the fan near the ceiling. This will be placed such that SF_6 can be monitored during the pilot test and so that samples of sub-slab gases may be easily taken in the future if the need arises.

All details listed above are depicted in Figure A-9. Systems will not be permanently constructed with roof vents, flue chases, or grout until the system has been proven and approved by the appropriate parties.

4.2.2 Test Execution

The following presents the steps to be taken when conducting the tracer gas ventilation test. This test will be conducted first in the winter and then again in the summer to ensure the system works properly in both seasons. This procedure is also summarized in Table 4-3 below.

Pressure Testing Phase

1. The fan will be installed in its final position during the first phase of testing. However, if the fan is moved, the pressure loss due to friction will be calculated based on final construction of the soil vapor vent. Calculations, variables, and equations are presented in Appendix B.
2. After all extraneous test holes and the gap between piping and slab are filled, the main test will begin. The test hole farthest from the suction point will remain open with a sampling tube sealed in place.
3. Pressure measurements at the test hole gauge will be taken prior to the full system start up and then again at 10 minutes, 1 hour, 24 hours, 72 hours and 168 hours (7 days) after the system has started. This will ensure the system is maintaining the appropriate sub-slab pressure. A schedule for measurements is presented in Table 4-3.
    a. If pressure is maintained, the tracer gas testing phase will commence.
    b. If pressure is not great enough to maintain the pressure differential necessary, the fan power will be increased and step 3 repeated.

Tracer Gas Testing Phase

1. The gas chromatograph with electron capture device (ECD) will be set up at the farthest test hole from the suction point and at the sample valve in the attic. Baseline measurements of existing SF_6 in the environment will be taken. This is expected to be zero, as SF_6 is a man-made compound.
2. 2,000 milliliters of SF_6 will be injected in the test hole.
3. Immediately following the injection of the tracer gas, the ECD will be attached to the sampling tube and the initial concentration of SF_6 will be measured.
4. With the active SSD system OFF, the ECD will be programmed to take readings every 30 minutes for 72 hours (three days). This will provide a baseline measurement for existing air exchange and chemical decomposition.
5. Once the baseline measurements have been taken, the holes will sit open to air for 7 days to allow for complete dissipation of remaining SF_6.
6. After 7 days, steps 1, 2, and 3 will be repeated.
7. With the active SSD system ON, the ECD will be programmed as in step 4 to determine the concentration of SF_6 over time with the system activated. In addition to measurements taken in step 4, measurements of SF_6 will simultaneously be collected from the sample valve located above the fan on the first floor. This will demonstrate that the SF_6 is being removed by the system and not by diffusion or some other naturally occurring process.

Table 4-3
Measurement Time Schedule: Pilot Testing

Measurement Type	Time	Total number of Measurements
Pilot Testing		
Pressure	One baseline measurement and subsequent measurements at 1 hour, 24 hours 72 hours, and 168 hours after system startup	5
Flow	One baseline measurement and subsequent measurements at 1 hour, 24 hours 72 hours, and 168 hours after system startup to be read in conjunction with pressure measurements	5
Sulfur Hexafluoride (Active system OFF)	One baseline measurement prior to injection, one baseline post injection and subsequent measurements every 30 minutes for 72 hours**.	144
Sulfur Hexafluoride (Active system ON)	One baseline measurement prior to injection, one baseline post injection and subsequent measurements every 30 minutes for 72 hours**. Measurements will be taken at two locations.	288

Notes:
*To be repeated at each remote test hole
**System does not need to be monitored at all times; measurements will be recorded automatically by the ECD

5.0 SCHEDULE

The anticipated overall schedule associated with assessing the feasibility and effectiveness of an SSD system to prevent vapor intrusion into the four duplex housing units follows:

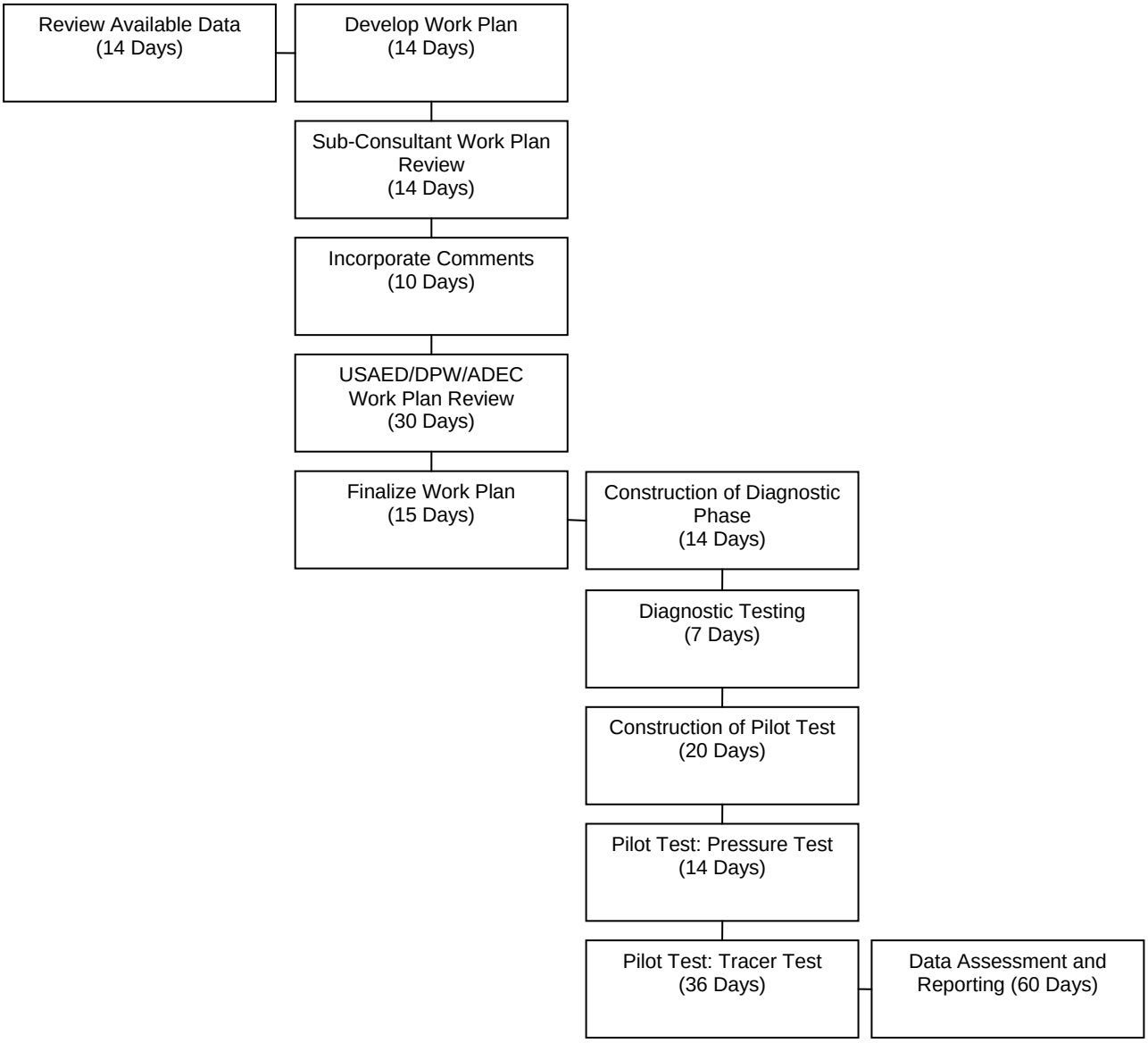

Note: Testing activities will simultaneously occur in multiple units, as applicable.

The expected schedule per system test in each SFH is presented below.

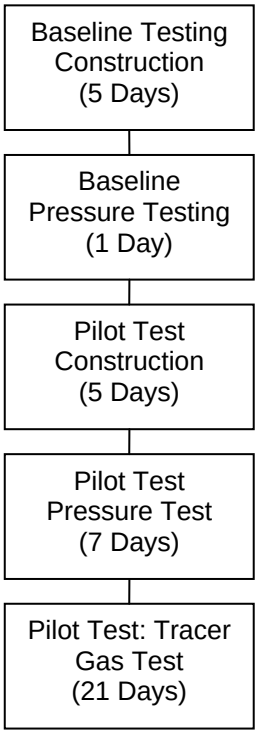

6.0 REPORTING

Reporting for this pilot test will entail periodic reporting to be included in the weekly situation report for Taku Gardens and a Data Assessment Report. The weekly reporting will provide information on progress of the pilot test, work accomplishments, problems encountered, and an anticipated schedule for the next week.

A short report will be provided after the initial installation and winter testing period. This report will detail construction activities, system installation, and initial findings.

The full Data Assessment Report will be submitted after the summer testing period. This report will present and discuss the results of the SSD pilot study. The diagnostic test results will be incorporated and conclusions from these tests will be provided. The report will assess the potential effectiveness of SSD systems at the site and provide recommendations for final system design in each type of duplex. Depending upon the effectiveness of the pilot test, the Final Report will provide information to support the design of a full-scale SSD system in each duplex of concern at Taku Gardens should one be necessary.

(intentionally blank)

7.0 REFERENCES

Emmerich, S.J., Howard-Reed, C. and Nabinger, S.J. 2004. "Validation of Multizone IAQ Model Predictions for Tracer Gas in a Townhouse." *Building Services Engineering Research and Technology*. 2004 25 (4), pp 305-316.

EPA (Environmental Protection Agency). 2001 (April). *Building Radon Out*. EPA/402K-01-002.

EPA. 1993 (October). *Technical Guidance (Third Edition) for Active Soil Depressurization Systems.* EPA/625/R-93/011. Office of Environmental Engineering and Technology. Research Triangle Park, NC.

Folkes, David J. 2003. *Design, Effectiveness, and Reliability of Sub-Slab Depressurization Systems for Mitigation of Chlorinated Solvent Vapor Intrusion.* Englewood, Colorado.

Freeman, Harley and Diana Holford. 1996 (September). "Effectiveness of a Passive Subslab Ventilation System in Reducing Radon Concentrations in a Home." *Environmental Science Technology*. 1996, 30 (10), pp 2914–2920.

ITRC (Interstate Technology Regulatory Council). 2007 (January). *Technical and Regulatory Guidance- Vapor Intrusion Pathway: A Practical Guidance.* Washington, DC.

MDEP (Massachusetts Department of Environmental Protection). 1995 (December). *Guidelines for the Design, Installation, and Operation of Sub-Slab Depressurization Systems*. Northeast Regional Office, Massachusetts.

USAED. (U.S. Army Engineer District, Alaska). 2010a. *2007/2008/2009 Former Communications site Drum and Debris and PCB Remedial Investigation*. Fort Wainwright, Alaska. [pending publication]

USAED. 2010b (October). *Draft Feasibility Study- Former Communications Site, Fort Wainwright, Alaska.* Fort Wainwright, Alaska

USAED. 2010c (April). *Draft Final Remedial Investigation: Former Communications Site, Fort Wainwright, Alaska.* Fort Wainwright, Alaska.

(intentionally blank)

APPENDIX A
Figures and Floor Plans

Figure A-1	FCS Location and Vicinity Maps
Figure A-2	Former Communications Site Map
Figure A-3	Duplex Floor Plan and Elevation
Figure A-4	Duplex 1 First Floor – System A
Figure A-5	Duplex 17 First Floor – System A
Figure A-6	Duplex 24 First Floor – System B
Figure A-7	Duplex 48 First Floor – System B
Figure A-8	Potential Areas of Influence and Overlap – Duplex 24
Figure A-9	System Installation Details
Figure A-10	Footing Details and System Schematic

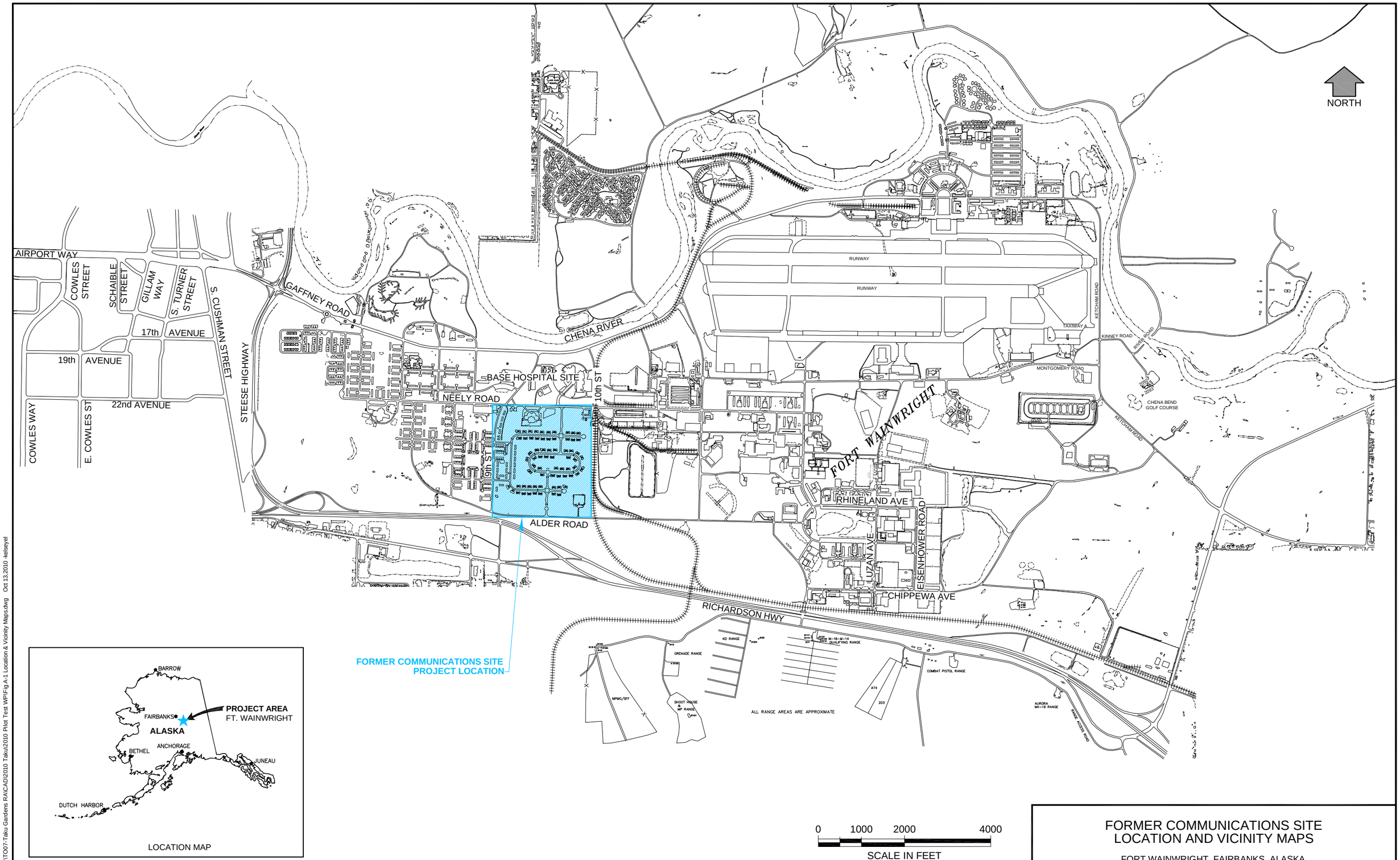

FORMER COMMUNICATIONS SITE LOCATION AND VICINITY MAPS

FORT WAINWRIGHT, FAIRBANKS, ALASKA

JACOBS	DATE: 13 December 2010	PROJECT MANAGER: S. Belway	FIGURE NO.: A-1

I:\ERS-URIT007-Taku Gardens RA\CAD\2010 Taku\2010 Pilot Test WP\Fig A-1 Location & Vicinity Maps.dwg Oct 13,2010 -kelseyel

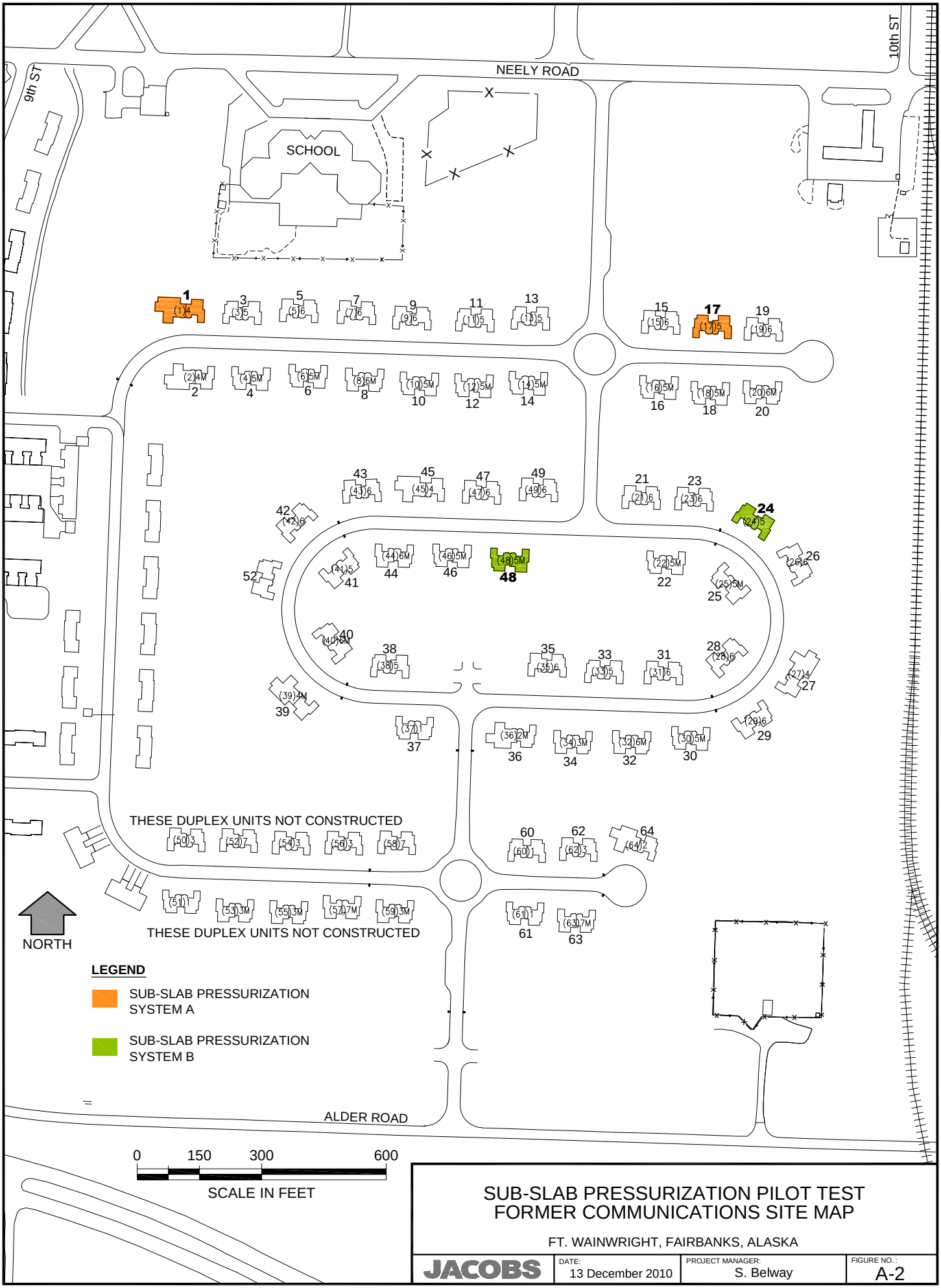

SUB-SLAB PRESSURIZATION PILOT TEST
FORMER COMMUNICATIONS SITE MAP

FT. WAINWRIGHT, FAIRBANKS, ALASKA

JACOBS	DATE: 13 December 2010	PROJECT MANAGER: S. Belway	FIGURE NO. : A-2

I:\ERS-UR\TO07-Taku Gardens RA\CAD\2010 Taku\2010 Pilot Test WP\Fig A-2 Site Map.dwg Oct 13,2010 -kelseyel

DUPLEX 1 - FLOOR PLAN

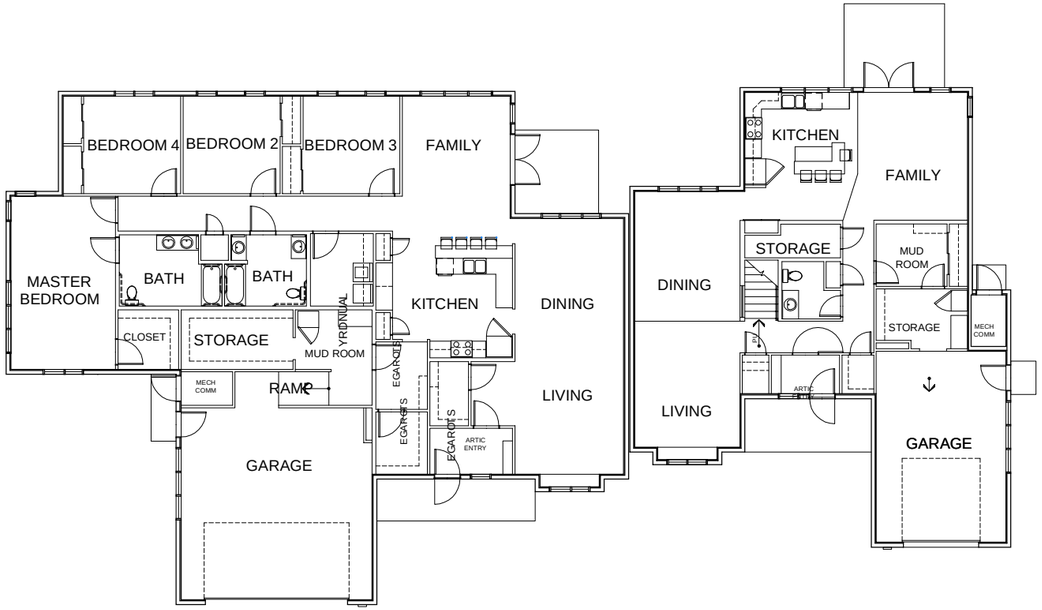

NORTH

UNIT D UNIT C(R)

DUPLEX 1 - ELEVATION VIEW

DUPLEX # 17, 24 & 48 - FLOOR PLAN

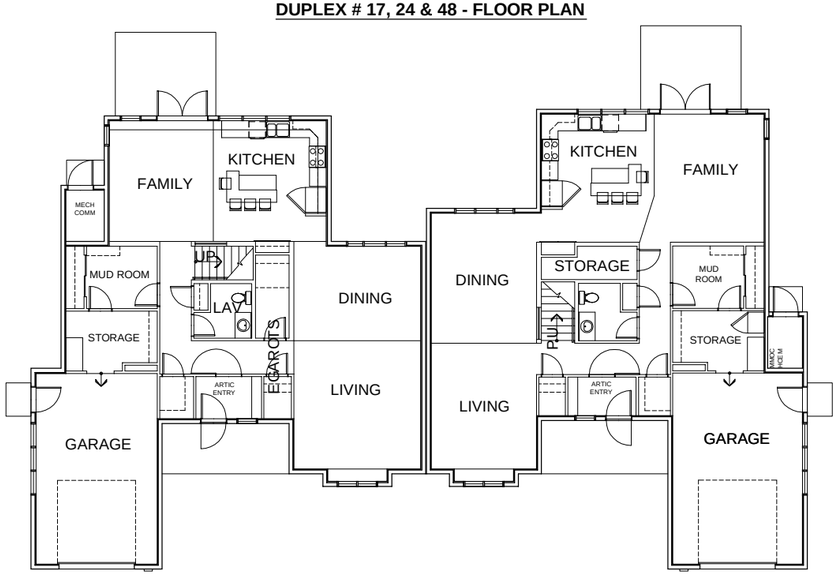

UNIT E UNIT C(R)

DUPLEX #17, 24, & 48 - ELEVATION VIEW

DUPLEX FLOOR PLAN AND ELEVATION

FT. WAINWRIGHT, FAIRBANKS, ALASKA

JACOBS	DATE: 13 December 2010	PROJECT MANAGER: T. Heikkila	FIGURE NO. : A-3

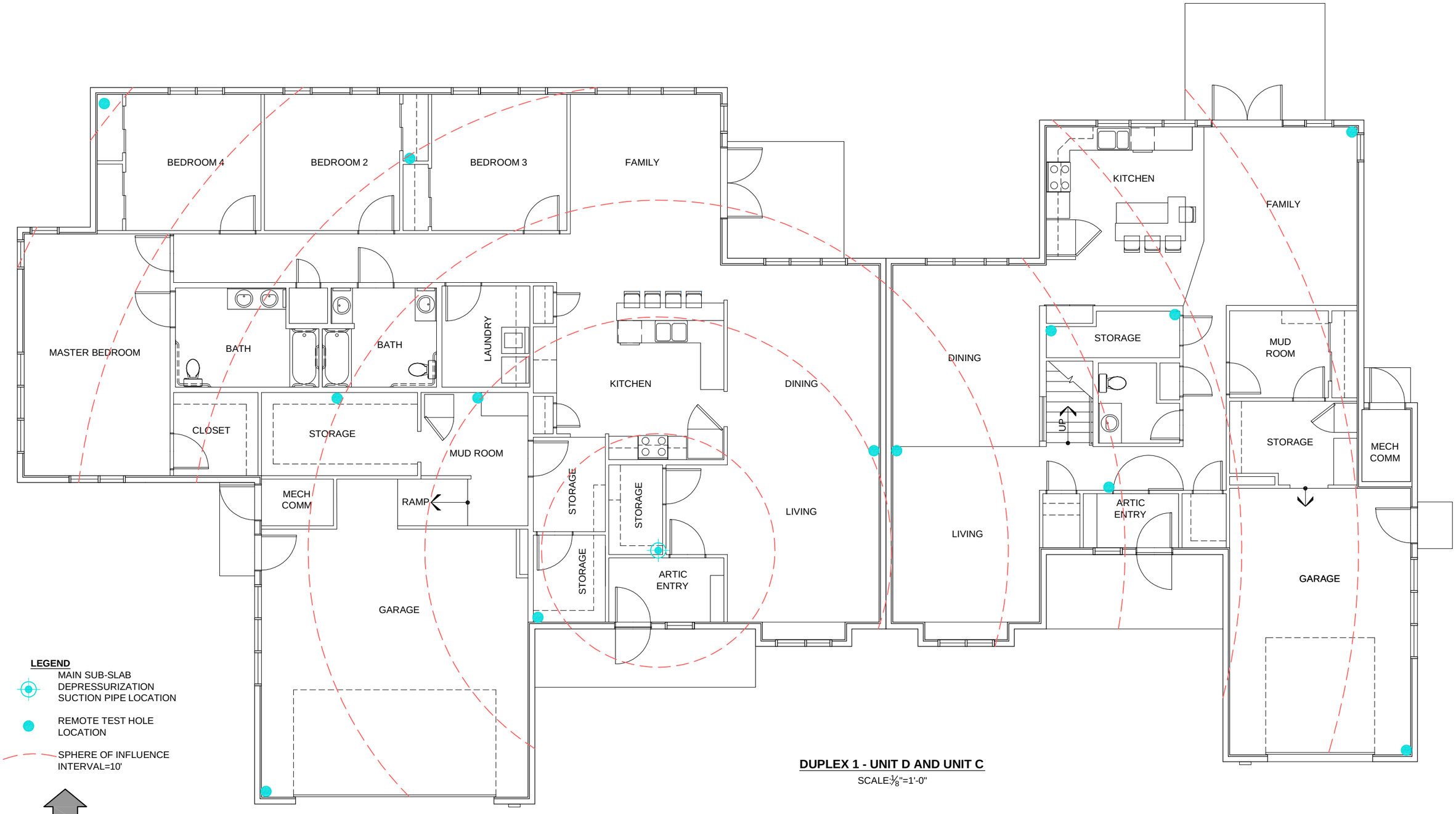

DUPLEX 1 - UNIT D AND UNIT C

SCALE:⅛"=1'-0"

SUB-SLAB DEPRESSURIZATION PILOT TEST
DUPLEX 1 FIRST FLOOR PLAN - SYSTEM A

FT. WAINWRIGHT, FAIRBANKS, ALASKA

JACOBS	DATE: 13 December 2010	PROJECT MANAGER: S. Belway	FIGURE NO.: A-4

I:\ERS-UR\TO07-Taku Gardens RA\CAD\2010 Taku\2010 Pilot Test WP\Fig A-4 Duplex 1.dwg Oct 13,2010 -kelseyel

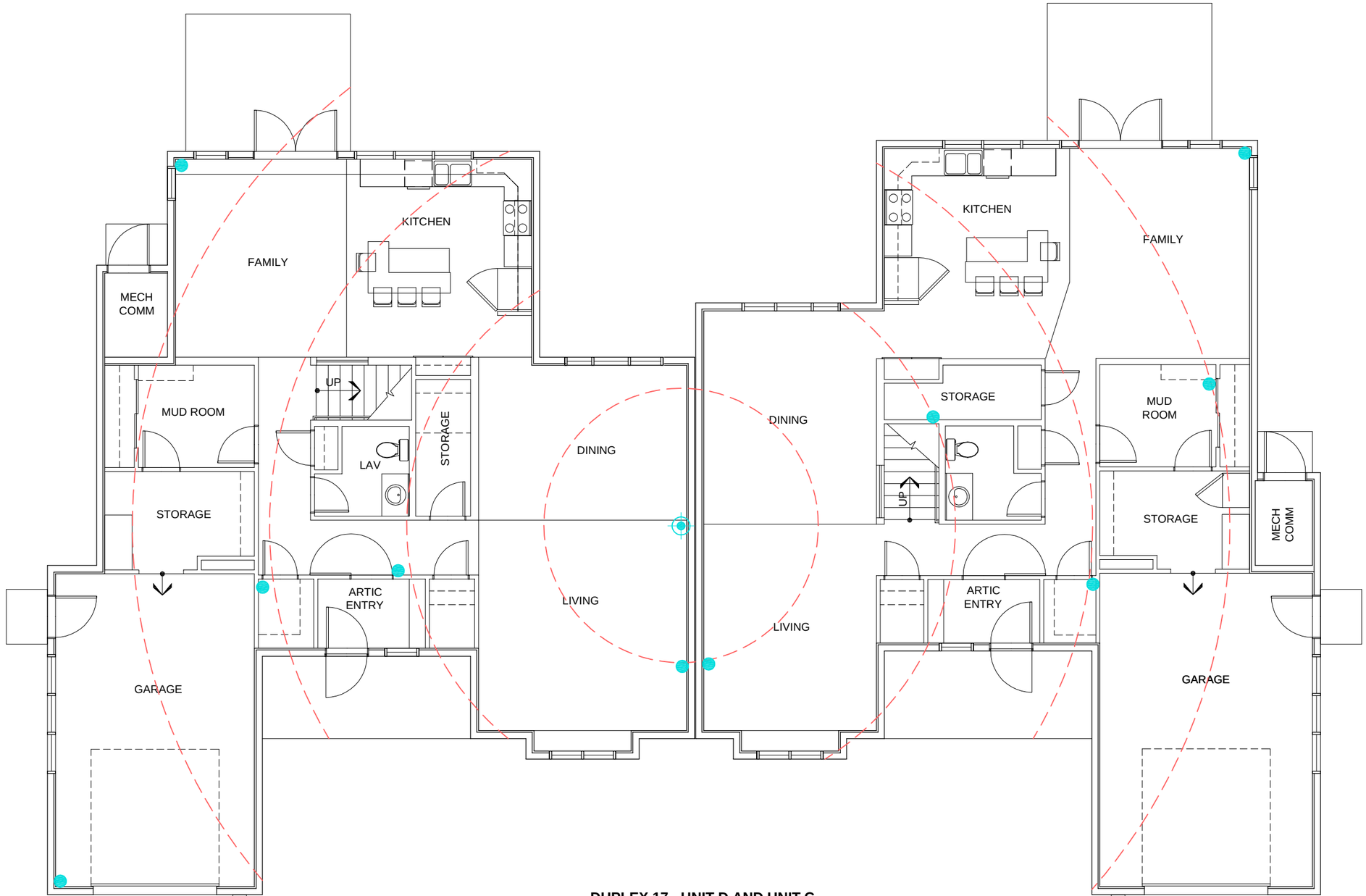

DUPLEX 17 - UNIT D AND UNIT C

SCALE: 1/8"=1'-0"

LEGEND

MAIN SUB-SLAB DEPRESSURIZATION SUCTION PIPE LOCATION

REMOTE TEST HOLE LOCATION

SPHERE OF INFLUENCE INTERVAL=10'

NORTH

4 0 2 4
SCALE IN FEET

SUB-SLAB PRESSURIZATION PILOT TEST
DUPLEX 17 FIRST FLOOR - SYSTEM A

FT. WAINWRIGHT, FAIRBANKS, ALASKA

JACOBS	DATE: 13 December 2010	PROJECT MANAGER: S. Belway	FIGURE NO.: A-5

I:\ERS-URTO07-Taku Gardens RA\CAD\2010 Taku\2010 Pilot Test WP\Fig A-5 Duplex 17.dwg Oct 13,2010 -kelseyel

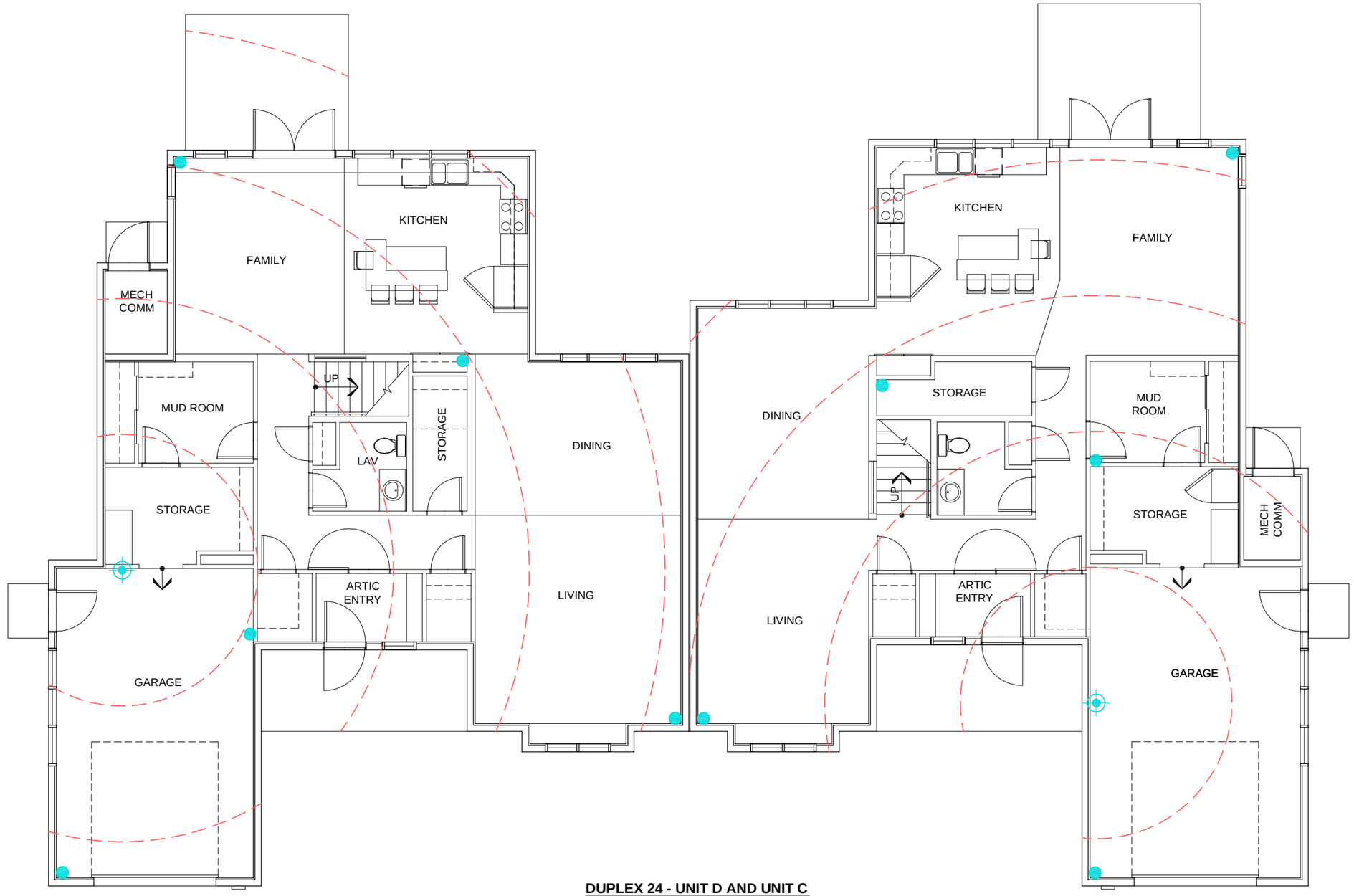

LEGEND

- MAIN SUB-SLAB DEPRESSURIZATION SUCTION PIPE LOCATION
- REMOTE TEST HOLE LOCATION
- SPHERE OF INFLUENCE INTERVAL=10'

DUPLEX 24 - UNIT D AND UNIT C

SCALE: 1/8"=1'-0"

NORTH

4 0 2 4
SCALE IN FEET

SUB-SLAB DEPRESSURIZATION PILOT TEST
DUPLEX 24 FIRST FLOOR PLAN - SYSTEM B

FT. WAINWRIGHT, FAIRBANKS, ALASKA

JACOBS	DATE: 13 December 2010	PROJECT MANAGER: S. Belway	FIGURE NO.: A-6

I:\ERS-UR\TO07-Taku Gardens RA\CAD\2010 Taku\2010 Pilot Test WP\Fig A-6 Duplex 24.dwg Oct 13,2010 -kelseyel

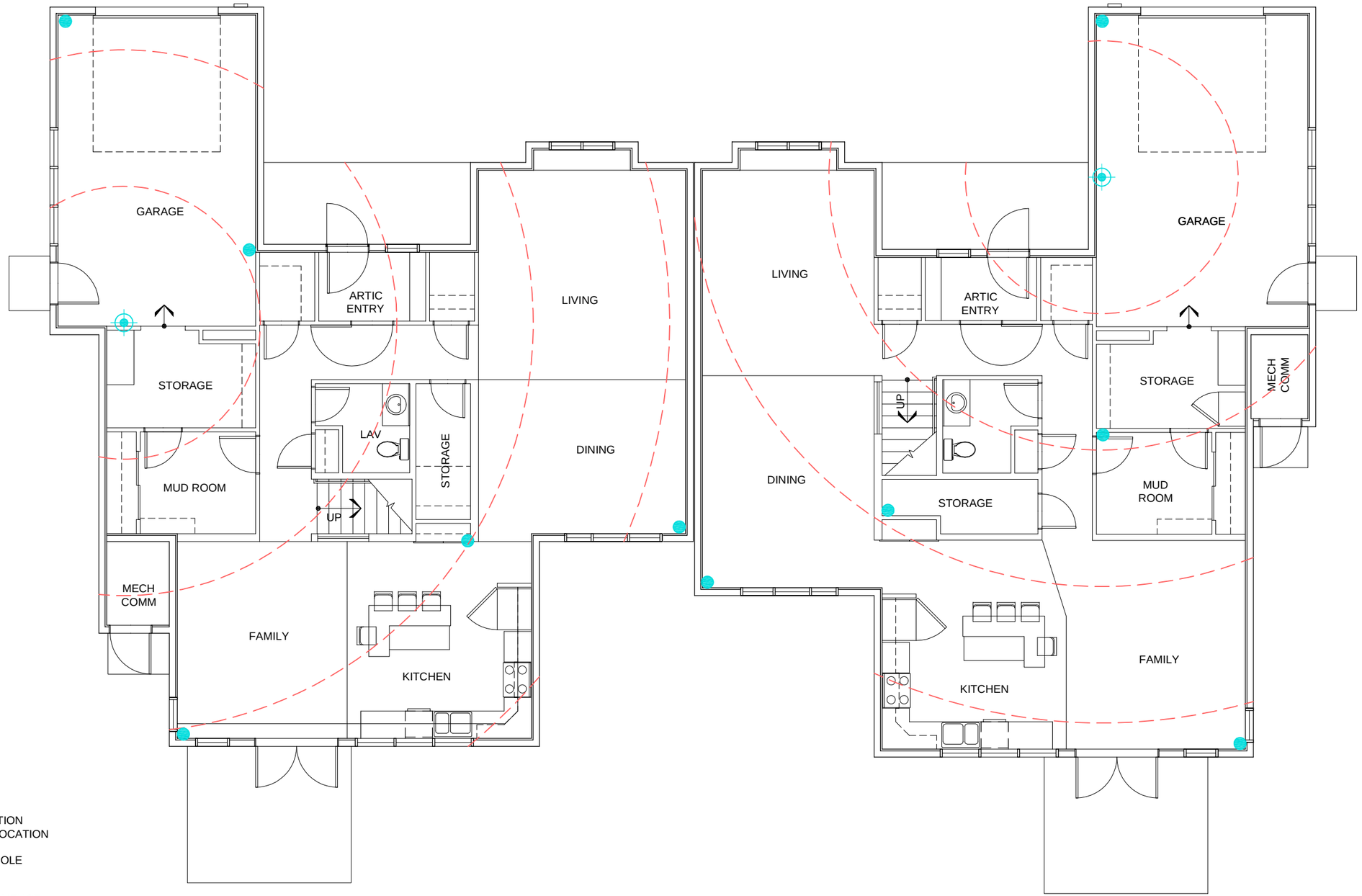

LEGEND

MAIN SUB-SLAB DEPRESSURIZATION SUCTION PIPE LOCATION

REMOTE TEST HOLE LOCATION

SPHERE OF INFLUENCE INTERVAL=10'

NORTH

4 0 2 4
SCALE IN FEET

DUPLEX 48 - UNIT D AND UNIT C

SCALE:3/8"=1'-0"

SUB-SLAB DEPRESSURIZATION PILOT TEST
DUPLEX 48 FIRST FLOOR - SYSTEM B

FT. WAINWRIGHT, FAIRBANKS, ALASKA

JACOBS	DATE: 13 December 2010	PROJECT MANAGER: S. Belway	FIGURE NO.: A-7

I:\ERS-URITO07-Taku Gardens RA\CAD\2010 Taku\2010 Pilot Test WP\Fig A-7 Duplex 48.dwg Oct 13,2010 -kelseyel

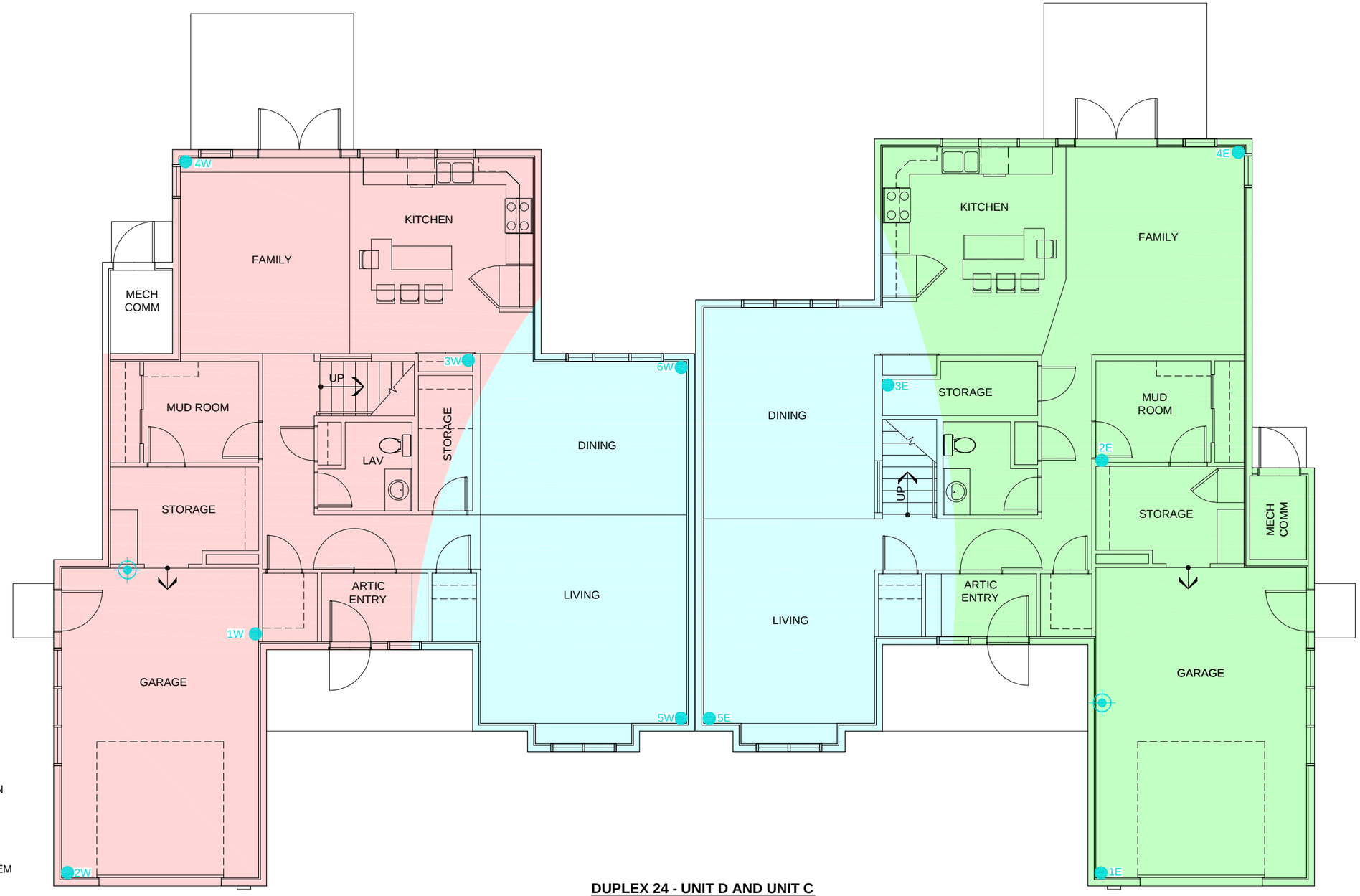

DUPLEX 24 - UNIT D AND UNIT C

SCALE:1/8"=1'-0"

NORTH

LEGEND

- MAIN SUB-SLAB DEPRESSURIZATION SUCTION PIPE LOCATION
- REMOTE TEST HOLE LOCATION
- AREA OF POTENTIAL INFLUENCE-WEST SYSTEM
- AREA OF POTENTIAL INFLUENCE-EAST SYSTEM
- AREA OF POTENTIAL ADDITIVE EFFECT

4 0 2 4
SCALE IN FEET

SUB-SLAB DEPRESSURIZATION PILOT TEST
DUPLEX 24 - AREA OF POTENTIAL INFLUENCE

FT. WAINWRIGHT, FAIRBANKS, ALASKA

JACOBS	DATE: 13 December 2010	PROJECT MANAGER: S. Belway	FIGURE NO.: A-8

I:\ERS-UR\TO07-Taku Gardens RA\CAD\2010 Taku\2010 Pilot Test WP\Fig A-8 Duplex 24.dwg Oct 13,2010 -kelseyel

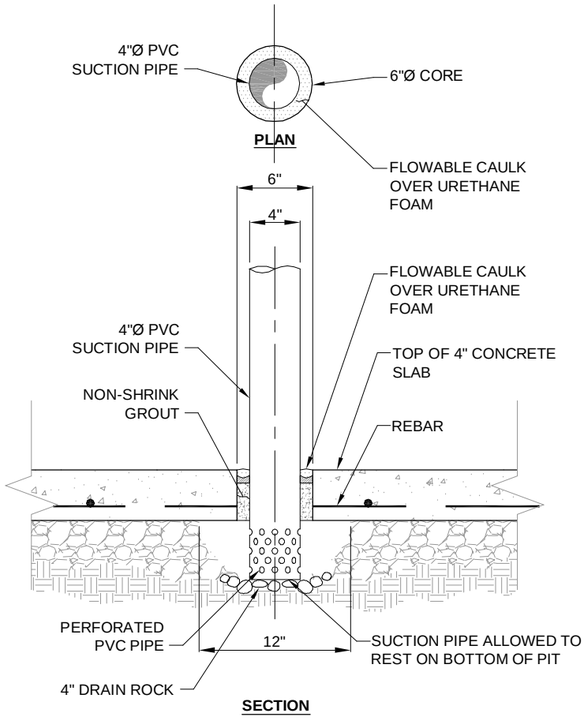

1 / A-7 CONCRETE SLAB PENETRATION DETAIL

SCALE:1"=1'-0"

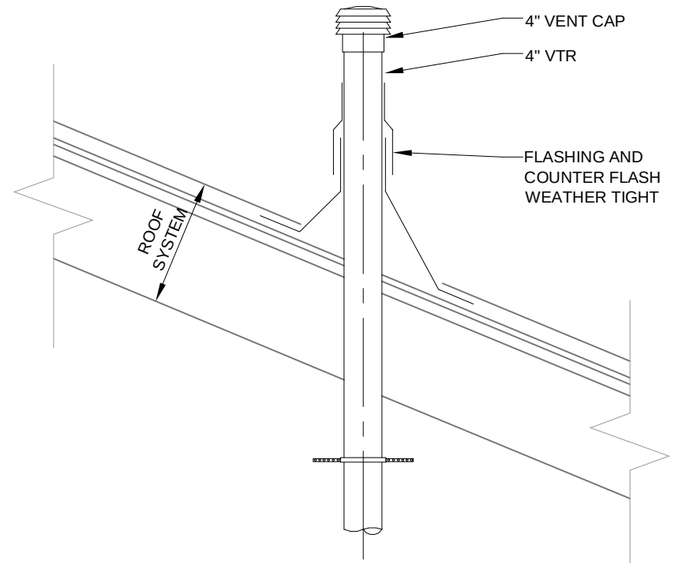

3 / A-7 FINAL ATTIC INSTALLATION DETAIL

SCALE:¾"=1'-0"

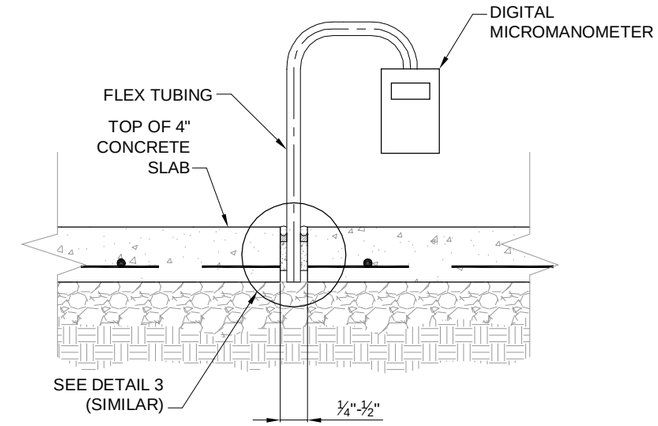

5 / A-7 REMOTE TEST HOLE CONCRETE SLAB PENETRATION DETAIL

SCALE:¾"=1'-0"

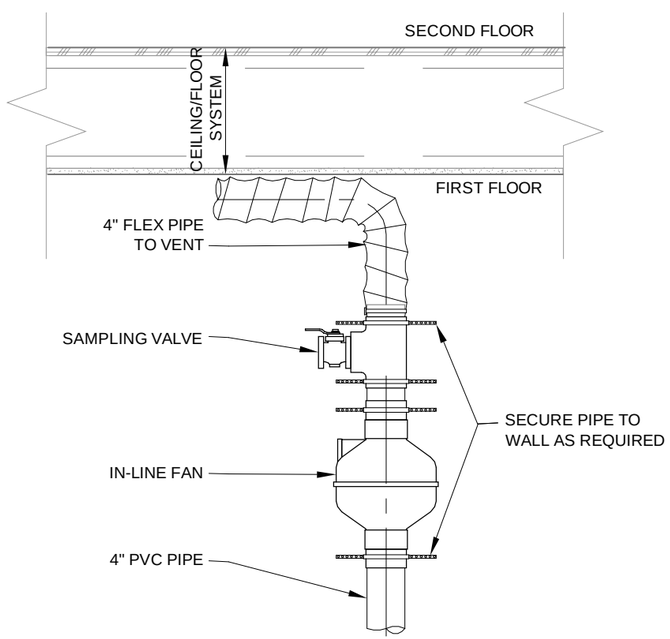

2 / A-7 INITIAL INSTALLATION DETAIL

SCALE:¾"=1'-0"

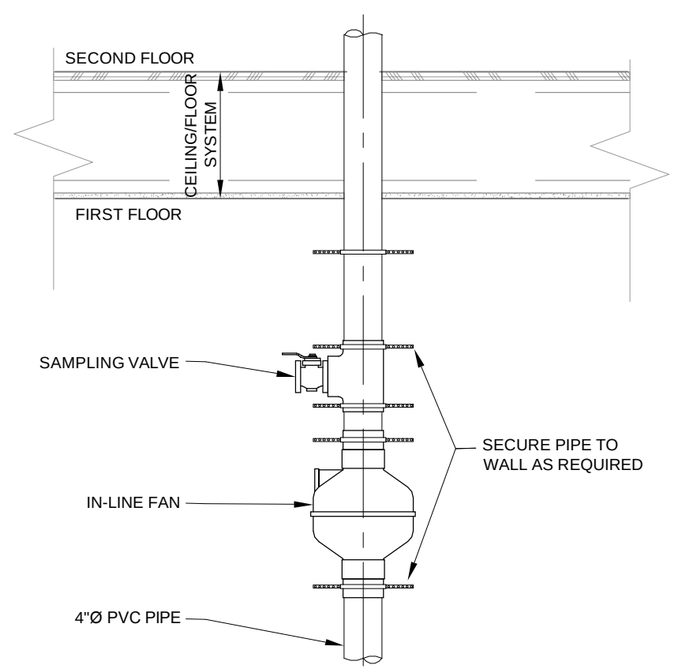

4 / A-7 FINAL 1st FLOOR CEILING INSTALLATION DETAIL

SCALE:¾"=1'-0"

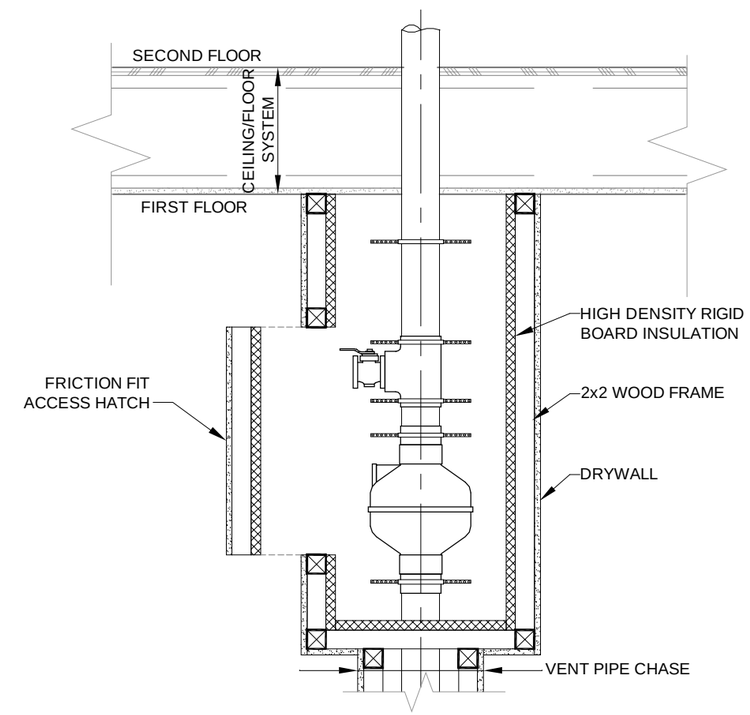

6 / A-7 SAMPLING VALVE / INLINE FAN ENCLOSURE

SCALE:¾"=1'-0"

SUB-SLAB DEPRESSURIZATION PILOT TEST
SYSTEM INSTALLATION DETAILS

FT. WAINWRIGHT, FAIRBANKS, ALASKA

JACOBS	DATE: 13 December 2010	PROJECT MANAGER: S. Belway	FIGURE NO.: A-9

I:\ERS-JR\TO07-Taku Gardens RA\CAD\2010 Taku\2010 Pilot Test WP\Fig A-9 Misc Details.dwg Dec 02,2010 -avakarcs

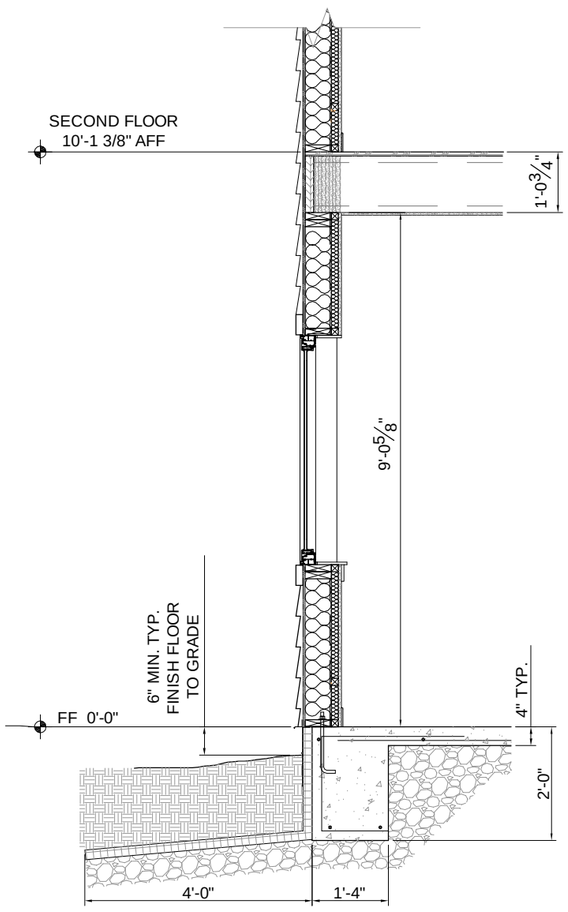

EXTERIOR WALL

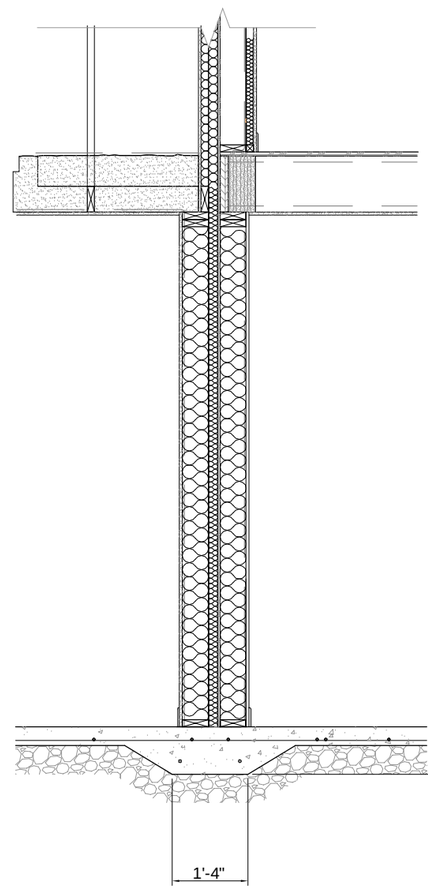

INTERIOR WALL

1 / A-8 TYPICAL FOOTING DETAILS

NOT TO SCALE

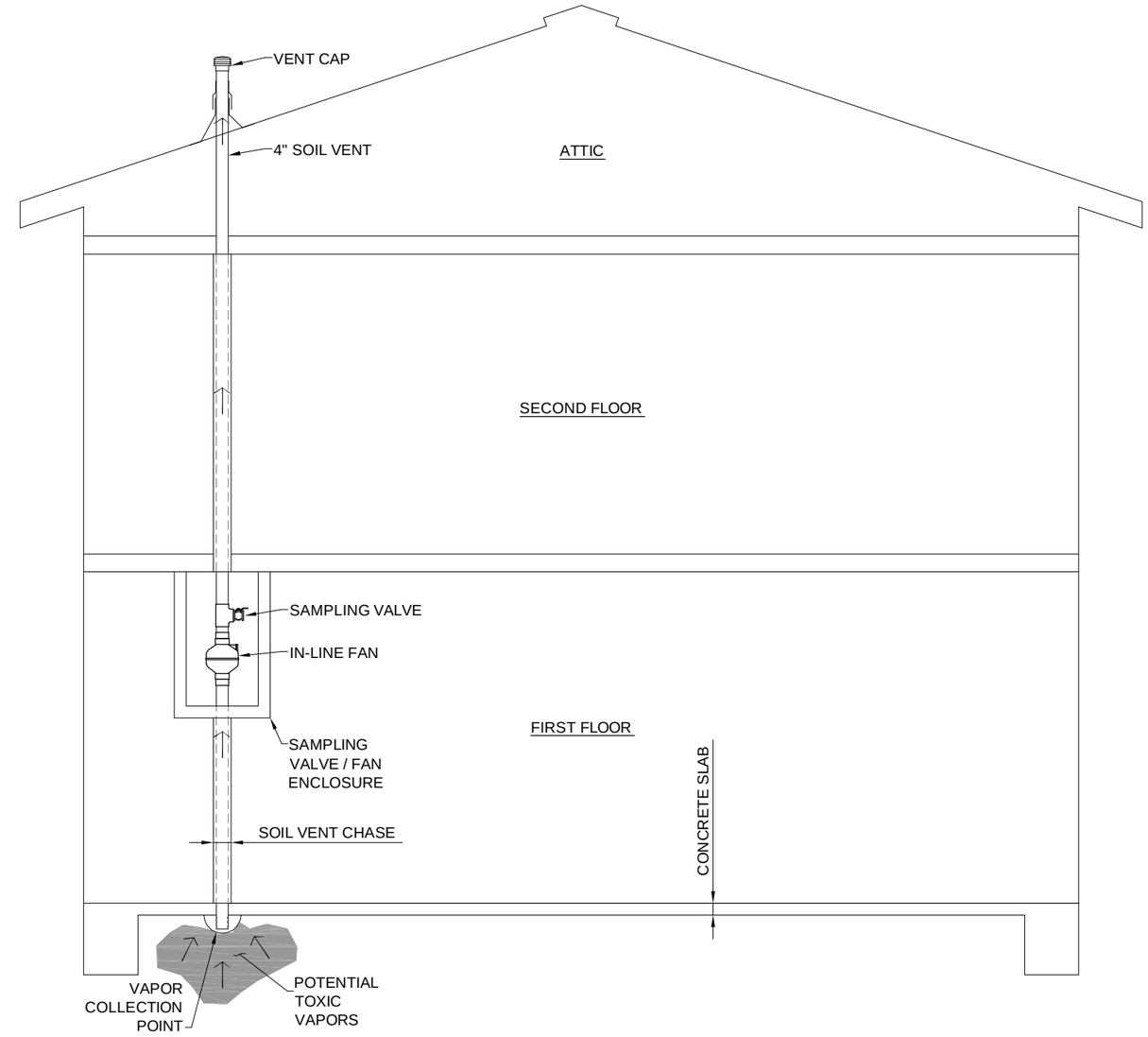

2 / A-8 TYPICAL SYSTEM SCHEMATIC DIAGRAM

NOT TO SCALE

SUB-SLAB DEPRESSURIZATION PILOT TEST
TYPICAL FOOTING DETAILS AND SOIL VENT SYSTEM

FT. WAINWRIGHT, FAIRBANKS, ALASKA

JACOBS	DATE: 13 December 2010	PROJECT MANAGER: S. Belway	FIGURE NO.: A-10

I:\ERS-JR\TO07-Taku Gardens RA\CAD\2010 Taku\2010 Pilot Test WP\Fig A-10 Misc Details.dwg Dec 02,2010 -avakarcs

APPENDIX B
Equations and Calculations

Variables and Equations for Suction Loss due to friction in the final system

Table B-1: Straight Feet Equivalents for Pipe Fittings

Type of Fitting	L/D Ratio	Equivalent feet of Straight Pipe
Tee	60	20
90° Elbow - Smooth round curve	9	3
90° Elbow - Sharp Turn	65	22
45° Elbow - Smooth round curve	4.5	1.5
45° Elbow - 3 piece elbow	6	2

Figure B-1: Suction Loss as a Result of Pipe Diameter and Volumetric Flow Rate

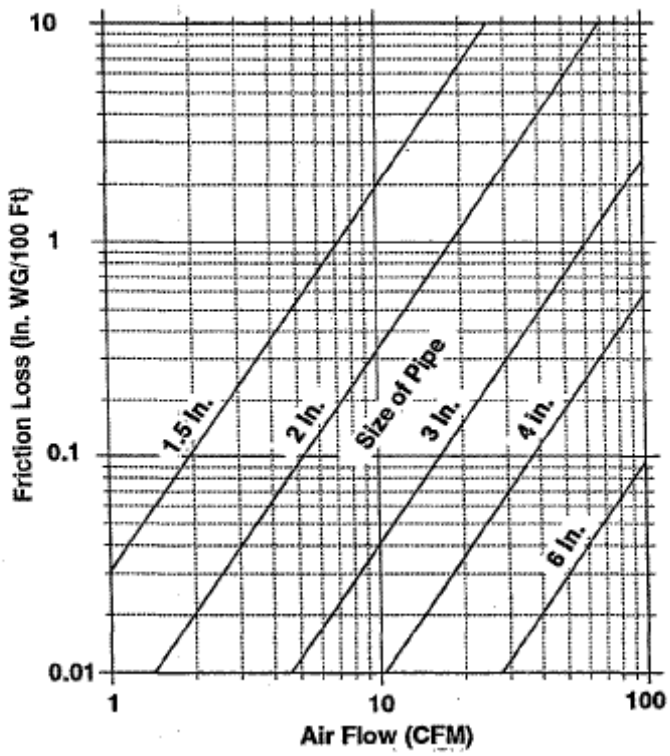

Equation of suction loss due to friction:

a.) $\frac{\text{Suction loss values in straight pipe (ft)} + \text{Total actual straight pipe used in system (ft)}}{100}$

[Answer from a.)] × [Number from Figure B-1] = **Total estimated suction loss in piping network at the projected flow**

APPENDIX C
Data Recording Sheets

Diagnostic Testing

Duplex #_____

Start Date_____

Observer_____

Test Hole #	Date	Time	Pressure (Pa)	Flow (cfm)

Pilot Testing: Pressure Test

Duplex #_____

Start Date_____

Observer_____

Date	Time	Pressure (Pa)

Core Drilling Log

Duplex #_____

Start Date_____

Observer_____

Test Hole #	Date	Time	Distance from Main (ft)	PID	Comments (Core integrity, findings, observations)