*FM 21-16
FMFM 13-8-1

Field Manual No. 21-16 HEADQUARTERS
Fleet Marine Force DEPARTMENT OF THE ARMY
Manual No. 13-8-1 US MARINE CORPS
Washington, DC, 30 August 1994

UNEXPLODED ORDNANCE (UXO) PROCEDURES

CONTENTS

Page

PREFACE iv
Purpose iv
Scope iv
Training Strategy vi
User Information vi

CHAPTER 1. THE UXO HAZARD 1-1
UXO Locations and Threats 1-1
General Safety Guidelines 1-2

DISTRIBUTION RESTRICTION: Approved for public release; distribution is unlimited.

*This publication supersedes FM 9-16, 30 July 1981.

Marine Corps PCN: 139 714000 00

CHAPTER 2. RECOGNIZE UXO 2-1
Dropped Ordnance 2-1
Projected Ordnance 2-17
Thrown Ordnance 2-25
Placed Ordnance 2-29

CHAPTER 3. TAKE IMMEDIATE ACTION 3-1
Protective Measures 3-2
Mark UXO 3-9

CHAPTER 4. REPORT THE UXO HAZARD 4-1
UXO Spot Report 4-1
Prioritizing the Spot Report 4-3

CHAPTER 5. SELF-EXTRACTION FROM UXO HAZARDS 5-1
Detection 5-1
Immediate Actions 5-2
Situational Assessment 5-3
Breaching Techniques 5-3

APPENDIX A. AMMUNITION COLOR CODES A-1

APPENDIX B. DROPPED ORDNANCE IDENTIFICATION AND NET EXPLOSIVE WEIGHTS B-1
Bombs B-1
Dispenser B-3
Submunitions B-4

APPENDIX C. PROJECTED ORDNANCE IDENTIFICATION AND NET EXPOSIVE WEIGHTS C-1
Projectiles C-1
Mortars C-9
Rockets C-12
Guided Missiles C-16
Rifle Grenades C-18

APPENDIX D. THROWN ORDNANCE IDENTIFICATION AND NET EXPLOSIVE WEIGHTS D-1
Fragmentation Grenades D-1
Antitank Grenades D-2
Smoke Grenades D-3
Illumination Grenade D-5

APPENDIX E. PLACED ORDNANCE IDENTIFICATION AND NET EXPLOSIVE WEIGHTS E-1
Antipersonnel Mines E-1
Antitank Mines E-3

GLOSSARY Glossary-1

REFERENCES References-1
Documents Needed References-1
Readings Recommended References-1

INDEX Index-1

CHAPTER 1

THE UXO HAZARD

There were 21 US Army personnel killed and 53 injured during Operation Desert Storm as a direct result of handling UXO. Every person on the battlefield must be able to recognize and react to these hazards. Likewise, every leader must ensure that all personnel know how to recognize and react to these hazards.

UXO LOCATIONS AND THREATS

UXOs are hazards–whether on the battlefield or in designated impact areas. UXO includes ordnance items that have been fired, projected, dropped, or placed in such a way that they could become armed and go off. Whether in an area by design or accident, these items have not yet functioned. Whatever the reason, UXO poses the risk of injury or death to all personnel.

The EOD mission is to eliminate or reduce the threat of UXO hazards. The engineer mission is to clear minefield and wide areas of area-denial submunitions. However, these two groups individually or together will be unable to react immediately to an enemy submunitions or scatterable-mine attack on a position. Any unit that cannot extract itself from these attacks risks being fixed in place and destroyed by follow-on enemy fire.

In wartime there are two types of UXO threats, passive and active. The passive threat refers to any ordnance found by personnel as they move across the battlefield. The active threat refers to any ordnance that remains in the area after a direct attack on a position. All units must be able to react to both types of UXO threats in order to survive on the battlefield.

In addition to the battlefield, UXOs are also found in designated impact areas. These areas are marked on all military maps, and they

are also marked on the ground by warning signs and fences. Personnel are not allowed in these areas because of the UXO hazards.

GENERAL SAFETY GUIDELINES

Personnel can lessen the danger of UXO hazards by being able to recognize a UXO hazard and by strictly following the basic safety guidelines listed below.

Ž **Do not** continue to move towards a suspected UXO. See Figure 1-1. Some types of ordnance have magnetic or motion-sensitive fuzing and will not detonate until they sense a target. Others may have self-destruct timers built in. Once you recognize a UXO hazard, **do not** move any closer. Make any further observations with binoculars if necessary. Refer to Chapter 2 for additional information on the recognition of UXO.

940032001

Figure 1-1. Never approach a suspected UXO.

Ž Make all radio transmissions at least 100 meters away from a UXO hazard. See Figure 1-2. When transmitting, radios send out electricity from their antennas. This electricity can make a UXO blow up.

94032002

Figure 1-2. Never transmit near a UXO.

Do not try to remove anything that is on or near a UXO. See Figure 1-3. Your actions could make the UXO blow up.

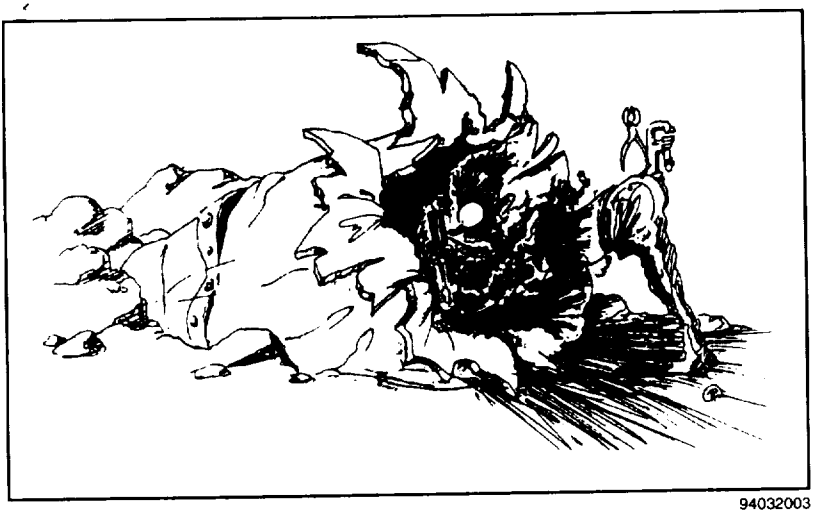

94032003

Figure 1-3. Never attempt to remove any part of a UXO.

Ž Do not move or disturb a UXO. See Figure 1-4. It could blow up.

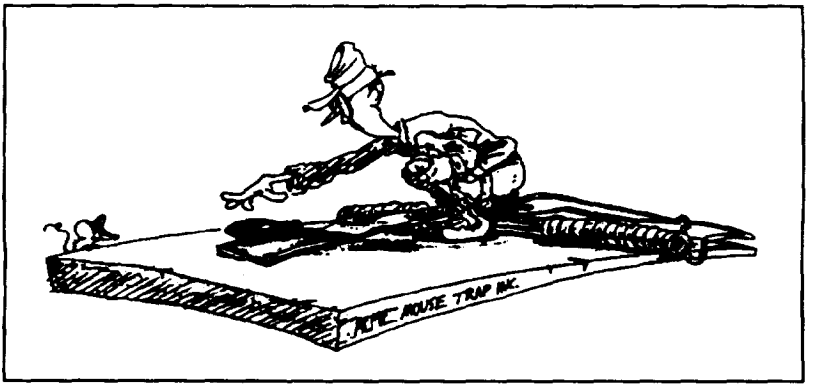

94032004

Figure 1-4. Never attempt to move or disturb a UXO.

Ž Stay away from UXOs. See Figure 1-5. This is the best way to prevent accidental injury or death.

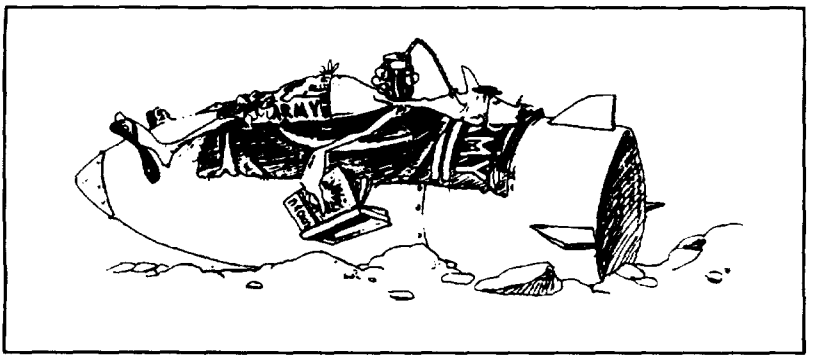

94032005

Figure 1-5. Avoid the area where a UXO is located..

Ž Mark a UXO hazard area properly so that other personnel will stay away from it. See Figure 1-6. Proper marking also helps EOD technicians find the area when they respond to your report. Refer to Chapter 3 for additional information.

94032006

Figure 1-6. The area must be clearly marked.

Evacuate all nonessential personnel and equipment from a UXO hazard area. If personnel and equipment cannot be evacuated, you must take protective measures to reduce the risk to them. Refer to Chapter 3 for additional information.

Report through your chain of command all UXO hazards that affect your operations. Reporting UXO hazards will get your unit the help it needs. Refer to Chapter 4 for additional information.

If necessary, extract the unit from a hazardous area. Refer to Chapter 5 for additional information.

CHAPTER 2

RECOGNIZE UXO

Being able to recognize a UXO is the first and most important step in reacting to a UXO hazard. There is a multitude of ordnance used throughout the world, and it comes in all shapes and sizes. This chapter explains and shows the general identifying features of the different types of ordnance, both foreign and US. In this chapter, ordnance is divided into four main types: dropped, projected, thrown, and placed.

DROPPED ORDNANCE

Regardless of its type or purpose, dropped ordnance is dispensed or dropped from an aircraft. Dropped ordnance is divided into three subgroups: bombs; dispensers, which contain submunitions; and submunitions. Photographs of dropped ordnances and their net explosive weights (NEWS) are in Appendix B.

BOMBS

As shown in Figure 2-1, page 2-2, general-purpose bombs come in many shapes and sizes depending on the country that made them and how they are to be used. Generally, all of these bombs are built the same and consist of a metal container, a fuze, and a stabilizing device. The metal container (called the bomb body) holds an explosive or chemical tiller. The body may be in one piece or in multiple pieces. The bombs shown in Figure 2-2. page 2-3, are Soviet-style, general-purpose bombs.

Chemical-agent filled bombs are built the same as general-purpose bombs. In Figure 2-3, page 2-4, the US chemical bombs are general-purpose bombs. They have a chemical filler in place of an explosive filler. The color codes and markings shown in

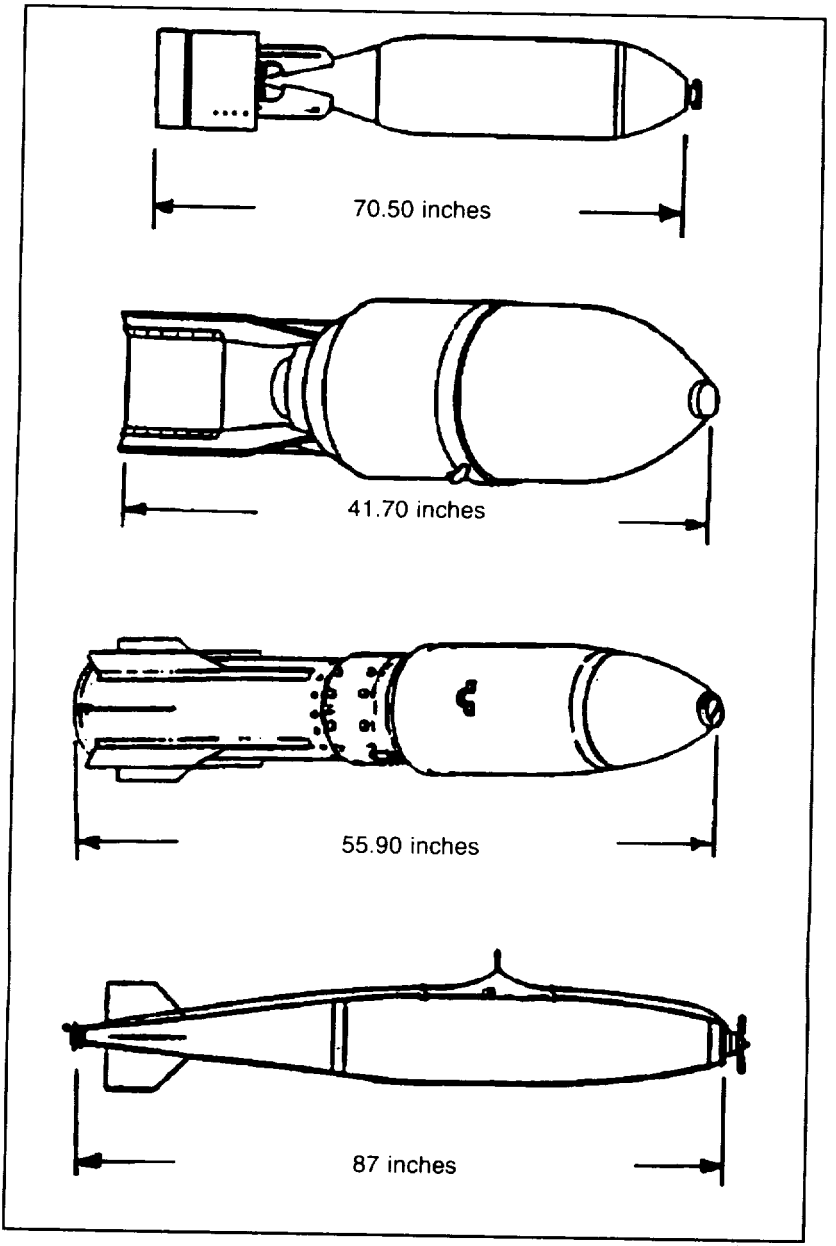

Figure 2-1. General-purpose bombs.

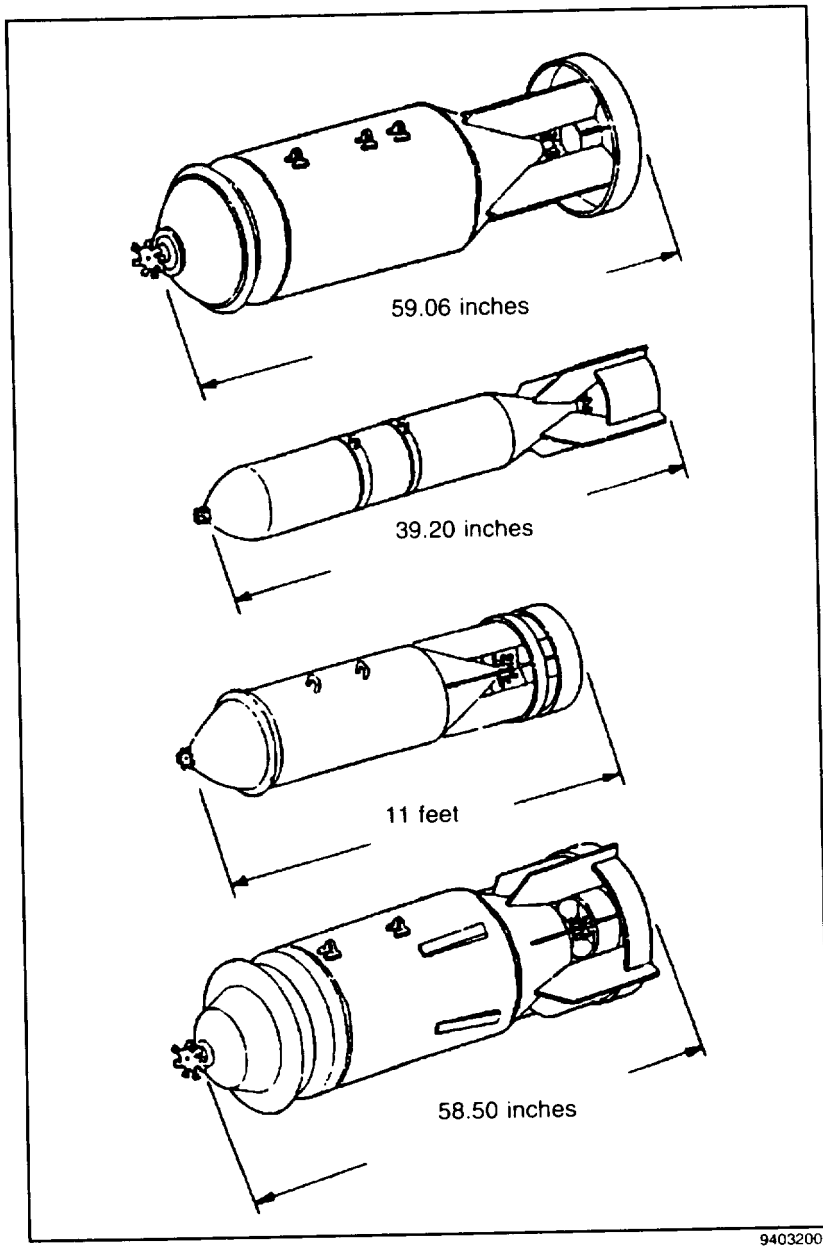

Figure 2-2. Soviet-style, general-purpose bombs.

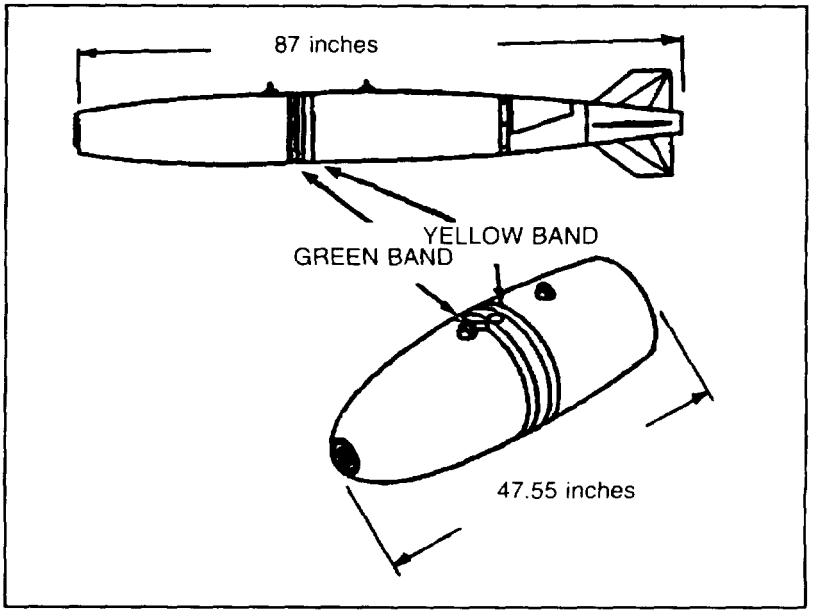

Figure 2-3. US chemical bombs.

Appendix A may be used to identify chemical bombs. For example, the US and North Atlantic Treaty Organization (NATO) color code for chemical munitions is a gray background with a dark green band. The former Soviet Union used the same bombs as shown in Figure 2-2, page 2-3, and added a combination of green, red, and blue markings to the nose and tail sections to indicate chemical agents. Soviet bombs all have a gray background. See Appendix A.

Fuzes

Fuzes used to initiate bombs are either mechanical or electrical, They are generally placed in the nose or tail section, internally or externally. The fuzes may not always be visible, as they are often covered by the fin assembly. As shipped, fuzes are in a safe (unarmed) condition and cannot function until armed.

Mechanical fuzing, whether in the nose or in the tail, is generally armed by some type of arming vane as shown in Figure 2-4.

The arming vane assembly operates like a propeller to line up all of the fuze parts so the fuze will become armed.

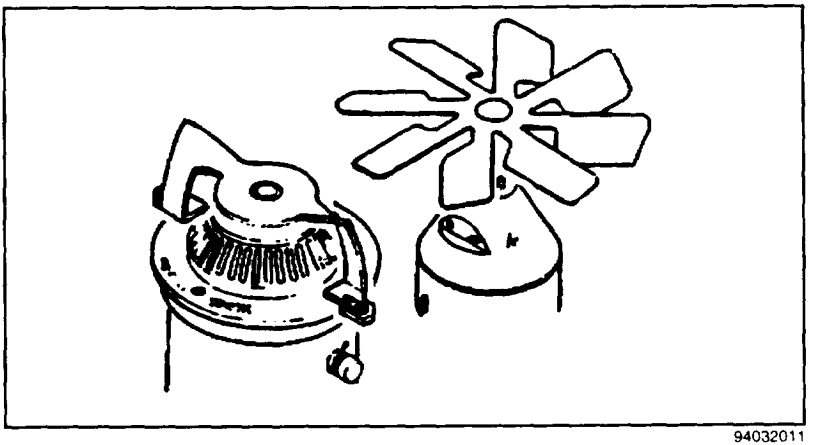

94032011

Figure 2-4. Arming vane assemblies.

Electrical fuzes have an electric charging assembly in place of an arming vane. They are armed by using power from the aircraft. Just before the pilot releases the bomb, the aircraft supplies the required electrical charge to the bomb's fuze.

Action of the fuze may be impact, proximity, or delay. Impact fuzes function when they hit the target. Proximity fuzes function when bombs reach a predetermined height above the target. Delay fuzes contain an element that delays explosion for a fixed time after impact.

To be safe, personnel should consider that all bombs have the most dangerous kind of fuzing, which is proximity or delay. Approaching a proximity- or delay -fuzed bomb causes unnecessary risk to personnel and equipment. Although it should function before it hits the target, proximity fuzing may not always do so. Once the bomb hits the ground, the proximity fuze can still function. It can sense a change in the area around the bomb and blow up. Delay fuzing can be mechanical, electrical, or chemical. Mechanical- and electrical-delay fuzes are nothing more than clockwork mechanisms. The chemical-delay fuze uses a chemical

compound inside the fuze to cause a chemical reaction with the firing system. Delay fuzing times can range from minutes to days.

Stabilizing Devices

Bombs are stabilized in flight by either fin or parachute assemblies. These assemblies attach to the rear section of the bomb and keep the bomb nose-down during its descent. These assemblies can separate from the bomb after the bomb hits the ground. As shown in Figure 2-5, two common types of fin assemblies used by foreign countries are the conical- and box-fin assemblies. The retarding-fin assembly shown in Figure 2-6 is used by the US for most of its general-purpose bombs.

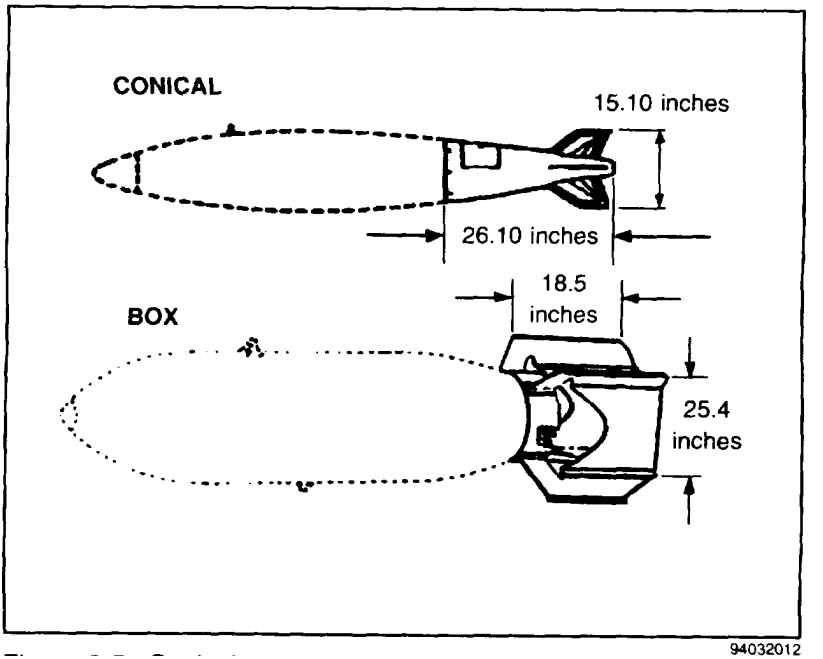

Figure 2-5. Conical- and box-fin assemblies.

Some bombs are stabilized by a parachute assembly as shown in Figure 2-7. The parachute assembly opens after the bomb is released from the aircraft. Even though the parachute may separate from the bomb after it hits the ground, you should never try to

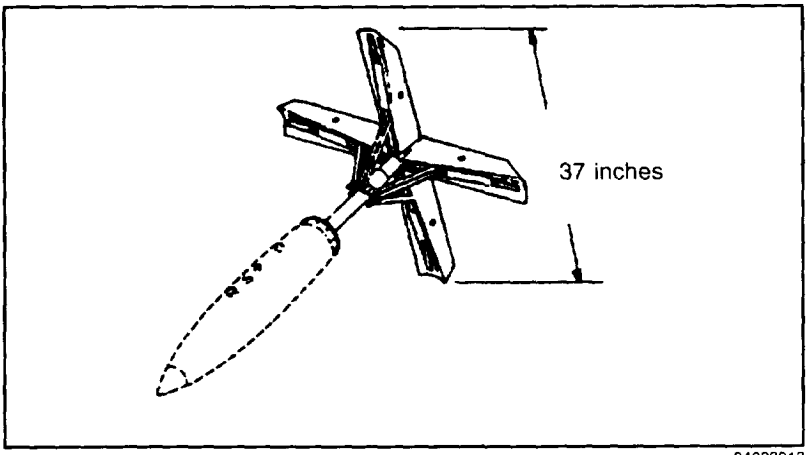

94032013

Figure 2-6. Retarding-fin assembly (opens after release).

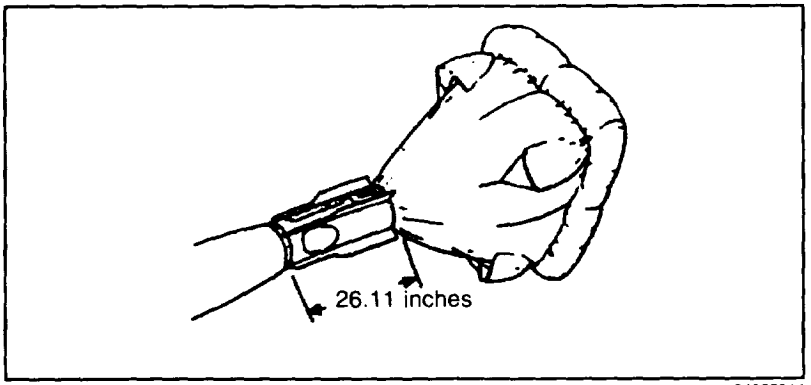

94032014

Figure 2-7. Parachute assembly.

recover a parachute assembly found lying on the ground. The bomb may have become buried, and the parachute could still be attached to the bomb.

As shown in Figure 2-8, page 2-8, former Soviet Union bombs have fins that are welded to the bomb body. Therefore, the fins cannot become separated from the bomb. However, the fins can wrap around the rear section of the bomb after it hits the ground and obscure the tail fuze from view.

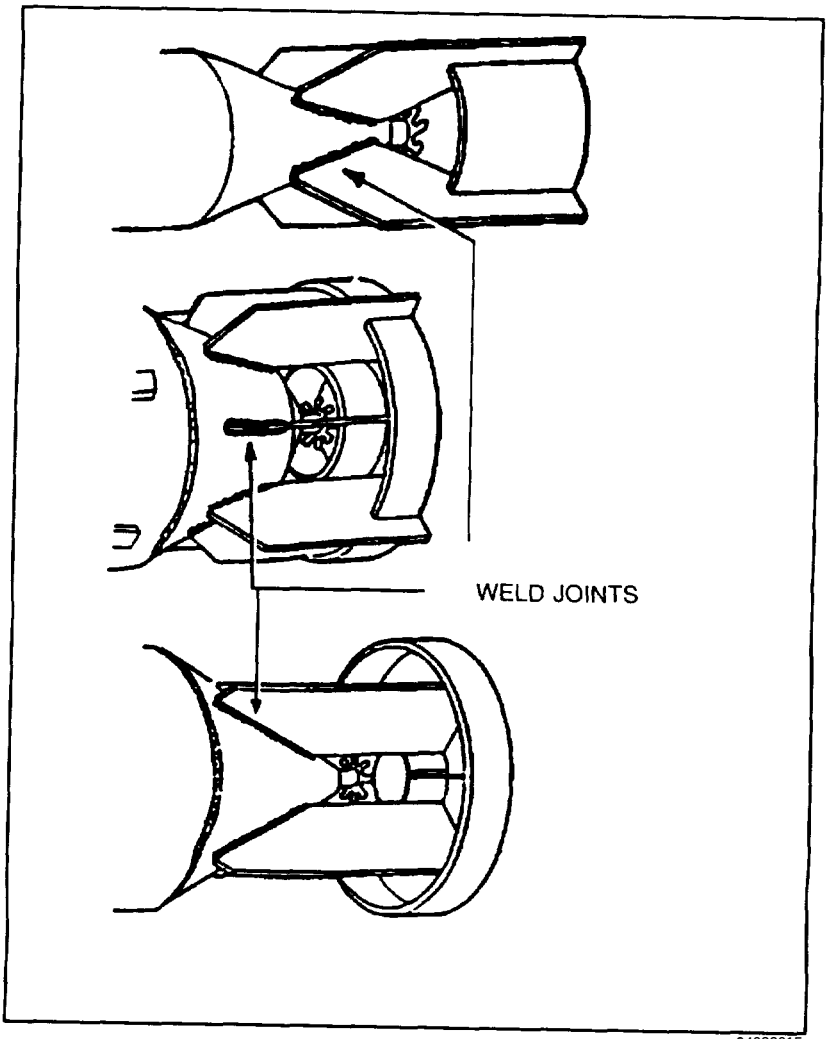

Figure 2-8. Soviet-style fin assemblies.

94032015

DISPENSERS

Dispensers may be classified as another type of dropped ordnance. Like bombs, they are carried by aircraft. Their payload, however, is smaller ordnance called submunitions. Submunitions are discussed later in this chapter, In Figure 2-9, the cutaway

shows the submunitions inside the dispenser body. Dispensers come in a variety of shapes and sizes depending on the payload inside. Some dispensers are reusable, and some are one-time-use items.

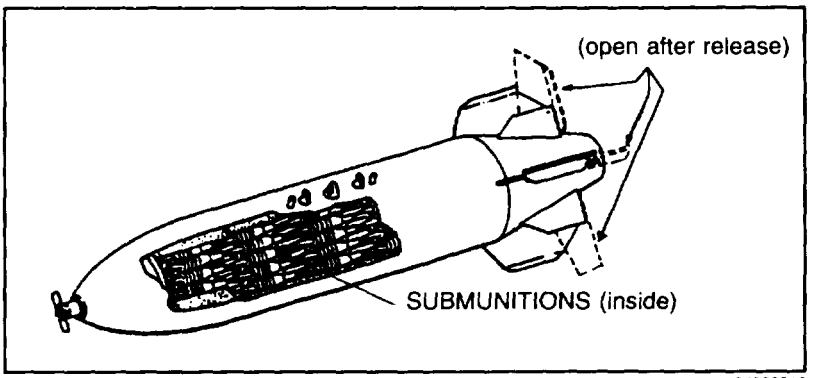

Figure 2-9. Dispenser (cutaway section).

Never approach a dispenser or any part of a dispenser you find on the battlefield. The payload of submunitions always scatters in the area where the dispenser hit the ground.

Dropped Dispensers

These dispensers (Figure 2-10, page 2-10) fall away from the aircraft and are stabilized in flight by fin assemblies. Dropped dispensers may be in one piece or in multiple pieces. All dropped dispensers use either mechanical time or proximity fuzing. These fuzes allow the payload to be dispersed at a predetermined height above the target. Multiple-piece dispensers open up and disperse their payload when the fuze functions. Single-piece dispensers eject their payload out of ports or holes in the body when the fuze functions.

Attached Dispensers

These dispensers stay attached to the aircraft and can be reloaded and used again. Their payload is dispersed out the rear or from the bottom of the dispenser. See Figure 2-11, page 2-11.

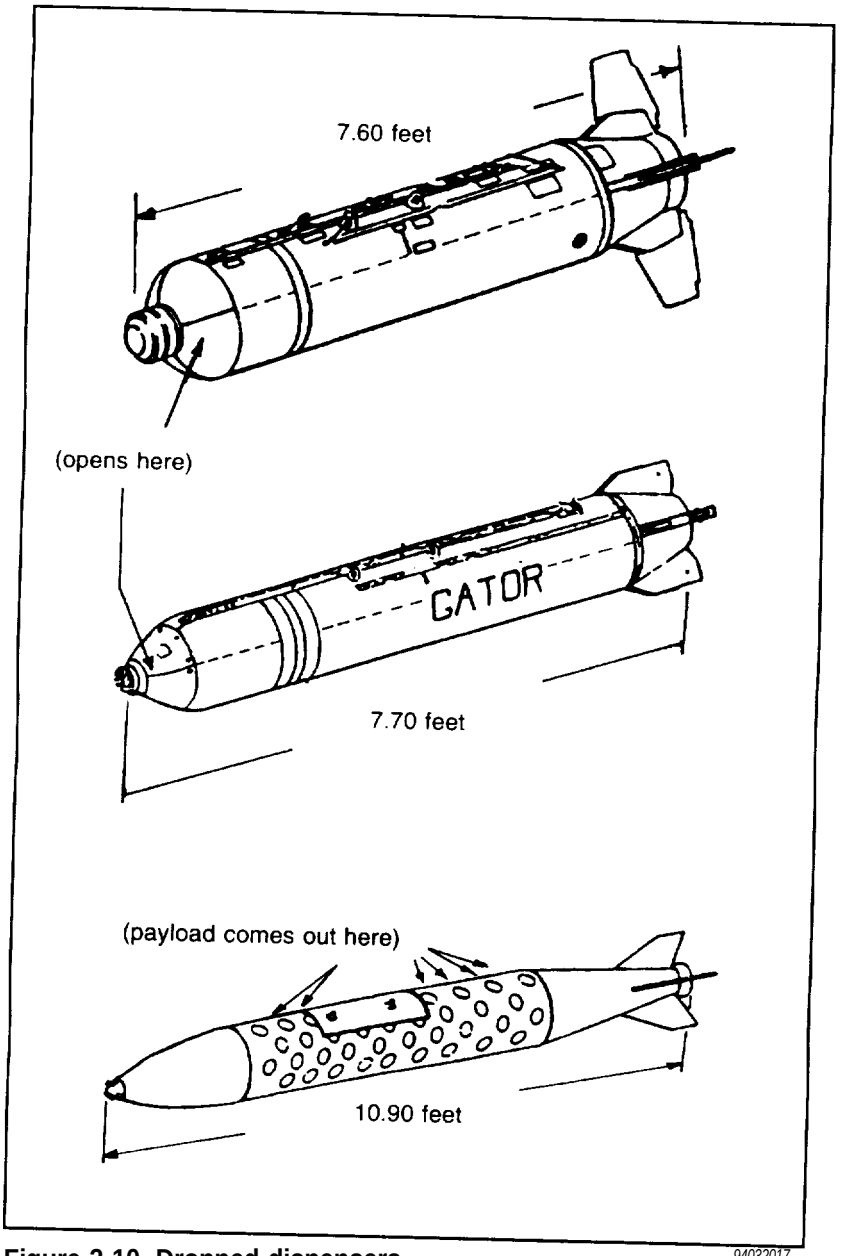

Figure 2-10. Dropped dispensers.

94032017

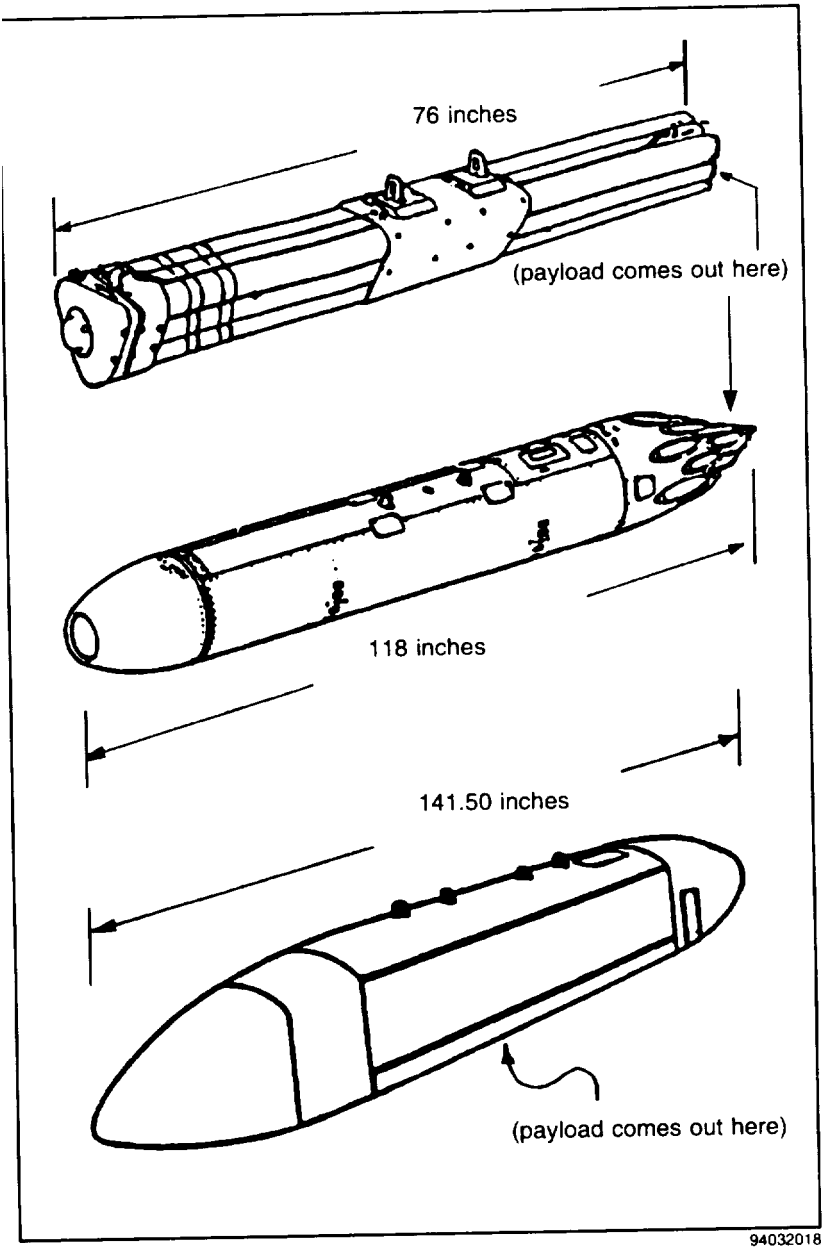

Figure 2-11. Attached dispensers.

SUBMUNITIONS

Submunitions are classified as either bomblets. grenades, or mines. They are small explosive-filled or chemical-filled items designed for saturation coverage of a large area. They may be anti-personnel (APERS), antimateriel (AMAT), antitank (AT), dual-purpose (DP), incendiary, or chemical. Submunitions may be spread by dispensers, missiles, rockets, or projectiles. Each of these delivery systems disperses its payload of submunitions while still in flight, and the submunitions drop over the target. On the battle-field, submunitions are widely used in both offensive and defensive missions.

Submunitions are used to destroy an enemy in place (impact) or to slow or prevent enemy movement away from or through an area (area denial). Impact submunitions go off when they hit the ground. Area-denial submunitions, including FASCAM, have a limited active life and self-destruct after their active life has expired.

The major difference between scatterable mines and placed mines is that the scatterable mines land on the surface and can be seen. Placed mines, discussed in a later section, may be hidden or buried under the ground and usually cannot be seen.

The ball-type submunitions shown in Figure 2-12 are APERS. They are very small and are delivered on known concentrations of enemy personnel. The submunition shown in Figure 2-13 is scattered across an area. Like a land mine, it will not blow up until pressure is put on it.

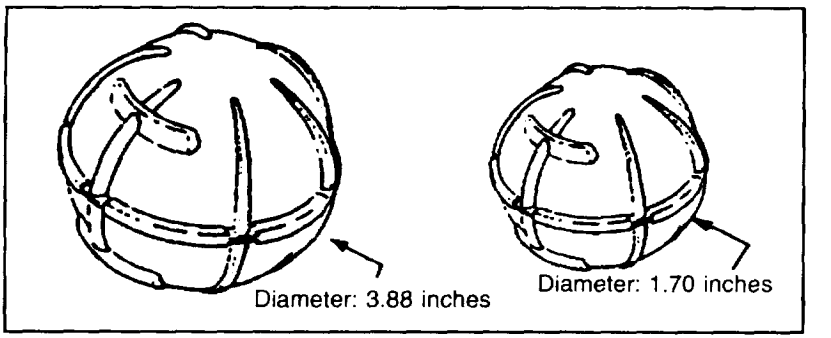

94032019

Figure 2-12. APERS ball-type submunitions.

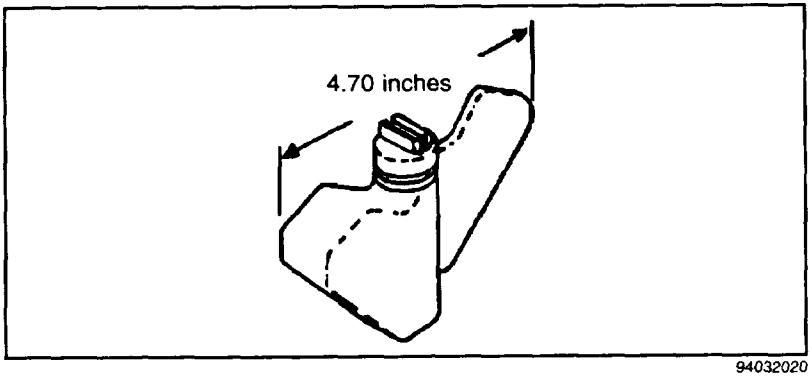

Figure 2-13. APERS pressure-activated submunition.

The APERS submunition shown in Figure 2-14 can be delivered by aircraft or by artillery. When it hits the ground, a small fragmentation ball shoots up and detonates about 6 feet above the ground. The submunitions shown in Figure 2-15, page 2-14, are area-denial APERS submunitions (FASCAM). These submunitions are delivered into areas for use as mines. When they hit the ground, trip wires kick out up to 20 feet from the mine. All area-denial submunitions use antidisturbance fuzing with self-destruct fuzing as a backup. The self-destruct time can vary from a couple of hours to as long as several days.

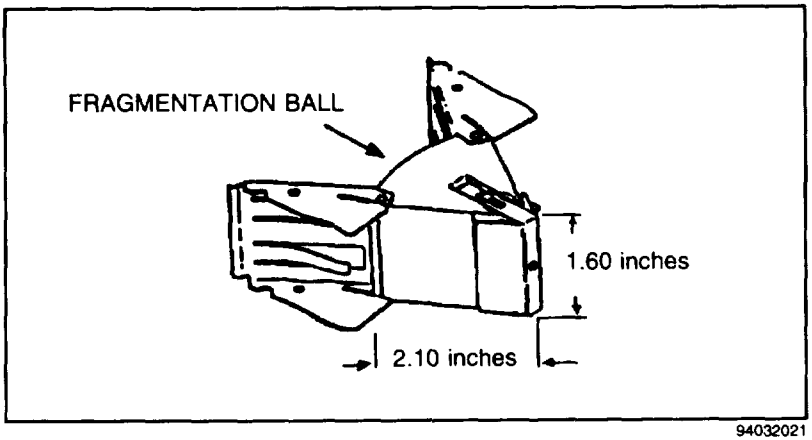

Figure 2-14. APERS bounding-fragmentation submunition.

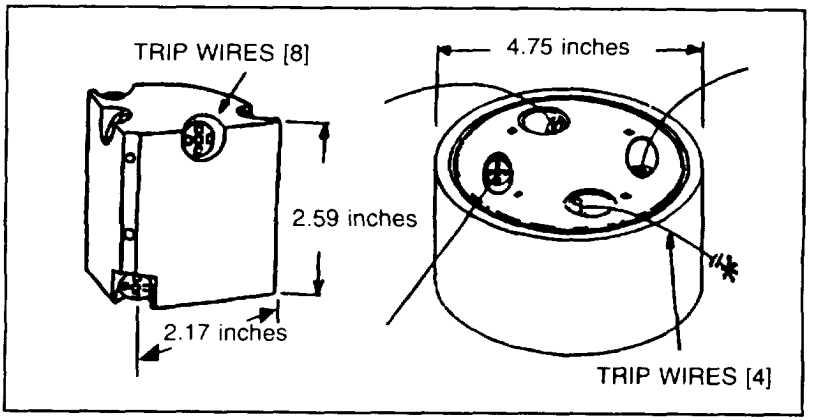

Figure 2-15. APERS area-denial submunitions (FASCAM).

The DP submunition shown in Figure 2-16 has a shaped charge for penetrating hard targets but is also used against personnel. These submunitions are delivered by artillery or rockets. The arming ribbon serves two purposes: it not only arms the fuze as the submunition comes down. but it also stabilizes the submunition so that it hits the target straight on.

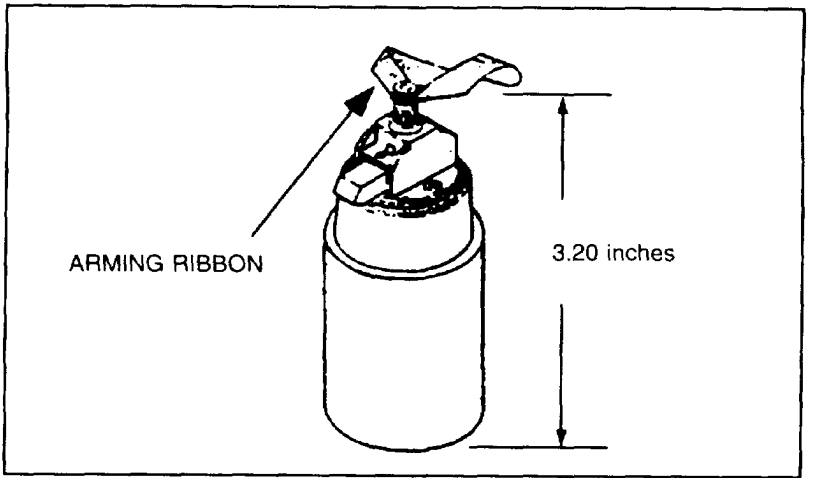

Figure 2-16. DP submunition.

The AMAT and/or AT submunitions shown in Figure 2-17 are designed to destroy hard targets such as vehicles and equipment. They are dispersed from an aircraft-dropped dispenser and function when they hit a target or the ground. Drogue parachutes stabilize these submunitions in flight so they hit their targets straight on. The submunitions shown in Figure 2-18 are also used to destroy hard targets such as vehicles and equipment. The only difference is that the fin assembly stabilizes the submunition instead of the drogue parachute.

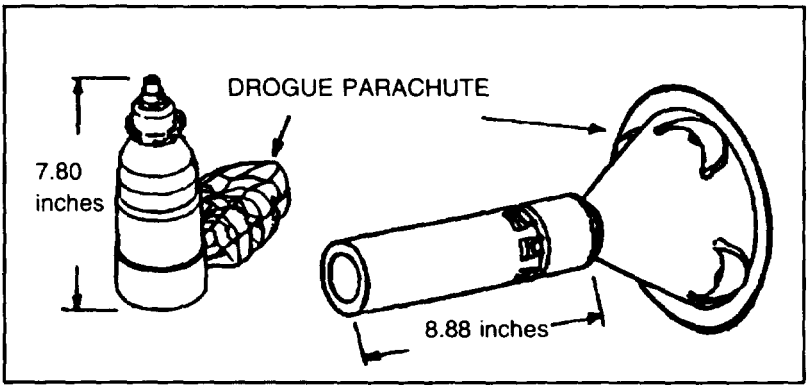

Figure 2-17. AMAT/AT parachute-stabilized submunitions.

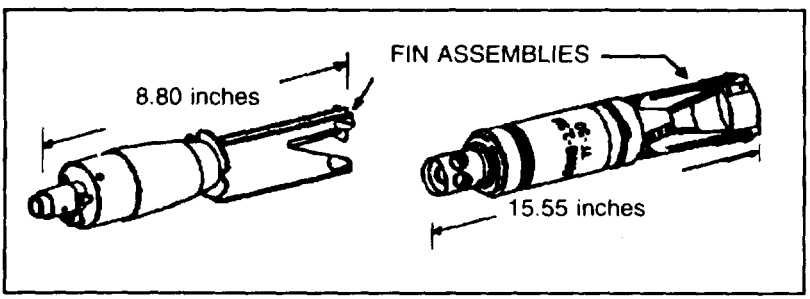

Figure 2-18. AMAT/AT fin-stabilized submunitions.

AT area-denial submunitions (Figure 2-19, page 2- 16) can be delivered by aircraft, artillery, and even some engineer vehicles. These FASCAMs all have magnetic fuzing. They will function

when they receive a signal from metallic objects. These submunitions, similar to the APERS area-denial submunitions that are shown in Figure 2-15 on page 2-14, also have antidisturbance and self-destruct fuzing. AT and APERS area-denial mines are usually found deployed together.

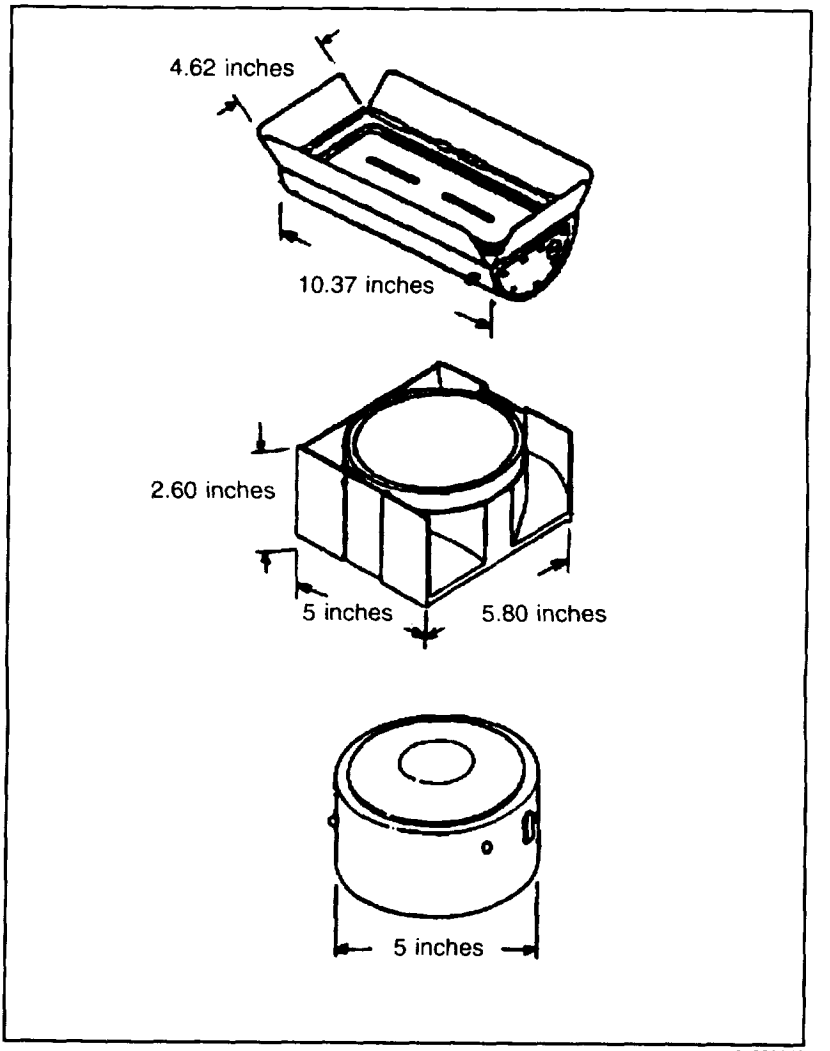

94032026

Figure 2-19. AT area-denial submunitions (FASCAM).

PROJECTED ORDNANCE

All projected ordnance is fired from some type of launcher or gun tube. Photographs and NEWS of projected ordnances are shown in Appendix C. Projected ordnance falls into the following five subgroups:

Ž Projectiles.

Ž Mortars.

Ž Rockets.

Ž Guided missiles.

Ž Rifle grenades.

PROJECTILES

Projectiles range from 20 millimeters to 16 inches in diameter and from 2 inches to 4 feet in length. They can be filled with explosives, chemicals (to include riot-control agents such as CS), white phosphorus (WP), illumination flares, or submunitions. Projectile bodies can be one piece of metal or multiple sections fastened together.

Projectiles, like bombs, can have impact or proximity fuzing. They can also be fuzed with time-delay fuzing that functions at a preset time after firing. For safety reasons, all projectiles should be considered as having proximity fuzing. Getting too close to proximity fuzing will cause the fuze to function, and the projectile will blow up. Depending on the type of filler and the design of the projectile, the fuze can be in the nose, as shown in Figure 2-20, page 2-18, or in the base, as shown in Figure 2-21, page 2-18.

There are two ways projectiles are stabilized, by spin or fin. Spin-stabilized projectiles use rotating bands near the rear section to stabilize the projectile. See Figure 2-22, page 2-19. Riding along the internal lands and grooves of the gun tube, these bands create a stabilizing spin as the projectile is fired. Fin-stabilized projectiles

may have either fixed fins or folding fins. See Figure 2-23. Folding fins unfold after the projectile leaves the gun tube to stabilize the projectile.

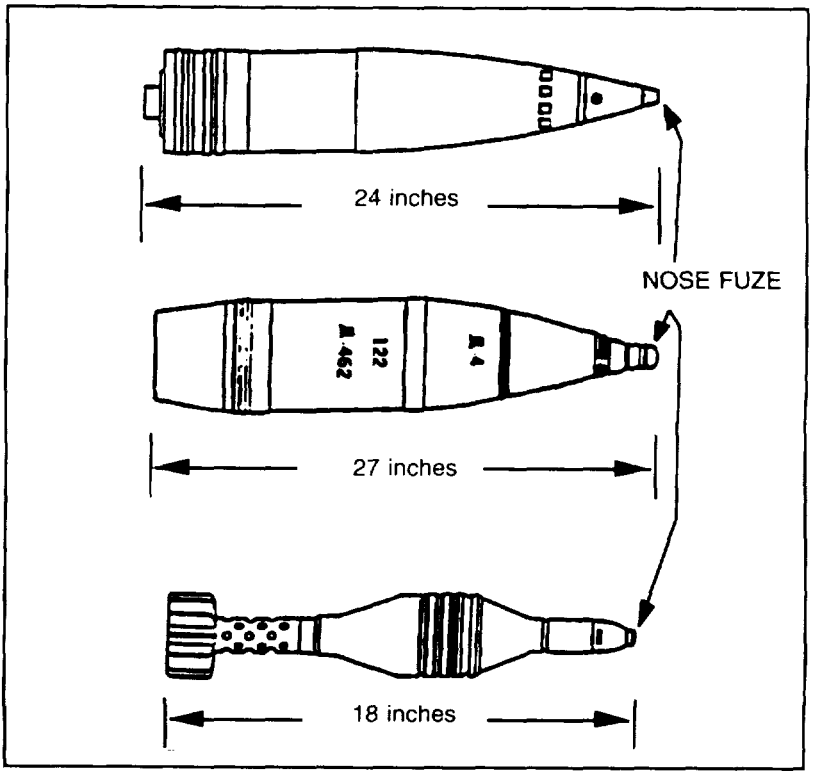

Figure 2-20. Nose-fuzed projectiles.

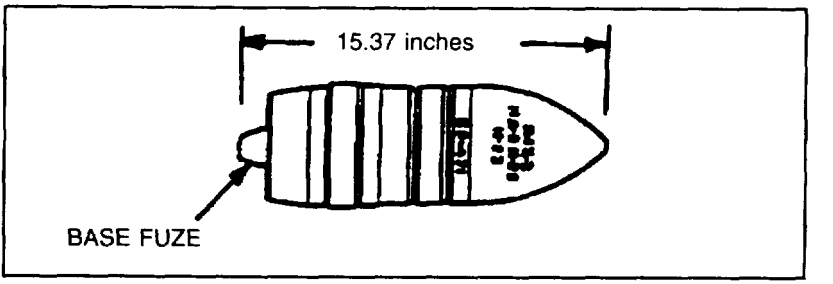

Figure 2-21. Base-fuzed projectile.

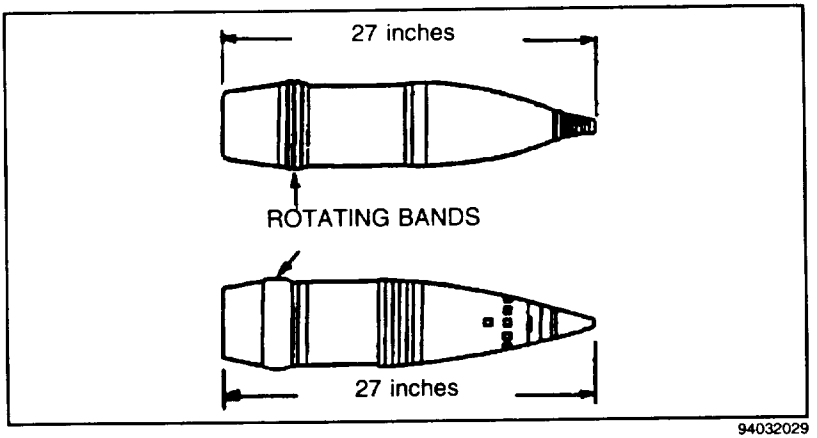

94032029

Figure 2-22. Spin-stabilized projectiles.

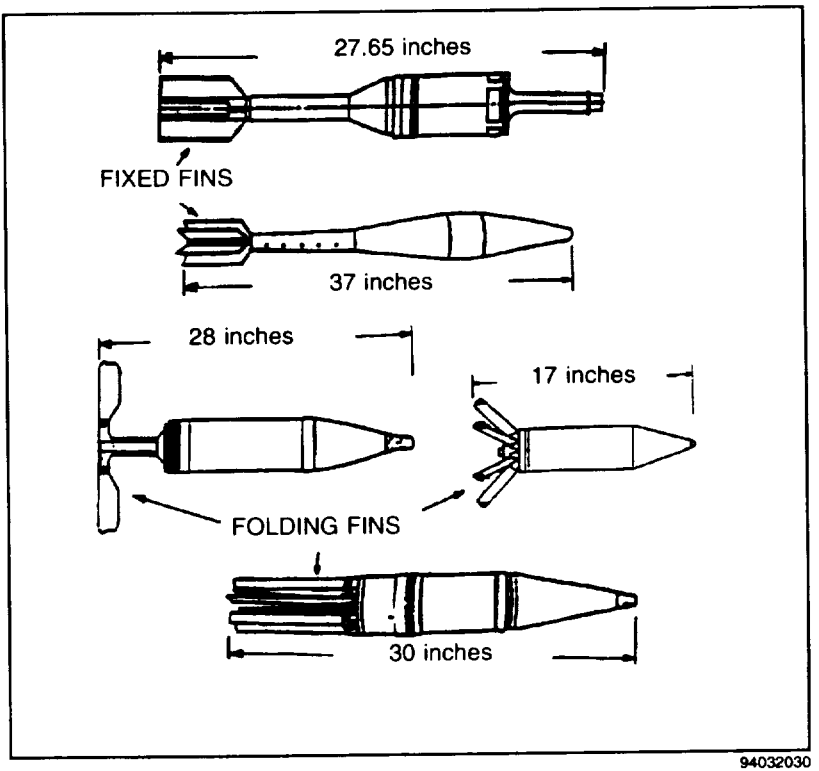

94032030

Figure 2-23. Fin-stabilized projectiles.

MORTARS

Mortars range from 45 millimeters to 280 millimeters in diameter. Like projectiles, mortar shells can be filled with explosives, toxic chemicals, WP, or illumination flares. Mortars generally have thinner metal bodies than projectiles but use the same kind of fuzing. Like projectiles, mortars are stabilized in flight by fin or spin. Most mortars are fin stabilized, like the ones shown in Figure 2-24. Other mortars are spin stabilized as shown in Figure 2-25.

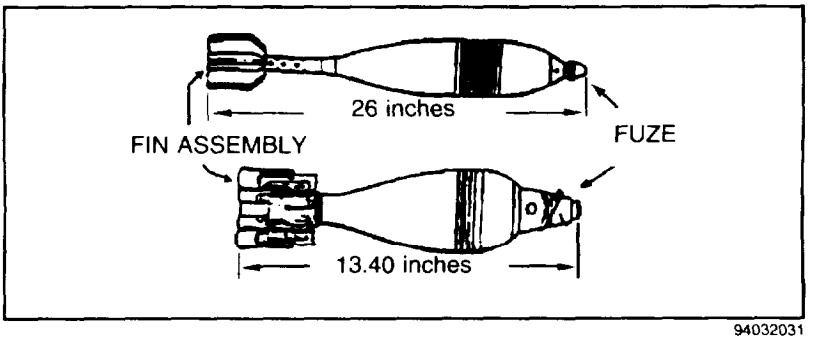

Figure 2-24. Fin-stabilized mortars.

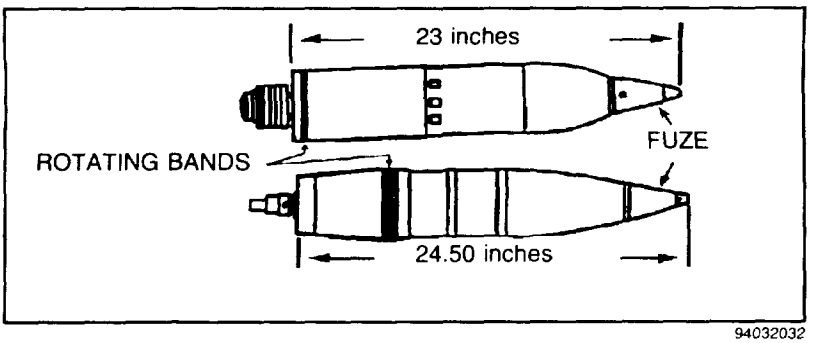

Figure 2-25. Spin-stabilized mortars.

ROCKETS

A rocket may be defined as a self-propelled projectile. Unlike guided missiles, rockets cannot be controlled in flight. Rockets range in diameter from 37 millimeters to over 380 millimeters.

They can range in length from 1 foot to over 9 feet. There is no standard shape or size to rockets, as you can see in Figure 2-26. All rockets consist of a warhead section, a motor section, and a fuze. See Figure 2-27, page 2-22. They are stabilized in flight by fins, or canted nozzles, that are attached to the motor.

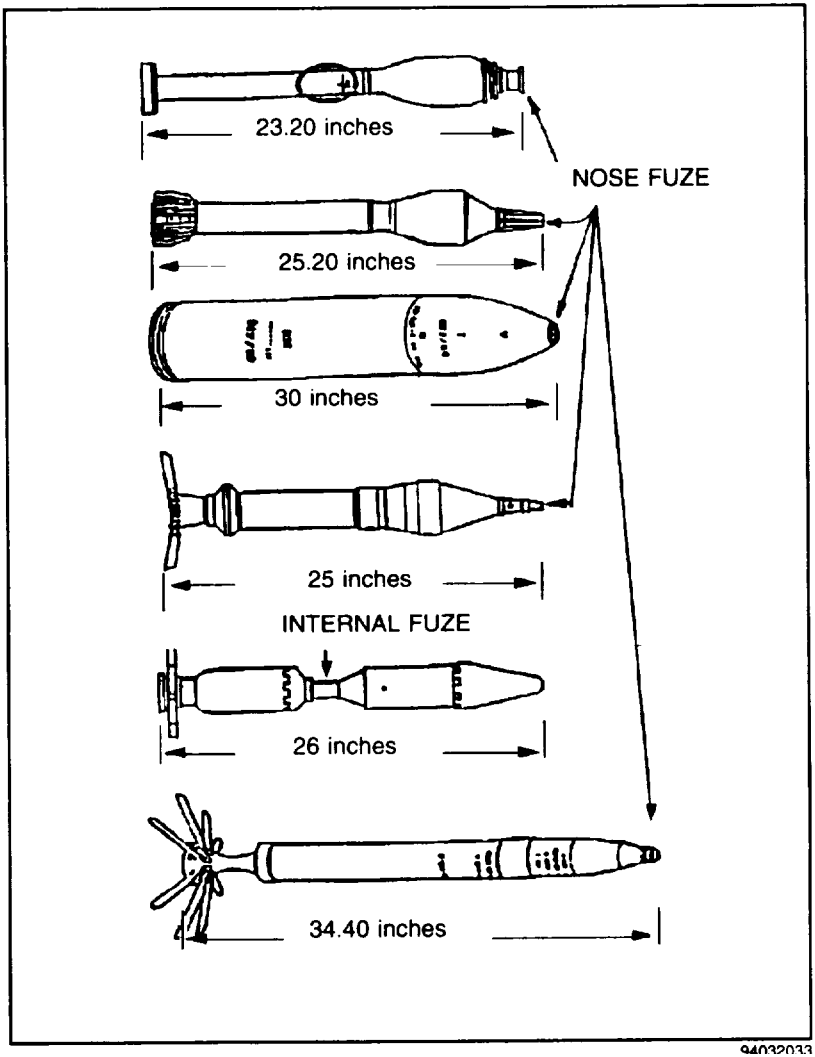

Figure 2-26. Rockets.

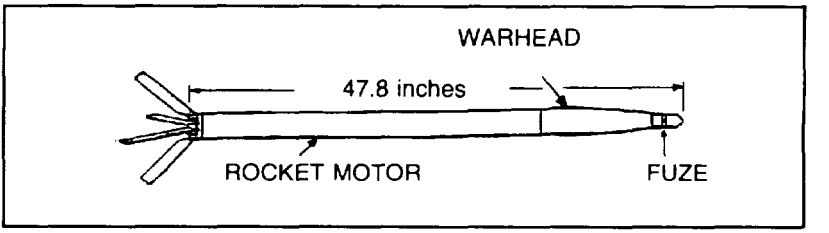

Figure 2-27. Parts of a rocket.

The warhead is the portion of the rocket that produces the desired effect. It can be filled with explosives, toxic chemicals, WP, submunitions, CS, or illumination flares. The motor propels the rocket to the target. The fuze is the component that initiates the desired effect at the desired time. Rockets use the same type of fuzing as projectiles and mortars. The fuze may be located in the nose or internally between the warhead and the motor.

Rockets can be launched or fired from individual weapons (such as the light antitank weapon system), aircraft, mobile-launch vehicles, or stationary launch pads.

Some rockets are spin stabilized. Unlike projectiles and mortars, these rockets do not have rotating bands. Instead, as shown in Figure 2-28, their motor nozzles are slanted to produce the spin. The presence of motor nozzles, or venturies, in the rear of the rocket motor can be used for positive identification purposes for this type of ordnance. Generally, the rocket motor will not create an additional hazard, because the motor is usually burned out shortly after the rocket leaves the launcher.

GUIDED MISSILES

Guided missiles are like rockets in that they consist of the same parts. The difference is that the missiles are guided to their target by various guidance systems. Some of the smaller missiles, such as the tube-launched, optically tracked, wire-guided (TOW) and Dragon missiles are wire-guided by the gunner to their targets. See Figure 2-29.

Larger missiles, such as the phased-array tracking radar intercept on target (PATRIOT) and the Sparrow are guided by radar to their

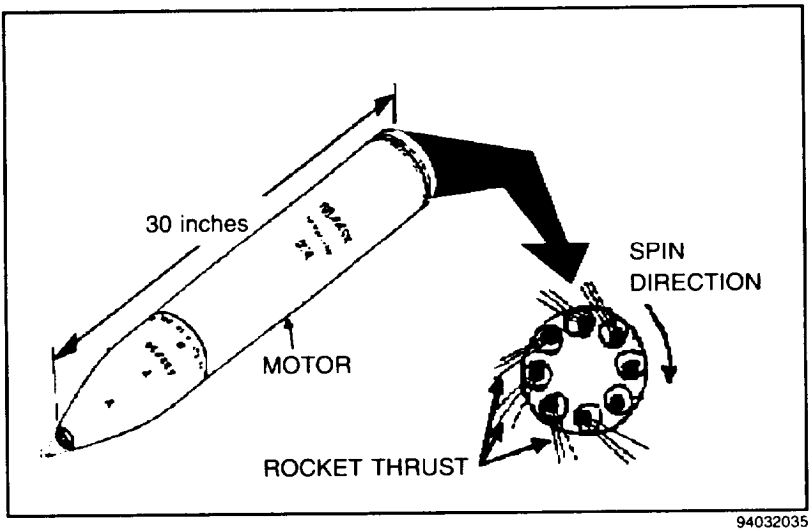

94032035

Figure 2-28. Spin-stabilized rocket.

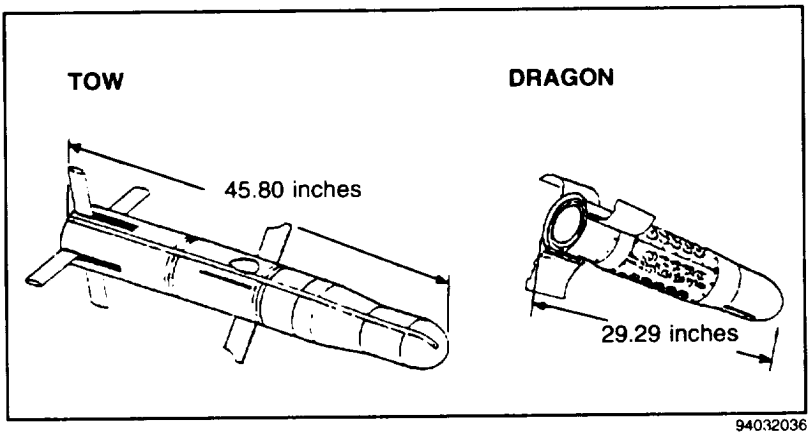

94032036

Figure 2-29. AT guided missiles.

target. See Figure 2-30, page 2-24. The radar may be internal to the missile, like the PATRIOT, or external, like the Sparrow, which uses the airplane's radar system. Guided missiles are usually stabilized in flight by fins that are controlled by internal electronics. Guided missiles use internal, proximity fuzing. Therefore, do not approach any guided missile you find lying on the battlefield.

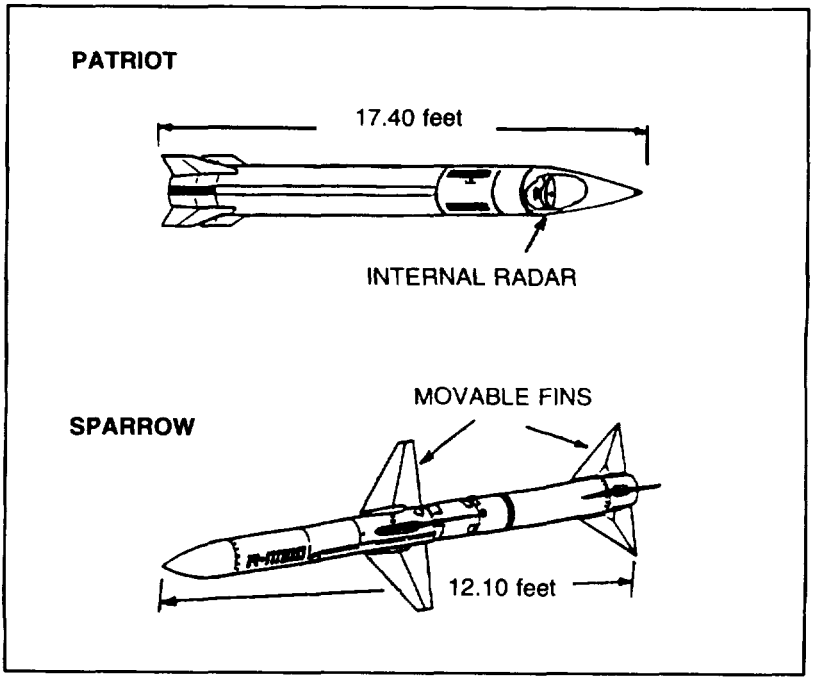

Figure 2-30. PATRIOT and Sparrow guided missiles.

RIFLE GRENADES

Rifle grenades look like mortars and are fired from a rifle that is equipped with a grenade launcher or an adapter. Many countries use rifle grenades as an infantry direct-fire weapon. Some rifle grenades are propelled by specially designed blank cartridges, while others are propelled by standard ball cartridges. Rifle grenades may be filled with high explosives (HEs), WP, CS, illumination flares, or colored screening smoke. They range in size from the small APERS rifle grenade to the larger AT rifle grenade. APERS rifle grenades use impact fuzing. See Figure 2-31. Some rifle grenades, such as the AT, have internal fuzing behind the warhead (Figure 2-32). This type of fuzing still functions on impact with the target.

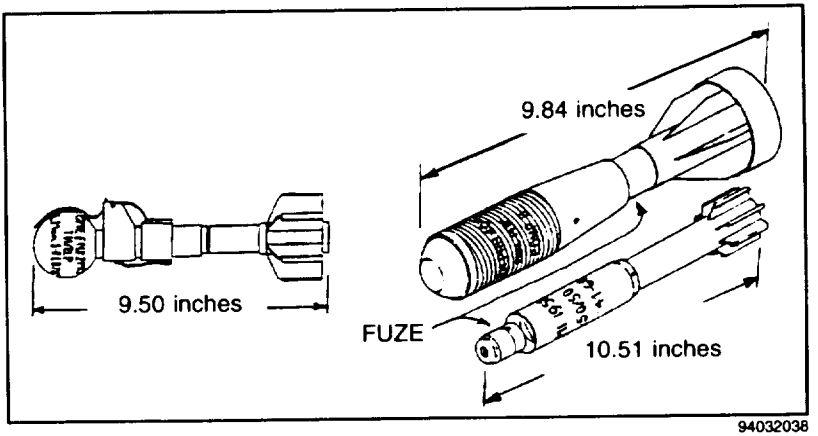

Figure 2-31. APERS rifle grenades.

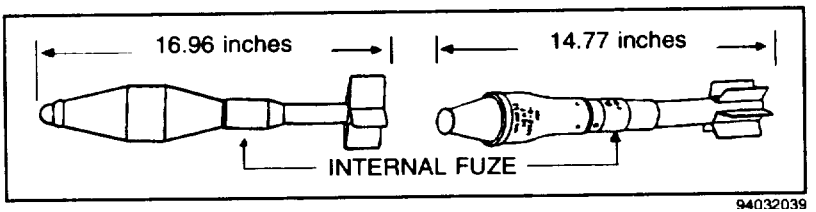

Figure 2-32. AT rifle grenades.

THROWN ORDNANCE

Thrown ordnance, commonly known as hand grenades, can be classified by use as follows:

- Fragmentation (also called defensive).
- Offensive.
- Antitank.
- Smoke.
- Illumination.

Hand grenades are small items that may be held in one hand and thrown. All grenades have three main parts: a body, a fuze with a pull ring and safety clip assembly, and a filler. See Figure 2-33, page 2-26. Never pick up a grenade you find on the battlefield, even if the spoon and safety pin are still attached. All grenades found lying on a battlefield should be considered booby-trapped.

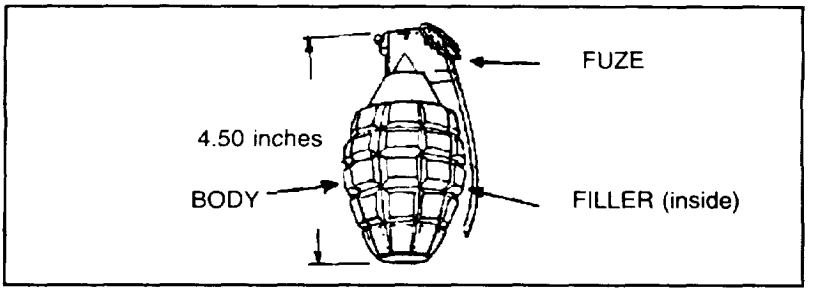

94032040

Figure 2-33. Parts of a grenade.

FRAGMENTATION GRENADES

Fragmentation grenades are the most common type of grenade and may be used as offensive or defensive weapons. See Figure 2-34. They have metal or plastic bodies that hold an explosive filler. These grenades produce casualties by high-velocity projection of fragments when they blow up. The fragmentation comes from the metal body or a metal fragmentation sleeve that can be internal or attached to the outside of the grenade. These grenades use a burning delay fuze that functions 3 to 5 seconds after the safety lever is released.

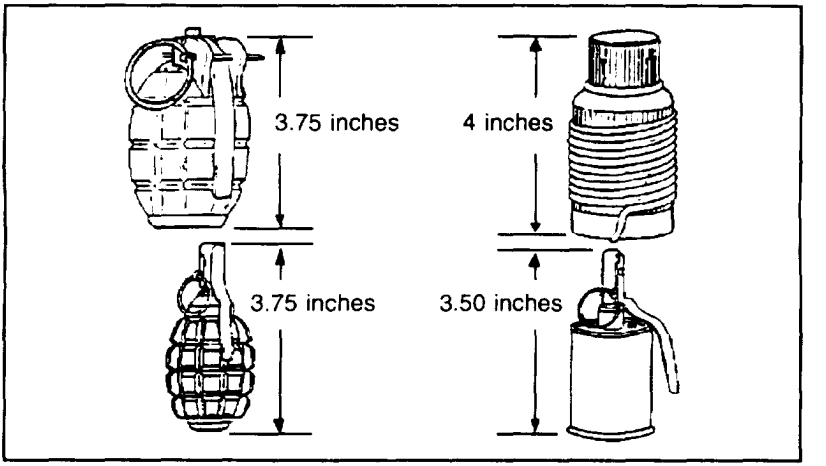

94032041

Figure 2-34. Fragmentation grenades.

OFFENSIVE GRENADES

Offensive grenades have a plastic or a cardboard body. See Figure 2-35. They are not designed to have a lot of fragmentation. Their damage is caused from the over pressure of the explosive blast. These grenades use a burning-delay fuze that functions 3 to 5 seconds after the safety lever is released.

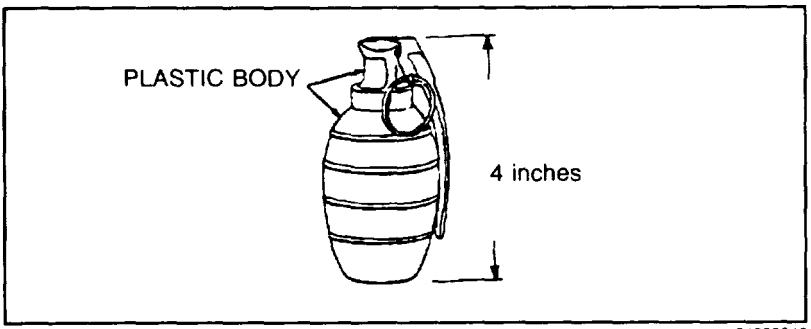

94032042

Figure 2-35. Offensive grenade.

ANTITANK GRENADES

AT grenades are designed to be thrown at tanks and other armored vehicles. They have a shaped-charge explosive warhead and are stabilized in flight by a spring-deployed parachute or a cloth streamer. See Figure 2-36, page 2-28. These grenades use impact fuzing.

SMOKE GRENADES

There are two types of smoke grenades: bursting and burning. See Figure 2-37, page 2-28. They may be made of rubber, metal, or plastic. Bursting-type smoke grenades are filled with WP and blow up when the fuze functions. These grenades use a burning delay fuze that functions 3 to 5 seconds after the safety lever is released. Burning-type smoke grenades produce colored smoke. This type of grenade uses an instant-action fuze. There is no delay once the spoon is released. This is the same type of grenade that is used to dispense not-control agents (such as CS).

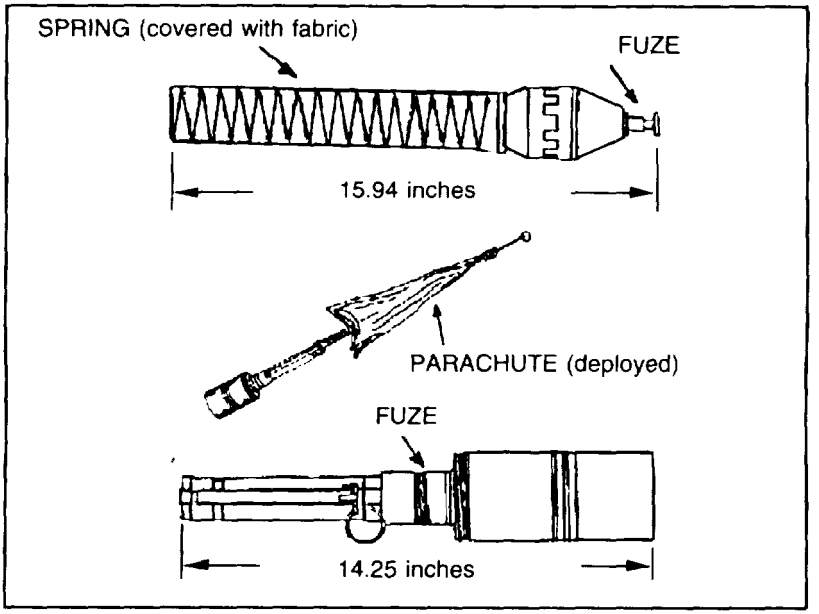

Figure 2-36. AT grenades.

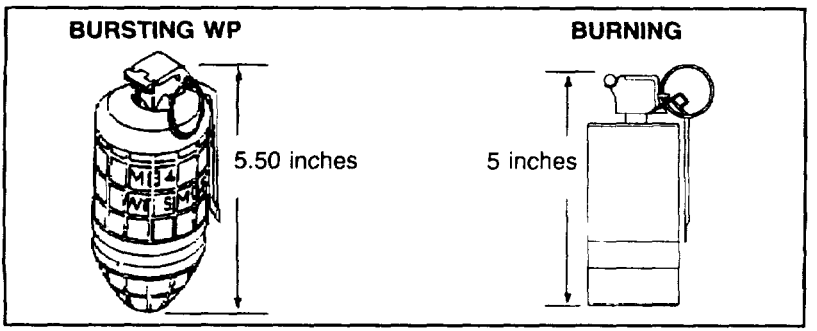

Figure 2-37. Smoke grenades.

ILLUMINATION GRENADES

Illumination grenades are used for illuminating, signaling, and as an incendiary agent. See Figure 2-38. The metal body breaks apart after the fuze functions and dispenses an illumination flare. This

type of grenade uses a burning-delay fuze that functions 3 to 5 seconds after the safety lever is released.

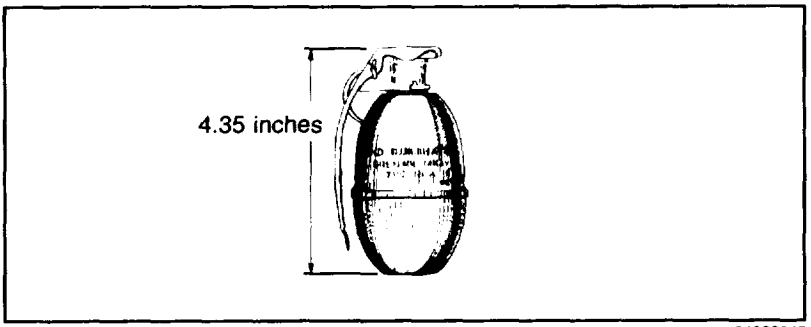

94032045

Figure 2-38. US illumination grenade.

PLACED ORDNANCE

Placed ordnance is commonly referred to as land mines. Land mines may be hidden or buried under the ground and may be classified as APERS or AT. Visual detection of land mines may be difficult at best. If you come to a suspected minefield, report it as a minefield to your commander. All combat arms personnel report a minefield on an obstacle report. For further information and procedures for reporting land mines, refer to FM 20-32. Photographs of placed ordnance and NEWS are in Appendix E.

ANTIPERSONNEL MINES

APERS mines are generally small and come in different shapes and sizes. See Figure 2-39, page 2-30. Some APERS mines are even made of wood, for example, the box mine shown in Figure 2-39. Some APERS mines are designed to function when stepped on, such as those shown in Figure 2-39. Other APERS mines are designed for use as booby traps. See Figure 2-40, page 2-30. These mines are set up to function by using a trip wire laid out across a path or road. When the trip wire is pulled or cut, the fuze functions. Some APERS mines, such as the US claymore mine, may be set up to function by command detonation.

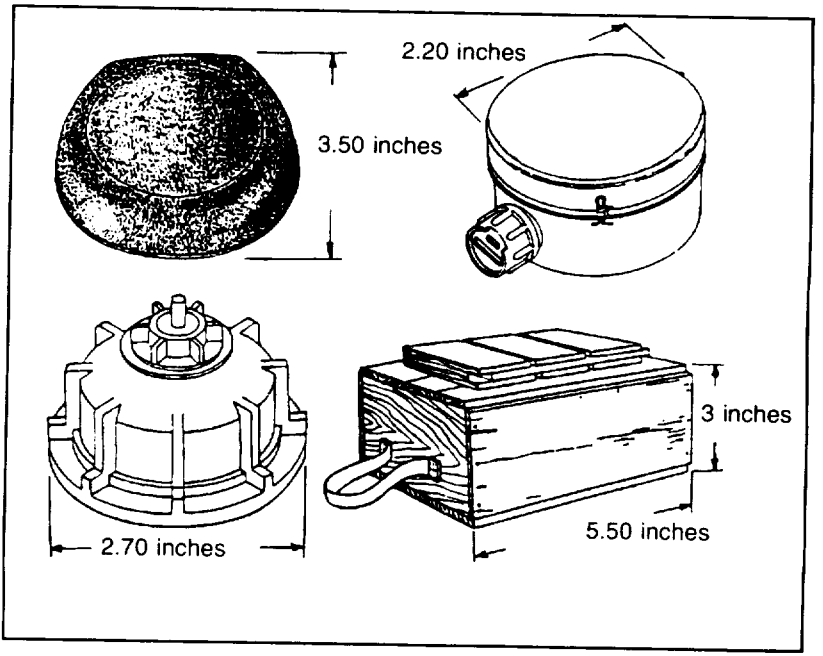

Figure 2-39. APERS pressure-fuzed mines.

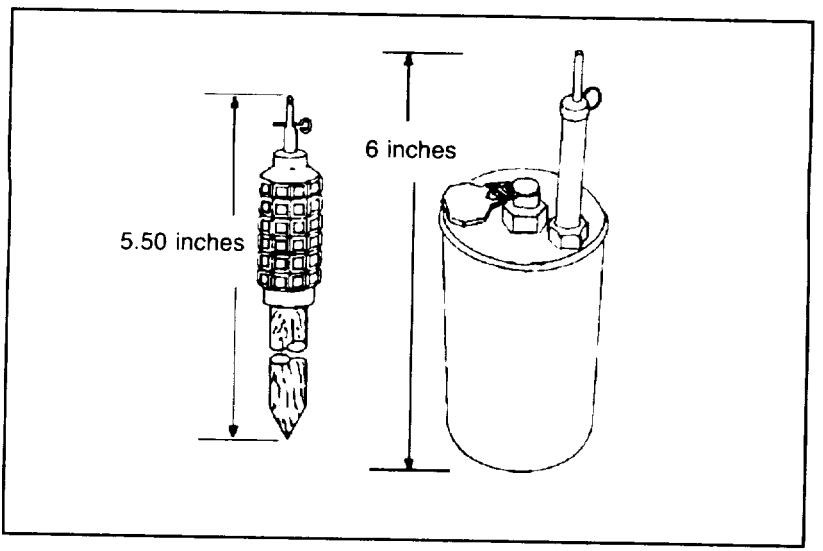

Figure 2-40. APERS trip wire-fuzed mines.

ANTITANK MINES

AT mines are much larger than APERS mines and usually have pressure or tilt-rod fuzing. However, some AT mines also use magnetic-sensitive fuzing. Some of the more modem AT mines have plastic bodies, which make them hard to detect with a metallic mine detector. The variety of AT mines shown in Figure 2-41 all function by direct pressure from a tank or vehicle. The mines shown in Figure 2-42, page 2-32, use a tilt-rod fuze that sticks out of the ground. When the rod is moved or pushed over, the mine blows up.

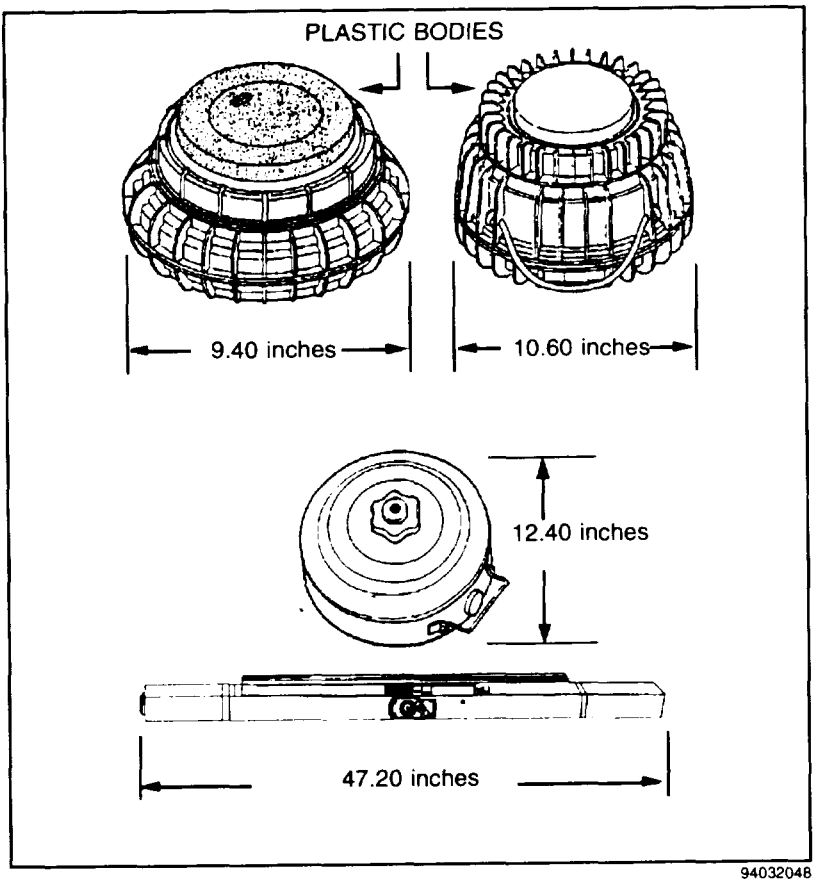

Figure 2-41. AT pressure-fuzed mines.

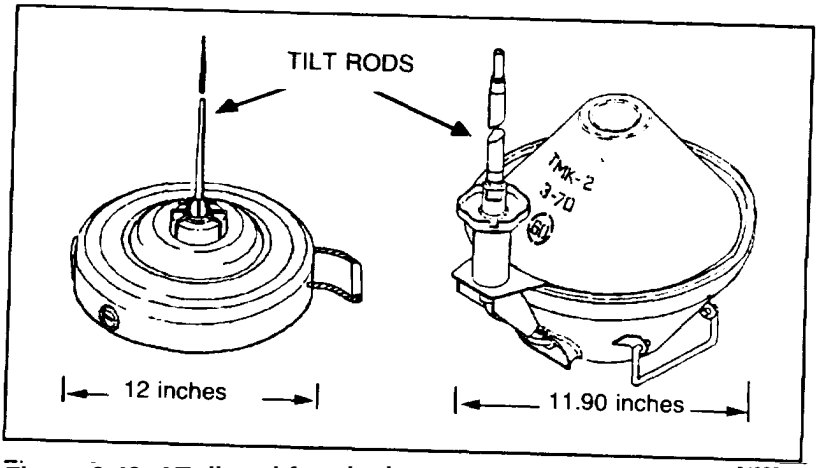

Figure 2-42. AT tilt-rod fuzed mines.

94032049

C H A P T E R 3

TAKE IMMEDIATE ACTION

All UXOs found on the battlefield affect maneuver and mission capabilities. When you find a UXO, you must make some immediate decisions. These decisions will depend on your current mission, the size and location of the UXO, and your unit's capabilities. Figure 3-1 shows a decision chart to help you decide. This information is also in GTA 9-12-1, which is available at your local TASC.

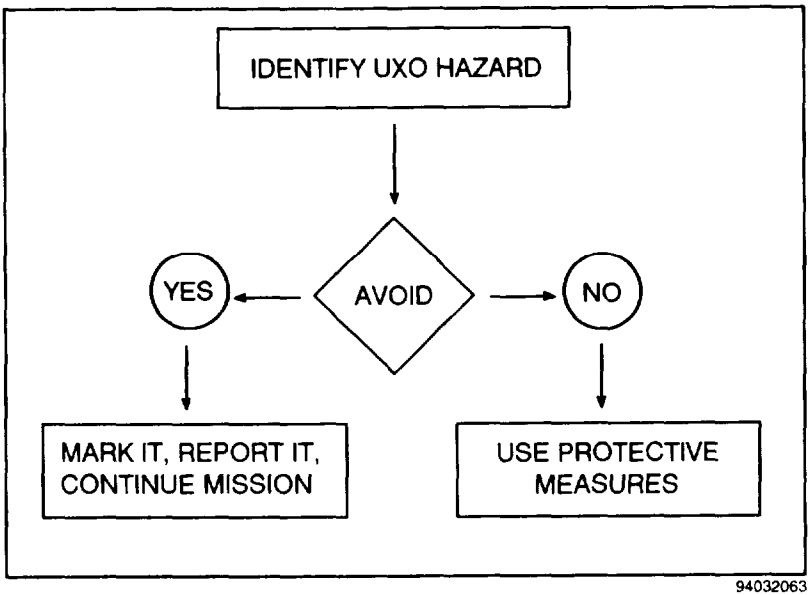

Figure 3-1. Decision chart.

If at all possible, avoiding/bypassing the UXO hazard is the safest option to take for personnel and equipment. If the UXO hazard is left from a recent enemy attack, you must consider protecting your personnel and equipment by extracting them from the area before another attack is targeted on you. See Chapter 5 for extraction procedures.

If the mission cannot be accomplish due to the presence of the UXO and the hazard cannot be avoided/bypassed, protective measures must be taken to reduce the hazard to personnel and equipment.

Regardless of the option you choose, the location of the UXO must be clearly marked with UXO markers and the hazard reported to your next higher headquarters. See Chapter 4 for procedures on reporting a UXO hazard.

PROTECTIVE MEASURES

There are three methods you can use to protect personnel and equipment. You can evacuate, isolate, or barricade them.

EVACUATE

Evacuation of all nonessential personnel and equipment is the best protective measure. The evacuation distances given in Figure 3-2 provide a reasonable degree of safety for unprotected personnel and equipment. These distances are based on your estimate of the amount of explosive filler in the UXO. If protective barricades are used around the UXO, these distances can be reduced.

The general rule for estimating the amount of explosive in an ordnance item is as follows: Assume that 50 percent of the total ordnance weight equals the NEW. For example, a 500-pound bomb would be calculated to have 250 pounds of explosive. According to Figure 3-2, the safe distance for unprotected personnel is 625 meters. Refer to Appendixes B through E for the NEW of general ordnance items.

After all personnel and equipment are evacuated, movement within the area should be kept to essential operations only. If equipment cannot be evacuated, only mission-essential personnel should be allowed in the area. The equipment should be protected by barricades and personnel should wear all protective equipment.

Explosive Weight (pounds)	Evacuation Distance (meters)
27 and less	300
30	310
35	330
40	350
45	360
50	375
100	475
150	550
200	600
250	625
300	675
400	725
500	800

94032064

Figure 3-2. Evacuation distances.

ISOLATE

Sometimes, for mission-related, operational, or other reasons, you cannot evacuate personnel and/or equipment or you cannot leave a particular area. When this happens, you must isolate either your assets (personnel, equipment, and operations) from the UXO or isolate the UXO from your assets.

BARRICADE

If your unit is stationary, evacuate all nonessential personnel and equipment out of the hazard area. Equipment that cannot be moved must be protected with barricades. Personnel who cannot be evacuated from the area must also be protected from the hazard. You can do this by reinforcing the fighting positions on the side facing the hazard and by adding overhead cover.

A barricade is an artificial barrier that provides limited protection by channeling the blast and fragmentation from the threatened area. Barricades may also be used to lessen the effect of the blast and to reduce the size of the evacuation area.When determining if

barricades are needed, you must estimate the probable damage that would result if the UXO were to explode. Building artificial barricades is very time consuming and requires a large number of sandbags. Depending on the size of the UXO, barricades can be built around the UXO to protect the entire area, or they can be built next to the equipment or areas that cannot be evacuated.

Use the following general guidelines when building barricades:

- Clculate the total destructive power of the UXO hazard. Multiply the number of items by their NEW.
- Detemine which assets cannot be moved or evacuated from the area safely. For those assets that cannot be moved or evacuated, decide on the type of barricade(s) you will need to protect your assets.
- Determine how mny personnel are available to help build barricades. Use the absolute fewest personnel. Determine what equipment you can use. If earth-moving equipment is available, you can build earth barriers in place of sandbag barricades.
- Caculate the number of sandbags you will need or that are already available to build barricades. Personnel evacuated from the UXO area can fill sandbags and transport them to the barricade site.
- Make sure that all personnel actually building barricades are wearing all available safety equipment, This safety equipment includes a kevlar helmet, a flak vest, and hearing protection.

Placement and Size of Barricades

The barricade should be built no closer to the UXO than the height for the barricade plus 3 feet. Further guidance on the height for barricades is provided later in this section. For example, the barricade shown in Figure 3-3 is 5 feet tall. By adding an additional 3 feet, the barricade is built no closer than 8 feet to the UXO.

When possible, build the barricade between the building and/or the equipment to be protected and the UXO. By positioning the

barricade in this location, personnel who are in or around the building or who are using the equipment will be afforded the greatest protection from the blast and flying fragments. See Figure 3-4.

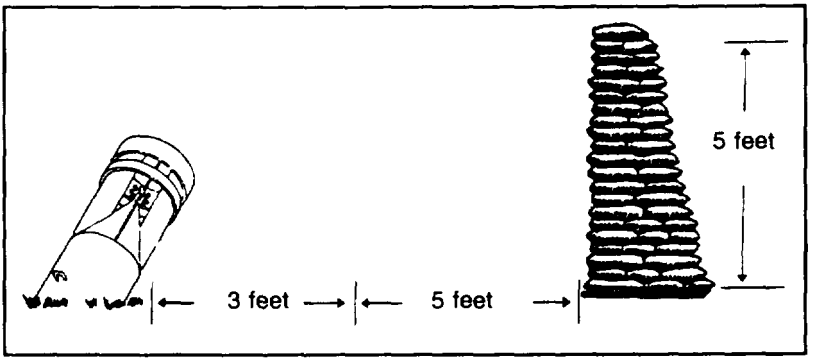

94032050

Figure 3-3. Placement distance for barricade.

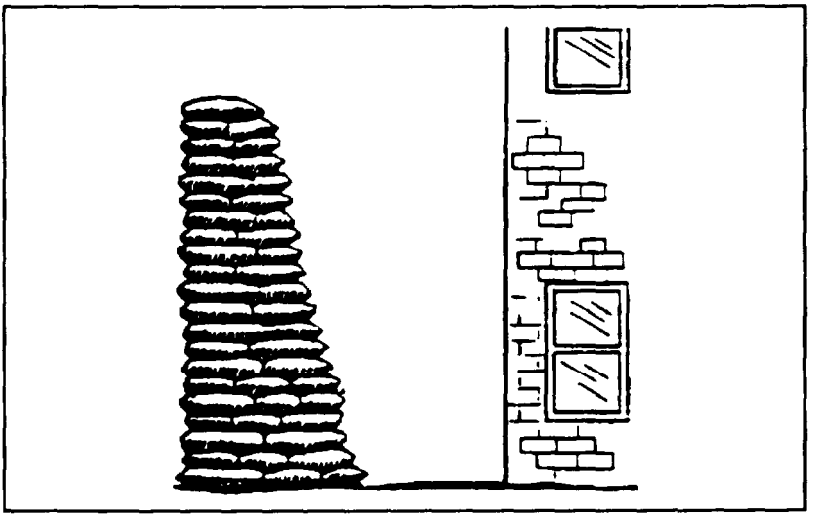

94032051

Figure 3-4. Placement of wall barricade.

When building a barricade, the sandbags must be interlocked for stability. See Figure 3-5, page 3-6. Sandbags that are not interlocked will reduce protection and make the barricade unstable.

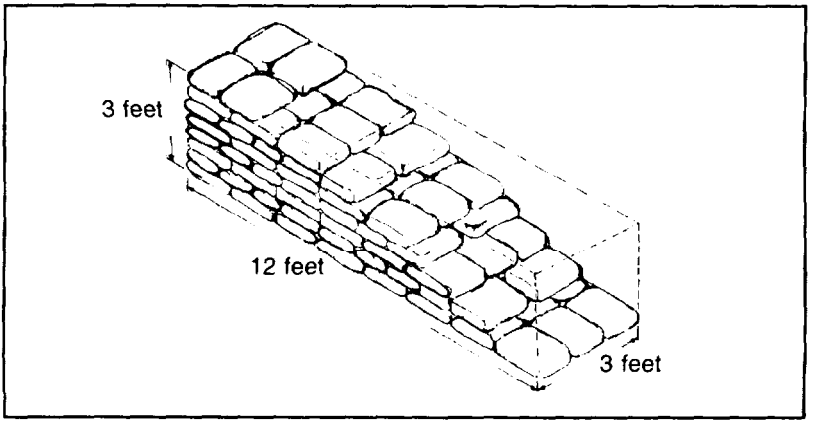

94032052

Figure 3-5. Interlocking sandbags.

Small UXO. For small UXOs such as missiles and rockets less than 70 millimeters in diameter, for projectiles less than 75 millimeters in diameter, and for submunitions and grenades, a double-wall thickness of sandbags should surround the area of the UXO. The sandbags must be stacked to a height of at least 3 feet and should be thick enough to protect personnel and equipment from the blast and fragmentation. This type of barricade may be semicircular or circular. Types of barricades are discussed later in this section.

Medium UXO. For medium-sized UXOs such as missiles, rockets, and projectiles up to 200 millimeters in diameter, and for large-sized placed munitions on the surface, a four- or five-wall thickness of sandbags should surround the area. The sandbags must be stacked to a height of at least 5 feet in order to protect assets. This type of barricade is usually semicircular.

Large UXO. Large UXOs such as projectiles, missiles, and general-purpose bombs are too large for effective barricades to be built around them. In these cases, equipment and personnel activity areas would need to be barricaded. A wall barricade between the affected area and the UXO hazard provides the best and easiest protection.

Barricade Types

The three types of barricades are circular, semicircular, and wall. The type barricade that you use will depend on the UXO hazard and the area that requires protection.

Circular. A circular barricade is the best choice for small UXO hazards, because it provides complete protection for personnel and equipment. A circular barricade that is 8 feet in diameter, 3 feet tall, and 3 sandbags thick would require approximately 400 sandbags. The barricade shown in Figure 3-6 will force the blast and

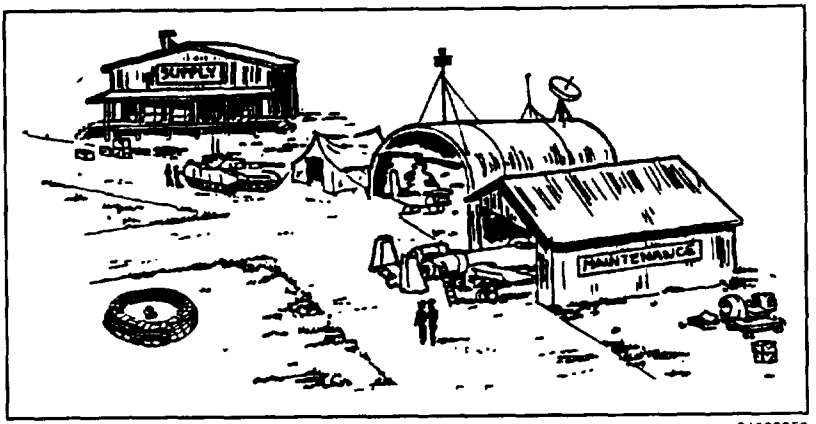

94032053

Figure 3-6. Complete circular placement of barricade.

Semicircular. A semicircular barricade is used for small- and medium-sized UXO hazards. It will channel the blast and fragmentation through the open side and away from the protected area. See Figure 3-7, page 3-8.

Wall. The wall barricade protects specific equipment or personnel areas. It is used when the UXO hazard is too large to contain by using a circular or semicircular barricade. The number of wall barricades you need will depend on how much equipment or how many personnel you must protect. A wall barricade that is 12 feet long, 6 feet high, and 3 sandbags thick would require 700 sandbags. As shown in Figure 3-8, page 3-8, the barricade should

extend beyond and be at least as tall as the equipment or personnel areas to be protected. Equipment that is barricaded must still be usable. For example, the radar shown in Figure 3-8 must be left exposed in order to function.

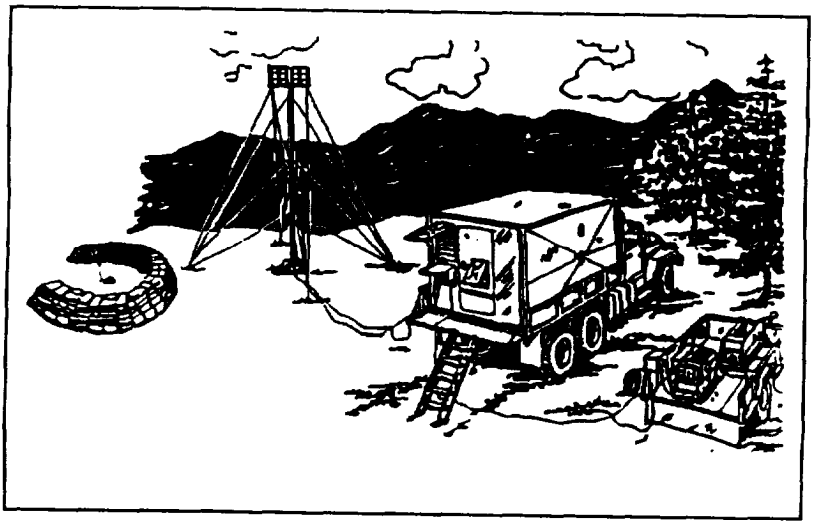

94032054

Figure 3-7. Semicircular placement of barricade.

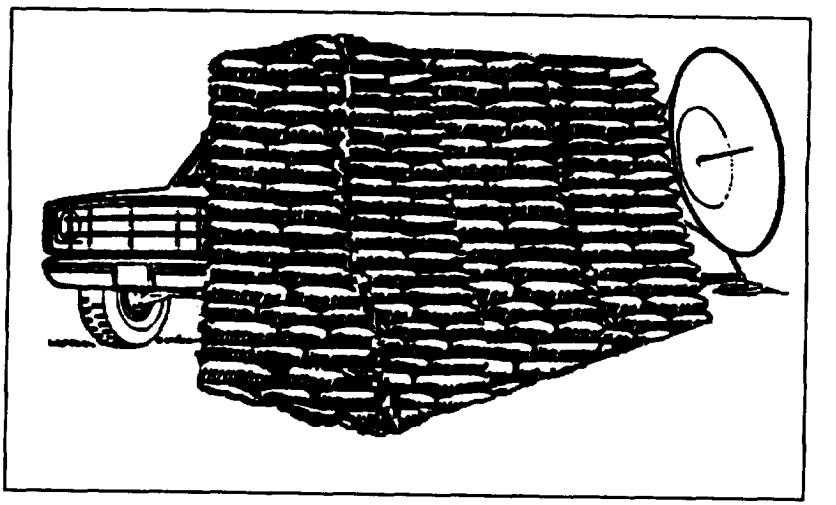

94032055

Figure 3-8. Wall barricade placement.

This item implements STANAG 2002, Edition 7.

MARK UXO

Marking a UXO hazard is just as important as marking other hazard areas such as NBC areas, minefield, and booby-trapped areas. All of these hazards are marked by using triangular signs, if readily available, that by their background color indicate the danger involved. The standard UXO marker is shown in Figure 3-9. The background is red with a white bomb inset. It has the same dimensions as the other markers.

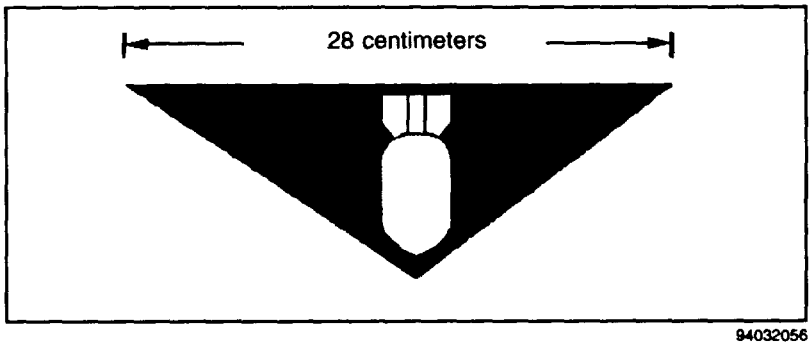

Figure 3-9. Standard UXO marker.

The UXO marker is placed above ground at waist level (about 3 feet) with the bomb pointing down as shown in Figure 3-10, page 3-10. The marker should be placed no closer to the hazard than the point where you first recognized the UXO hazard. The marker should be attached to a stake (Figure 3-10), a tree, or other suitable holder. Just be sure that the marker is clearly visible.

You should also mark all logical approach routes to the area. If the hazard is near a road, as a minimum, put a marker on each side of the road approaching the UXO. If there is a large concentration of UXO hazards such as submunitions, mark the area as you would

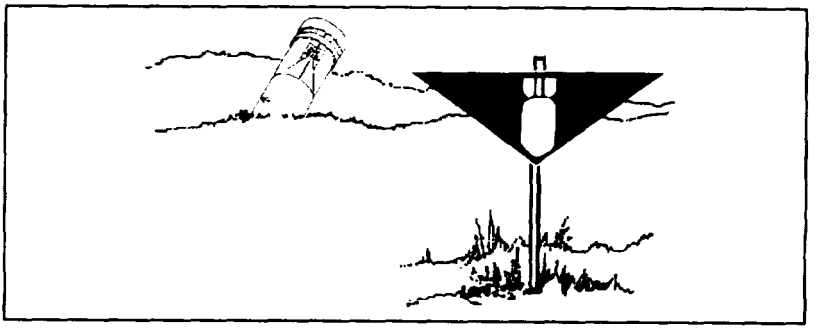

94032057

Figure 3-10. Marking a UXO with standard marker.

a scatterable minefield, with markers placed about every 15 meters around the area. Refer to FM 20-32 for additional information on marking minefield.

As a general rule, the UXO hazard itself must be easily seen from any of the markers. This helps to keep others away from the hazard. It also helps the EOD team to find the hazard.

If standard UXO markers are not available, you may use other suitable materials (such as engineer tape or colored ribbons). Ensure that the same color is used to avoid confusion. When using other materials, the same principles used for the standard markers apply for placement of the makeshift markers. That is, they should be placed about 3 feet off the ground and easily seen from all approach routes. See Figure 3-11.

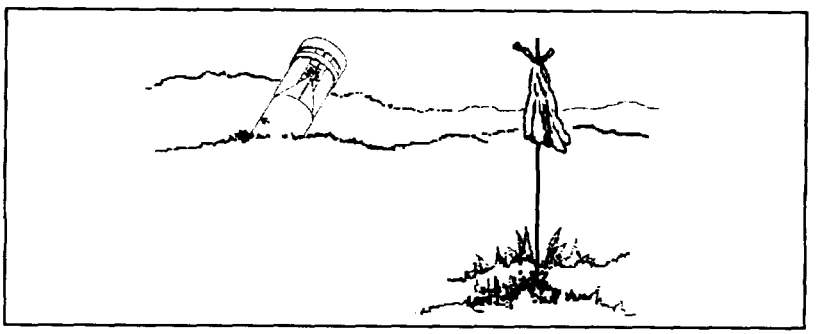

94032058

Figure 3-11. Marking UXO with alternate type of material.

C H A P T E R 4

REPORT THE UXO HAZARD

As discussed in Chapter 1, UXO hazards on the battlefield have an enormous affect on command and control decisions for battle planning. The location of these hazards is vital to the command and control elements when projecting movement and support of combat units. UXO hazards also have a direct impact on the combat capabilities of any element that encounters them. To assist commanders, an effective UXO reporting system must be in place and maintained to allow commanders to concentrate EOD and engineer assets according to priorities and battle plans.

UXO SPOT REPORT

The UXO spot report is a detailed, swift, two-way reporting system that makes clear where the UXO hazard areas are, what their priorities are, and which units are affected by them. The report is used to request help in handling a UXO hazard that is beyond a unit's ability to handle and that affects the unit's mission. This report helps the commander set priorities based on the battlefield situation.

The UXO spot report is the first-echelon report that is sent when a UXO is encountered. Information about this report is also found in GTA 9-12-1 and in the supplemental information section of the signal operating instructions (SOI), where it is just behind the request for medical evacuation (MEDEVAC). The report consists of nine lines. The information must be sent by the fastest means available and the required information provided in the following order:

Line 1. Date-Time Group: DTG item was discovered.

Line 2. Reporting Activity (unit identification code [UIC]) and location (grid of UXO).

Line 3. Contact Method: Radio frequency, call sign, point of contact (POC), and telephone number.

Line 4. Type of Ordnance: Dropped, projected, placed, or thrown. If available, supply the subgroup. Give the number of items, if more than one.

Line 5. NBC Contamination: Be as specific as possible.

Line 6. Resources Threatened: Report any equipment, facilities, or other assets that are threatened.

Line 7. Impact on Mission: Provide a short description of your current tactical situation and how the presence of the UXO affects your status.

Line 8. Protective Measures: Describe any measures you have taken to protect personnel and equipment.

Line 9. Recommended Priority: Recommend a priority for response by EOD technicians or engineers.

Priority	Basis
Immediate	Stops the unit's maneuver and mission capability or threatens critical assets vital to the mission.
Indirect	Slows the unit's maneuver and mission capability or threatens critical assets important to the mission.
Minor	Reduces the unit's maneuver and mission capability or threatens noncritical assets of value.
No Threat	Has little or no affect on the unit's capabilities or assets.

The priority you request must correspond with the tactical situation you described on Line 7 of the report (Impact on Mission). Remember, these priorities refer only to the UXO impact on your

current mission. A priority of Minor or No Threat **does not mean** that the UXO is not dangerous.

PRIORITIZING THE SPOT REPORT

The UXO spot report is forwarded through your chain of command. Each commander in the chain who receives/reviews the report may change the priority to reflect the current tactical situation or projected battle plans. It is the responsibility of each commander in the chain to ensure that UXO spot reports are forwarded through command channels and that the proper priority is set for each report.

If a higher-level commander in the chain changes a priority, all subordinate commanders, especially the commander of the reporting unit, must be told. Commanders must keep the following in mind: even though they may lower a priority, the reporting unit must be able to continue its mission until help comes. In addition to the priority status, all commanders need to be kept informed of the status of each UXO hazard in their area.

The final priority is determined by the reporting unit's higher headquarters that is supported by EOD or engineer units. Based on mission, enemy, terrain, troops, and time available (METT-T), EOD or engineer teams are dispatched to respond to the hazard.

C H A P T E R 5

SELF-EXTRACTION FROM UXO HAZARDS

The use of submunitions and scatterable mines on the modern battlefield will have a direct impact on mobility, survivability, and logistical support requirements. All units must be able to maintain their mobility despite these hazards. Our forces must be able to self-extract from submunition and scatterable mine threats in order to survive.

EOD units are responsible for the elimination of these threats from the battlefield, while engineer elements provide breaching and mine-clearing support for these threats. These elements will not be readily available to all units that receive submunition or scatterable mine at tacks from the enemy. Any unit that cannot self-extract will risk being destroyed in place by follow-on attacks.

DETECTION

Detection is the first step in extraction. Submunitions and scatterable mines are very small in size and are difficult to detect in optimum circumstances. In some terrain, such as dense foliage, tall grass, or uneven ground, many of them will go undetected. During periods of limited visibility or at night, detection is almost impossible. Combat vehicle personnel traveling cross-country in a buttoned-up vehicle will be at a great disadvantage, because they will not be able to see them or to avoid them.

The unit detecting a submunitions area or scatterable minefield is required to mark it, report it, and, if so directed, breach through it. All areas will remain marked until they are cleared.

IMMEDIATE ACTIONS

When an operating area becomes contaminated with submunitions or scatterable mines, a certain amount of confusion is understandable. Therefore, a recognized and rehearsed system of alerting personnel to the danger and orders on how to evacuate the area are essential. Alerting systems may include loudspeakers, radios, or runners. A combination of these systems may be the most effective.

The unit field SOP should include procedures for evacuating personnel from an area and reestablishing operations at another location. An established and trained evacuation plan will reduce personnel and vehicle losses. The plan must be flexible so it can be adapted to fit the different scenarios and environments that might be encountered.

When setting up operational bases or work sites, the UXO threat must be considered. Roads are critical for evacuation. Hard-surfaced roads are the best evacuation routes and are also the easiest to clear. The evacuation plan should include procedures for unit elements to reconnoiter and mark clear paths or to link paths from other unit positions to their position and to the nearest hard-surfaced road.

A unit that has been directly fired on must presume that more fires are coming. The unit must be able to self-extract from the area in order to resume operations or be able to protect assets in order to continue the assigned mission. The extraction procedure resembles an in-stride breach as outlined in FM 20-32 and FM 90-13-1, or in FMFM 13-7 for the Marine Corps. Units that are conducting movement operations can use route clearance procedures to force a cleared lane through the area.

Combat units that have the assets to conduct an in-stride breach can do so and reduce the hazard for follow-on forces and continue in the original direction of the march. Combat support (CS) and combat service support (CSS) units must rely on their operation order (OPORD) to designate alternate support areas. These units must employ their organic assets to reconnoiter and create cleared

lanes in the direction of the alternate support location. Not all equipment may be retrievable. The emphasis should be placed on relocating personnel and operational equipment as quickly as possible.

SITUATIONAL ASSESSMENT

After taking immediate actions to alert personnel, locate the submunitions or scatterable mines, and provide protection for personnel and equipment, the following operational situation and tactical factors should be assessed:

- Effect of the delay on the mission.
- Threat from direct and indirect fire. The risk of casualties from direct or indirect fire may be greater than that from the submunitions or scatterable mines.
- Type of terrain. The terrain determines the effectiveness of submunitions or scatterable mines, their visibility, and, consequently, their ability to be detected, avoided, or neutralized.
- Alternate routes or positions available.
- Degree of protection available.
- Availability of specialized support, such as EOD or engineer teams and equipment.

After assessing the situation, three main options are available, as follows:

- Accept the risk of casualties and continue with the assigned mission.
- Employ tactical breaching procedures and extract to alternate routes or positions.
- Employ preplanned alternate tactical plans according to the current OPORD.

BREACHING TECHNIQUES

Hazardous areas must be bypassed if at all possible. When bypassing is not feasible, you must try to neutralize the submunitions and scatterable mines that prevent movement.

There is no single device or technique that will neutralize every submunition or scatterable mine in every situation. The differences in fuzing, self-neutralization, terrain, and unit mission mean that multiple techniques must be considered.

When employing breaching techniques, take all protective measures possible to protect personnel and equipment. Personnel who are not directly involved should be under cover, away from the area. Personnel who are directly involved must make use of all available cover.

The following extraction techniques should be considered in the order listed:

- Perform area reconnaissance, and mark a cleared route.
- Use engineer equipment to remove or neutralize items.
- Destroy items using explosive charges.
- Destroy items using direct-fire weapons.
- Contain the item by building barricades.
- Move UXO out of the way remotely.

DANGER

Employing breaching techniques on ordnance other than submunitions or scatterable mines is not recommended. The amount of explosives involved would create more of a hazard to your operations than the UXO itself.

WARNING

Prior to employing breaching techniques, make sure that none of the items are filled with chemical or biological agents.

ENGINEER EQUIPMENT (HEAVY-FORCE BREACHING)

Using engineer equipment is the preferred method of breaching small submunitions and scatterable mines. This procedure allows

for the quickest clearance of an evacuation route. Suitable equipment includes a bulldozer or grader, a combat engineer vehicle, and an armored combat engineer earthmover. If an unarmored vehicle is used (such as a bulldozer or a grader), the operator's cab must be protected by sandbags.

Three major disadvantages to heavy-force breaching are as follows:

- Equipment may be damaged or operators injured. If either happens, extraction through the area will be hampered.
- Equipment may only partially clear the area, requiring further clearance procedures.
- Equipment may bury some submunitions or scatterable mines, which would keep them from being detected while using the evacuation route.

EXPLOSIVE CHARGES

Mine-Clearing Line Charge

The mine-clearing line charger (MICLIC) is a rocket-propelled explosive line charge used to reduce minefield containing single-impulse, pressure-activated AT mines and mechanically activated APERS mines. It has limited effectiveness against magnetically activated mines, including scatterable mines and those containing multiple-impulse or delay-time fuzes.

The MICLIC will explosively clear a path through an area. Several MICLICS may be required in the same area to ensure that a wide enough path is cleared.

Three major disadvantages to using MICLICs are as follows:

- The explosive charges may not be close enough to the submunition or scatterable mine to cause destruction. This can result in "kick outs" where submunitions or scatterable mines can be thrown away from the detonation, possibly towards your position.

- Further reconnaissance of the area is required prior to using the route for evacuation in order to detect those submunitions or scatterable mines that are still in place after using MICLIC.
- MICLIC cannot be used if detonation of the submunitions or scatterable mines will cause unacceptable damage.

Hand-Placed Explosive Charges

This is the most effective way to clear an evacuation route. The explosive charges should be placed to the side of the UXO as close as possible without touching it. The explosive charge should be placed to the side of the UXO that is closest to the unit's position. This will direct most of the fragmentation away from the unit. Enough time fuse should be used to allow personnel to return to a safe area prior to the detonation.

Four major disadvantages to using hand-placed charges are as follows:

- They are very labor intensive to use and expose personnel to a greater risk, especially if the submunitions use magnetic, delay, or trip-wire fuzing.
- Their use is very slow and time consuming, because all items must be detected, marked, and destroyed individually.
- They cannot be used if detonation of the submunitions or scatterable mines will cause unacceptable damage to the operational area and/or equipment.
- They should not be used in heavy concentrations of submunitions or scatterable mines. The detonations will cause "kick outs."

DIRECT-FIRE WEAPONS

Submunitions and scatterable mines can be destroyed or disabled by the use of direct-fire service weapons. The goal of this procedure is to produce a disabling reaction that rapidly reduces or eliminates the designed fuze functioning of the submunition or scatterable mine. Service weapons such as the 5.56 millimeter, the

7.62 millimeter, the .50 caliber, and the 25 millimeter will most likely produce the desired effect. The person firing the service weapon should approach the UXO only close enough to be able to fire accurately. However, this person should never be closer than 25 meters to the item. When performing the direct-fire procedure, the aiming point is center mass. Single shots should be fired until the item is hit. On some larger items, multiple hits may be required to be sure that the submunition or scatterable mine has been disabled. Frontal protection is required for mounted and dismounted personnel. Figure 5-1 shows the dismounted procedure, while Figure 5-2, page 5-8, shows the light-vehicle mounted procedure with sandbags being used for frontal protection. If several persons are being used to clear a large area, ensure that each person is protected sufficiently from all areas. No one person should be closer than 25 meters to any item being engaged.

Three major disadvantages to direct-fire destruction are as follows:

- It is very slow and time consuming. Each item must be individually located, and each person can only engage one target at a time.
- Some submunitions are too small to engage effectively with direct-fire weapons from a distance of 25 meters.
- The terrain has a major affect on this procedure. Because submunitions and scatterable mines are so small. it does not take very much vegetation or loose dirt to hide them.

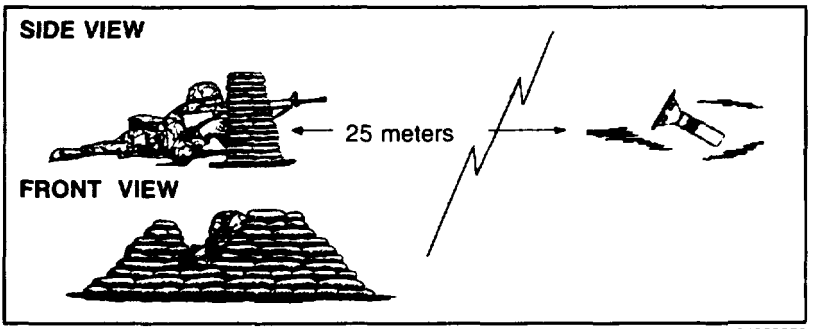

Figure 5-1. Dismounted direct-fire procedure.

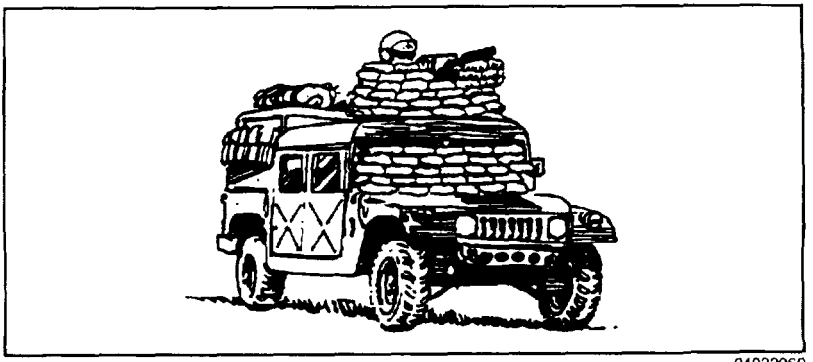

94032060

Figure 5-2. Light-vehicle mounted direct-fire procedure.

CONTAINMENT

Each submunition or scatterable mine contains less than two pounds of explosives. Thus, by using engineer equipment, one or two items can be contained by building barricades or by placing loose fill dirt on top of them. This procedure is recommended for use only where equipment must be recovered and no other procedure is acceptable. Placing fill dirt on top of the UXO may cause a detonation that could damage the equipment or injure the operator.

There is one major disadvantage to containment. Building barri cades is time consuming and thereby exposes a large number of personnel to the UXO.

REMOTE MOVEMENT

If the submunition or scatterable mine must be moved, it must be moved remotely using grapnel hooks, rope, or some other suitable material. To begin this procedure, there must be a distance of at least 50 meters between the person moving the UXO and the UXO itself.

Three major disadvantages to remote movement are as follows:

Ž Movement of the item can cause detonation.

Ž Personnel must approach the item in order to attach necessary materials.

Ž The UXO will he pulled toward the person moving it.

A P P E N D I X A

AMMUNITION COLOR CODES

The color codes and markings in this appendix are for informational purposes only. They are provided to help you identify the different types of UXO. Keep in mind that each country that manufactures munitions has devised its own color codes. Remember, do not approach a UXO any closer than necessary to make an immediate identification. Remember also, that you are not responsible for determining UXO fillers.

The ammunition color codes in Tables A-1 and A-2 are used by the former Soviet Union. The markings used on Soviet chemical munitions are in Table A-3.

Table A-1. Former Soviet Union color codes for bombs.

Nose Band	Body Band	Type
Green	Blue	Fragmentation
Green	Blue and Green	Fragmentation and Chemical
Orange		Semiarmor Piercing
Blue		Armor Piercing
Red	Blue Red	Incendiary Incendiary Dispenser
Red	Green	Persistent Chemical
Green	Green	Nonpersistent Chemical
White	White	Parachute Flare
Blue	Black	Rocket Assisted
Red	White	Practice

Table A-2. Former Soviet Union color codes for projectiles.

Color Codes (Bands)	Type
Red	Incendiary
Blue	Concrete Piercing
Black	Smoke
White	Illumination
Yellow	Ball Shrapnel
Khaki	Bar Shrapnel
One Green Band	Nonpersistent Agent
Two Green Bands	Persistent Agent

Table A-3. Former Soviet Union markings for chemical munitions.

Marking	Chemical Filler
P-4	White Phosphorus
P-5	Mustard Agent
PC	Lewisite Agent
P-10	Phosgene Agent
P-15	Adamsite (DM)
TP	Thermite

The color codes shown in Figure A-1 are those used by the US and other NATO countries.

A P P E N D I X B

DROPPED ORDNANCE IDENTIFICATION AND NET EXPLOSIVE WEIGHTS

BOMBS

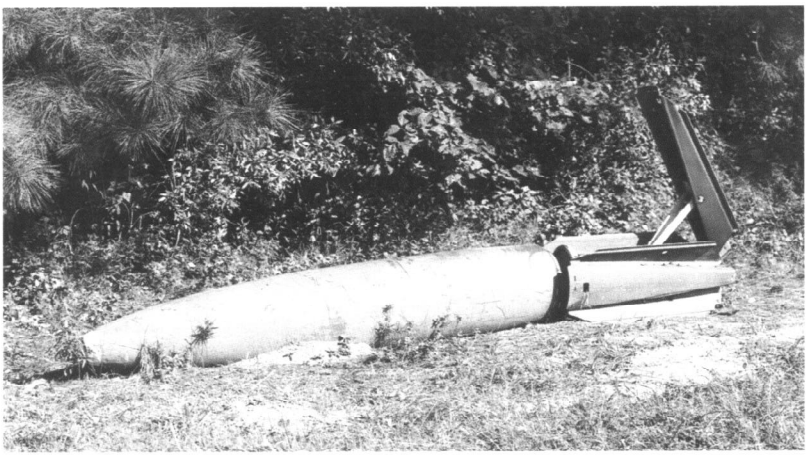

NEW: *1,000 pounds.*

Figure B-1. Bomb, general-purpose, 2,000-pound.

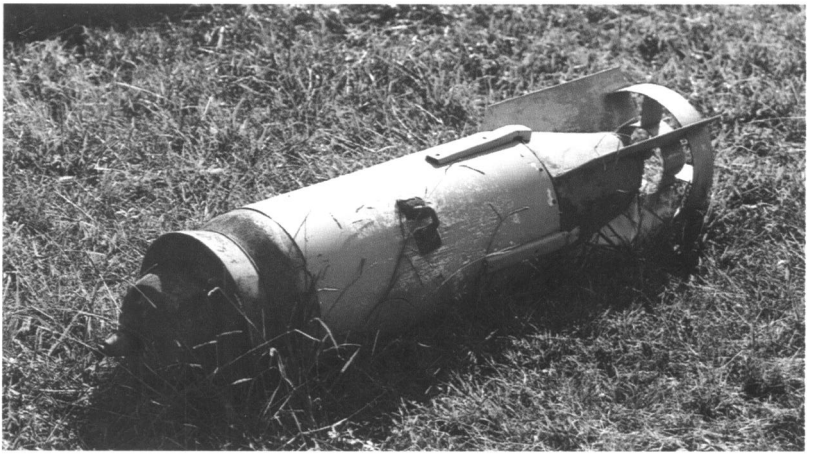

NEW: *550 pounds.*

Figure B-2. Bomb, General-purpose, 500-kilogram.

NEW: *125 pounds.*

Figure B-3. Bomb, general-purpose, 250-pound.

NEW: *110 pounds.*

Figure B-4. Bomb, general-purpose, 100-kilogram.

DISPENSER

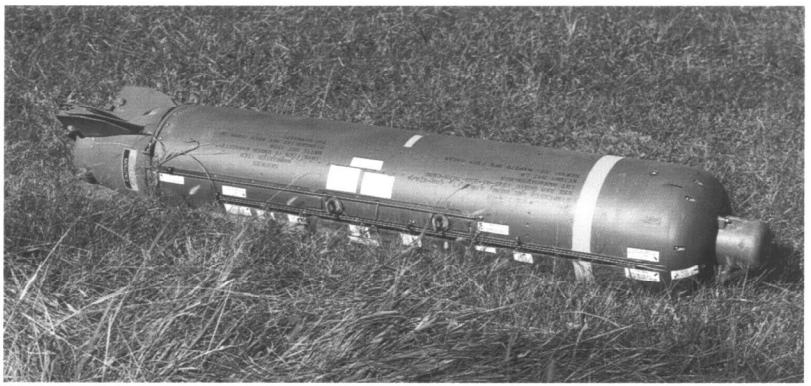

NEW: *Not applicable.*

NOTE: This dispenser is loaded with BLU-97/B submunitions. However, it can be loaded with a variety of submunitions.

Figure B-5. Submunition dispenser, CBU-87/B.

SUBMUNITIONS

NEW: *Less than 0.5 pound per item.*

Figure B-6. APERS/AMAT submunitions.

NEW: *Less than 7 pound per item.*

Figure B-7. APERS/AMAT submunitions (conventional).

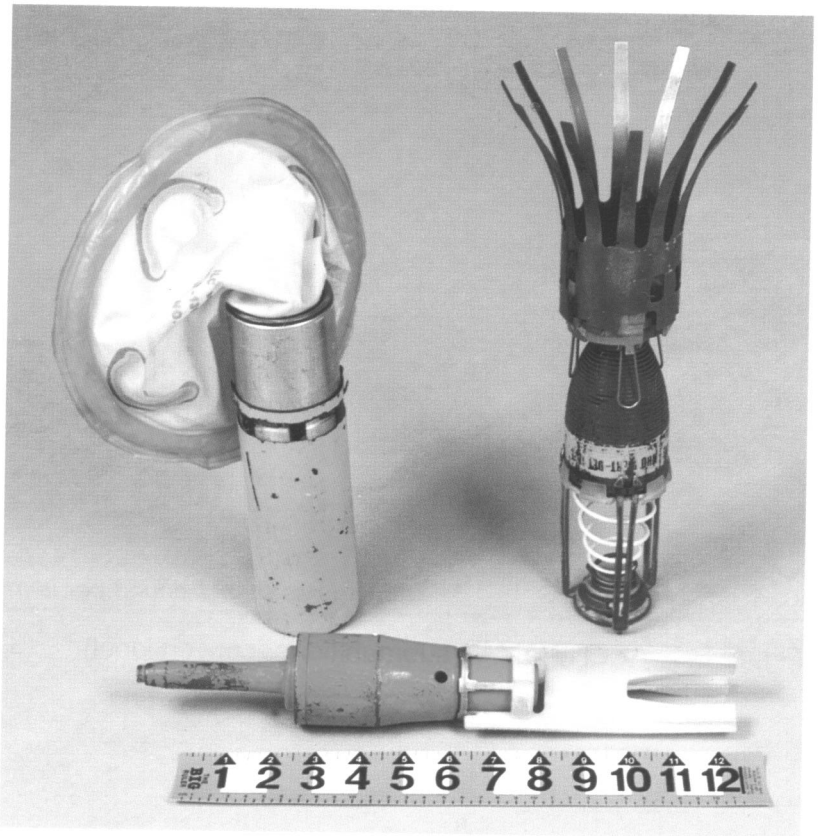

NEW: *Less than 2 pounds per item.*

Figure B-8. AMAT/AT submunitions (conventional).

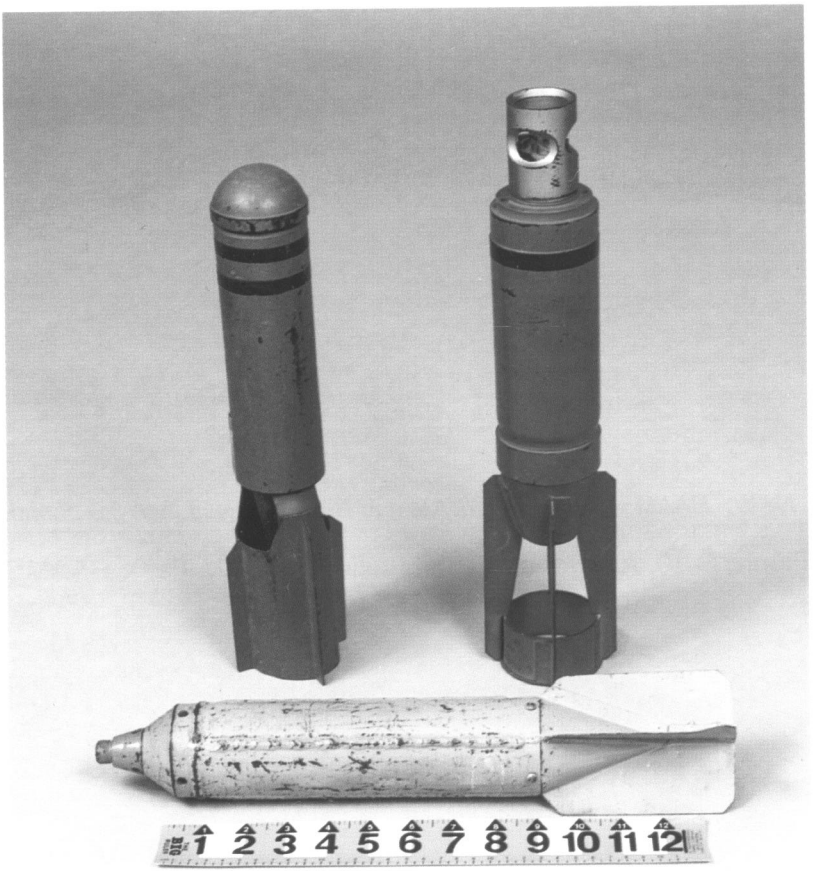

NEW: *less than 2 pounds per item.*
NOTE: *The ZAB (upper left) is an incendiary munition.*

Figure B-9. Soviet-style AMAT/AT submunitions (conven-) tional).

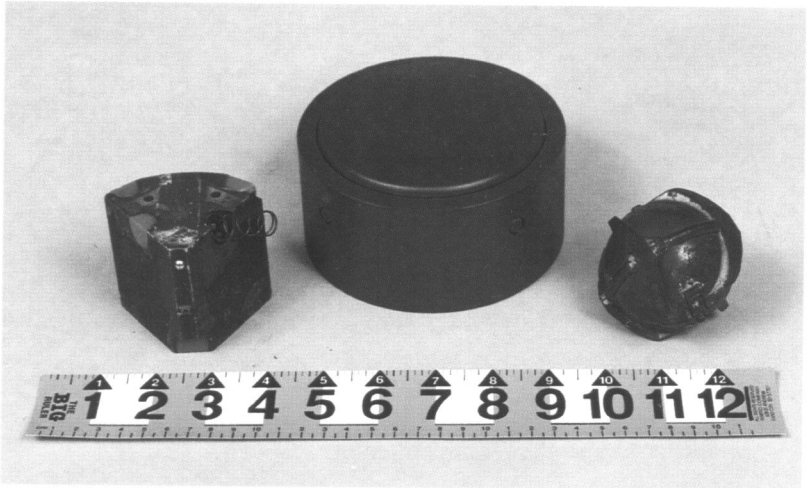

NEW: *RAAMS, 2 pounds; ADAM and BLU-54/B less than 0.5 pound.*

Figure B-10. Area-denial submunitions: ADAM (left), RAAMS (middle), and BLU-54/B (right).

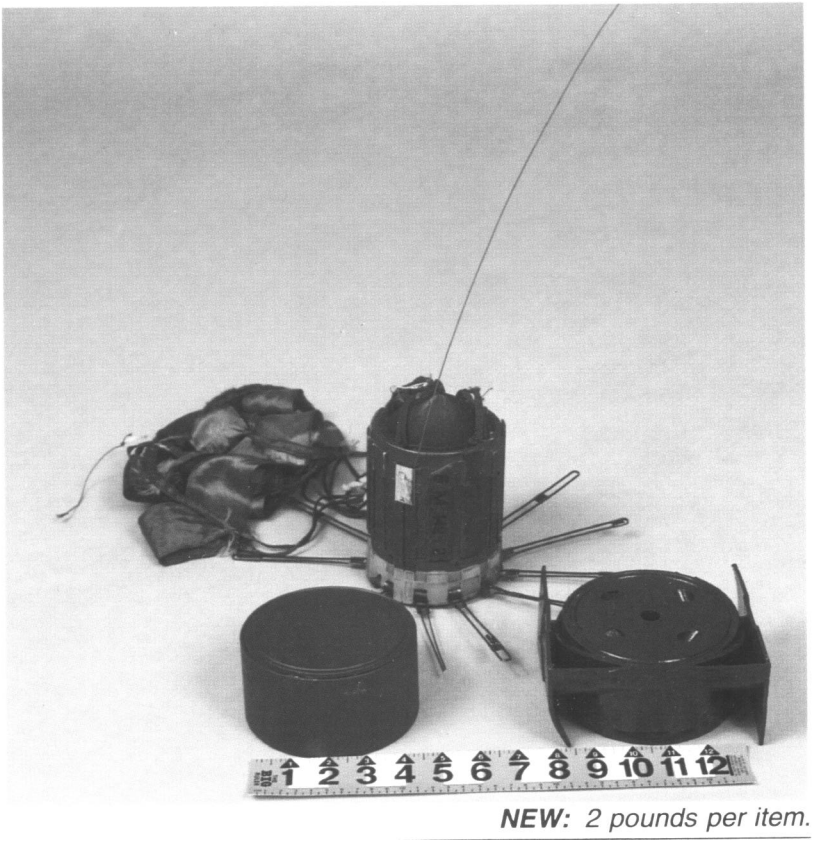

Figure B-11. Area-denial submunitions: M74 (left), BLU-91/B "Gator" (right), and AT-2 (rear).

A P P E N D I X C

PROJECTED ORDNANCE IDENTIFICATION AND NET EXPLOSIVE WEIGHTS

PROJECTILES

NEW: *Less than 8 pounds per item.*

Figure C-1. Spin-stabilized projectiles, 105-millimeter and smaller.

NEW: *Less than 20 pounds per item.*

Figure C-2. Spin-stabilized projectiles, 130-millimeter.

NEW: *Less than 15 pounds for the 105-millimeter projectile and 2 pounds for the 100-millimeter projectile.*

Figure C-3. Spin-stabilized projectiles, 105-millimeter high-explosive plastic (HEP) (rear) and 100-millimeter armor piercing (AP) (front).

Figure C-4. Spin-stabilized projectiles, 180-millimeter (left) and 155-millimeter (right).

NEW: *Less than 40 pounds.*

Figure C-5. Spin-stabilized projectile, 8-inch, HE.

NEW: *Less than 35 pounds.*

Figure C-6. Spin-stabilized projectile, 165-millimeter HEP.

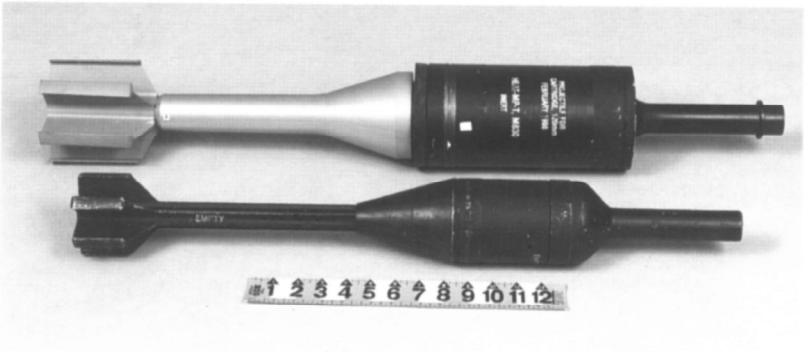

NEW: *Less than 5 pounds per item.*

Figure C-7. Fin-stabilized projectiles, 90-millimeter (front) and 120-millimeter high-explosive antitank (HEAT) (rear).

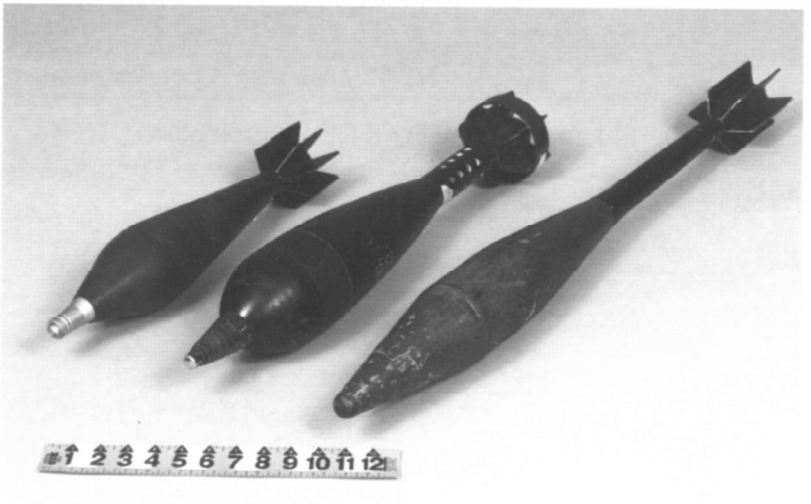

NEW: *Less than 5 pounds per item.*

Figure C-8. Fin-stabilized projectiles.

NEW: *Less than 5 pounds per item.*

Figure C-9. Folding-fin stabilized HEAT projectiles.

MORTARS

NEW: *Less than 5 pounds per item.*

Figure C-10. Fin-stabilized mortars, 60-millimeter and below

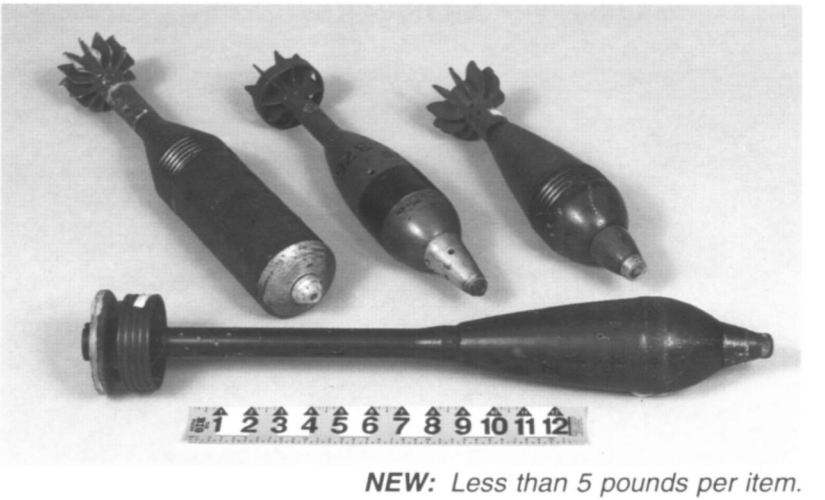

Figure C-11. Fin-stabilized mortars, 82-millimeter (rear) and 100-millimeter recoilless rifle projectile (front).

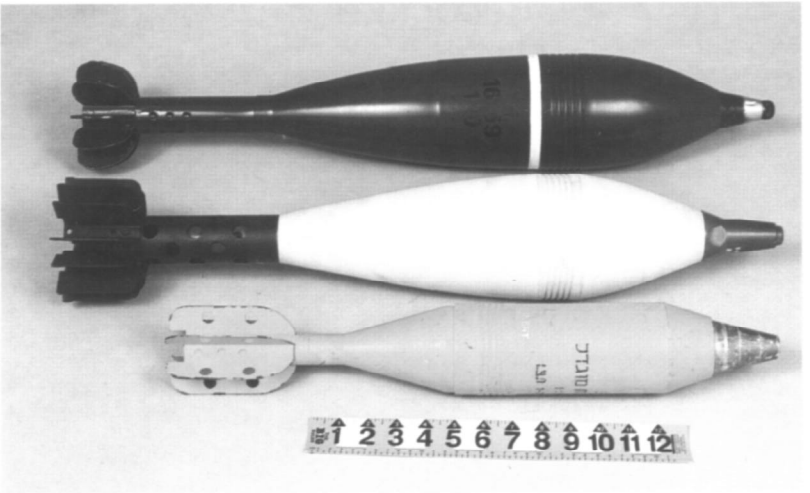

NEW: *Less than 5 pounds per item.*

Figure C-12. Fin-stabilized mortars, 81-millimeter and 120-millimeter.

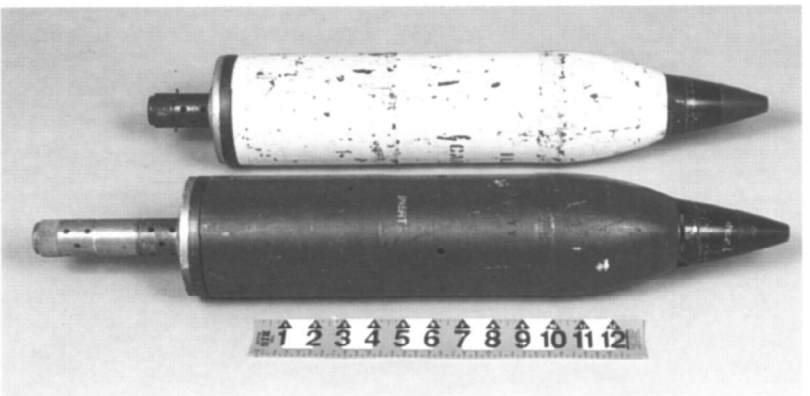

NEW: *Less than 10 pounds per item.*

Figure C-13. Spin-stabilized mortars, 4.2-HE (front) and illumination (rear).

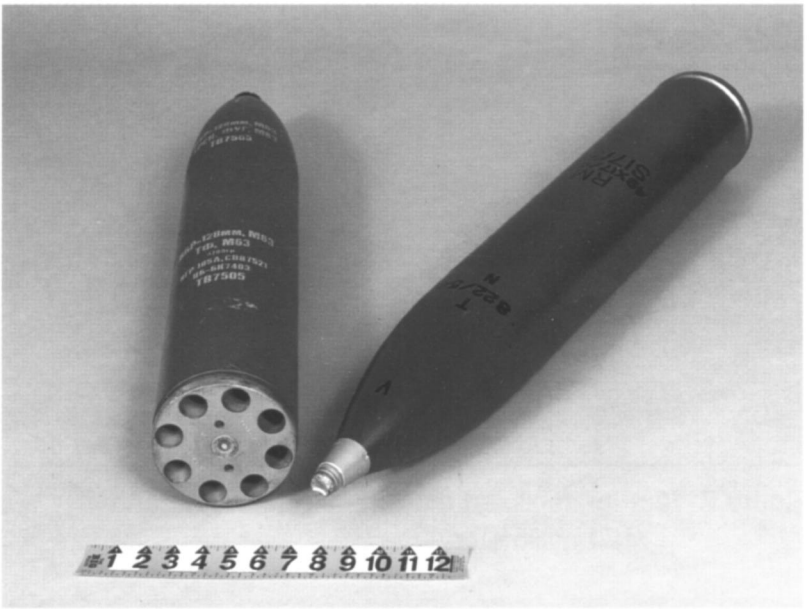

NEW: *Less than 10 pounds per item.*

Figure C-14. Spin-stabilized rockets, 128-millimeter (left) and 132-milimeter (right).

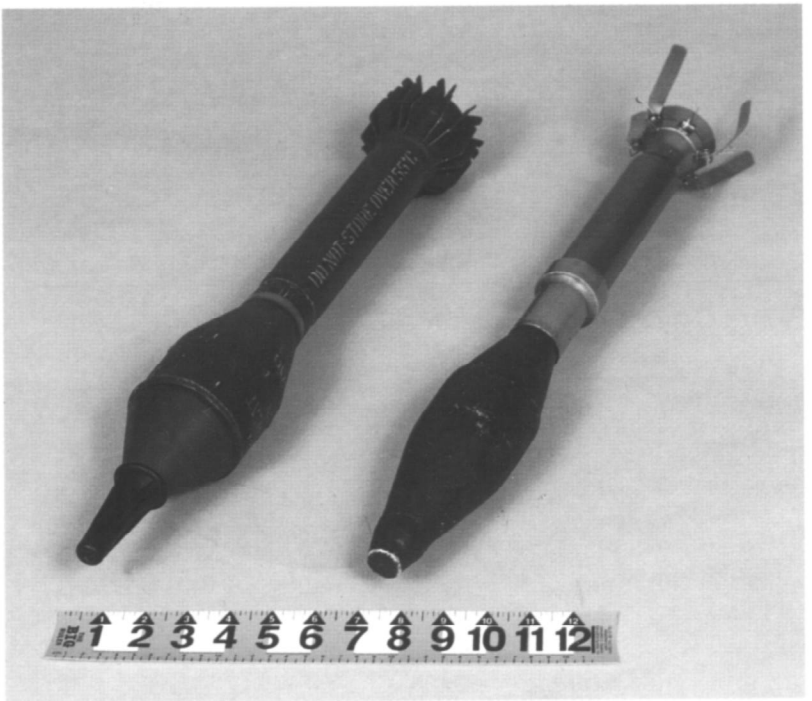

NEW: *Less than 3 pounds per item.*

Figure C-15. Fin-stabilized HEAT rockets.

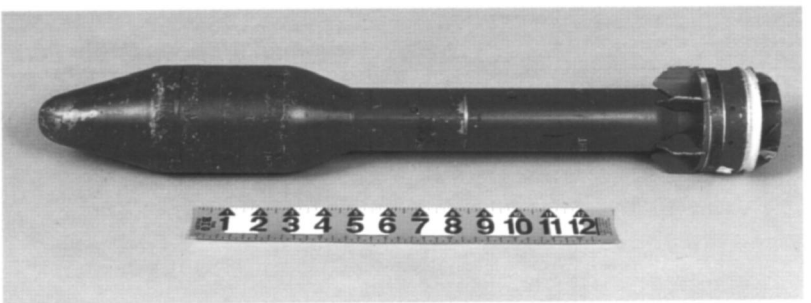

NEW: *Less than 5 pounds per item.*

Figure C-16. Fin-stabilized rocket, 3.5-inch, HEAT.

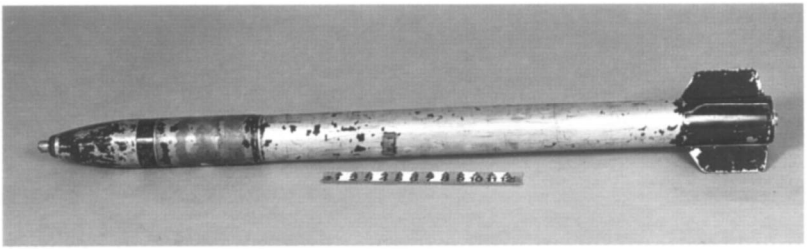

NEW: *Less than 10 pounds per item.*

Figure C-17. Fin-stabilized rocket.

NEW: *Less than 10 pounds per item.*

Figure C-18. Fin-stabilized rocket, 2.75-inch.

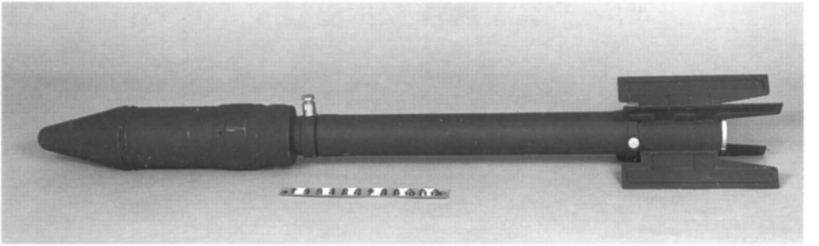

NEW: *Less than 20 pounds per item.*

Figure C-19. Fin-stabilized rocket, 132-millimeter.

NEW: *Less than 20 pounds per item.*

Figure C-20. Fin-stabilized rocket, 122-millimeter.

GUIDED MISSILES

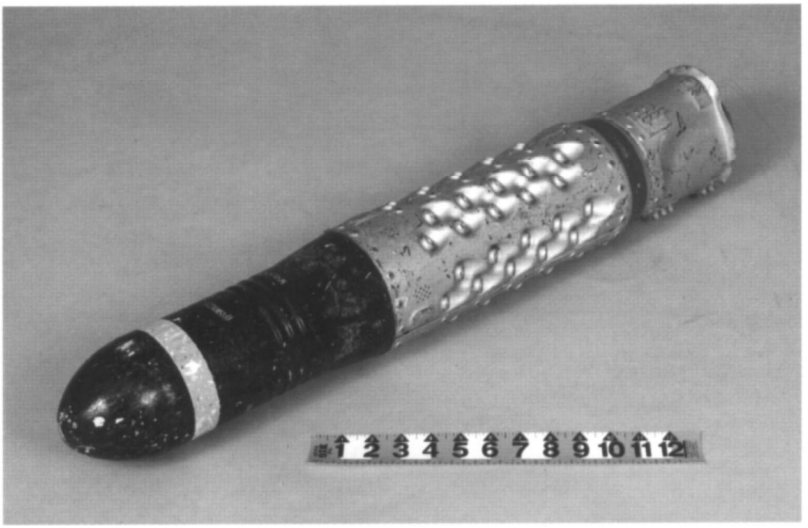

NEW: *Less than 10 pounds per item.*

Figure C-21. Dragon guided missile.

NEW: *Less than 10 pounds per item.*

Figure C-22. TOW guided missile.

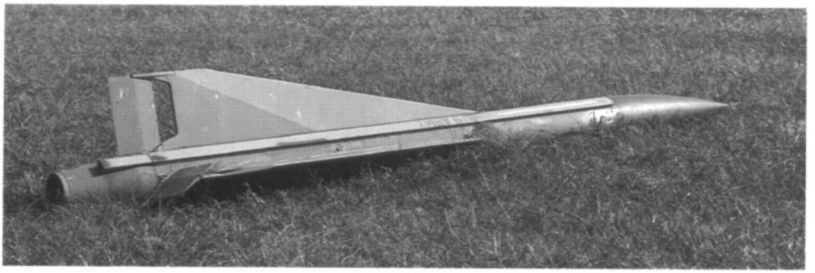

NEW: *Less than 40 pounds per item.*

Figure C-23. HAWK guided missile.

RIFLE GRENADES

NEW: *Less than 1 pound per item.*

Figure C-24. APERS rifle grenades.

NEW: *Less than 3 pounds per item.*

Figure C-25. HEAT rifle grenade.

NEW: *Less than 5 pounds per item.*

Figure C-26. Former Soviet Union rfile grenades, rocket-propelled grenade (RPG) models, HEAT.

NEW: *Less than 5 pounds per item.*

Figure C-27. Former Yugoslavia rifle grenades, HEAT (front) and HE (rear).

A P P E N D I X D

THROWN ORDNANCE IDENTIFICATION AND NET EXPLOSIVE WEIGHTS

FRAGMENTATION GRENADES

NEW: *Less than 2 pounds per item.*

Figure D-1. Fragmentation grenades.

ANTITANK GRENADES

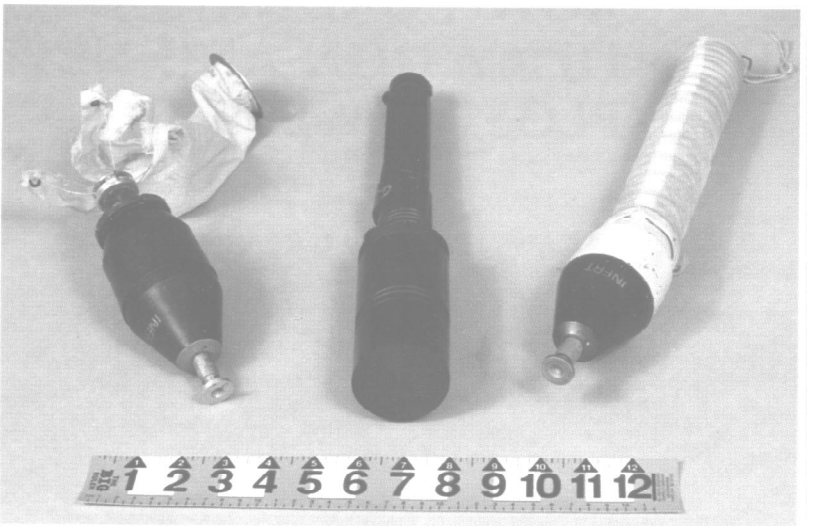

NEW: *Less than 2 pounds per item.*

Figure D-2. HEAT grenades.

SMOKE GRENADES

NEW: *Not applicable.*

NOTE: *These grenades do not have a NEW concern, although bursting WP grenades have a 15-meter bursting radius.*

Figure D-3. Smoke grenades, burning-type (left) and bursting-type (middle and right).

NEW: *Not applicable.*

Figure D-4. Riot-control (CS) grenades.

ILLUMINATION GRENADE

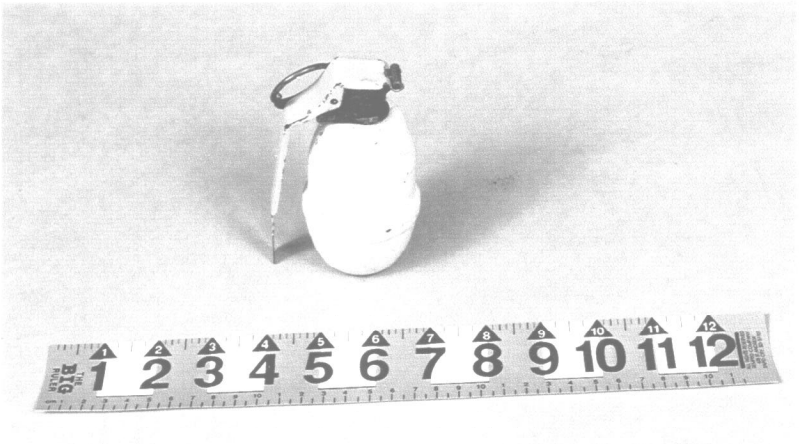

NEW: *Not applicable.*

Figure D-5. Illumination grenade.

A P P E N D I X E

PLACED ORDNANCE IDENTIFICATION AND NET EXPLOSIVE WEIGHTS

ANTIPERSONNEL MINES

NEW: *Less than 0.5 pound per item.*

Figure E-1. APERS land mines.

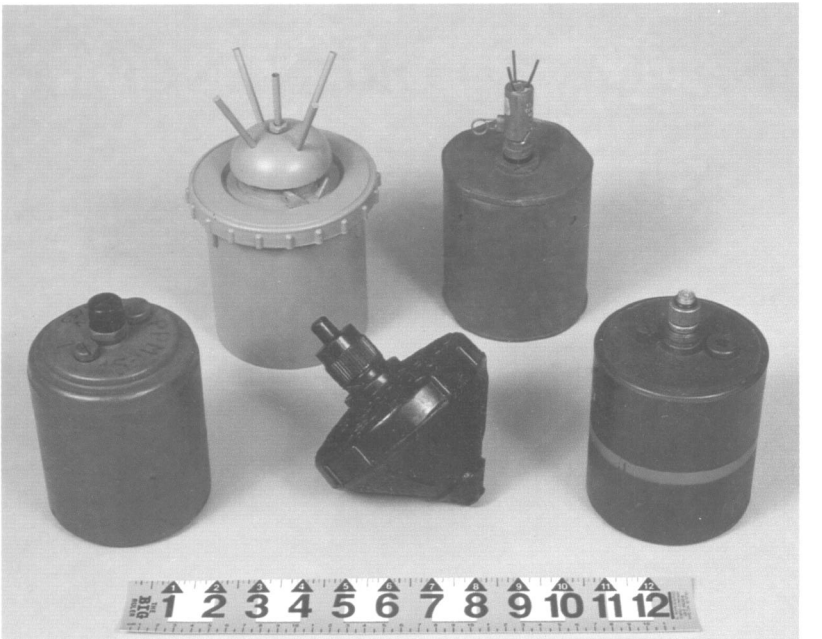

NEW: *Less than 2 pounds per item.*

Figure E-2. APERS land mines.

ANTITANK MINES

NEW: *Less than 15 pounds per item.*

Figure E-3. AT/antivehicular land mines.

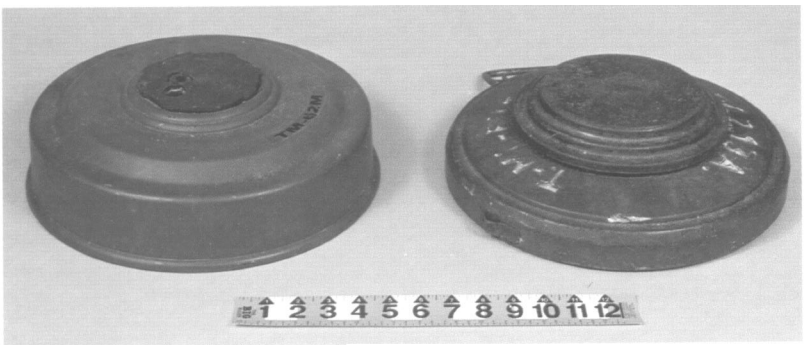

NEW: Less than 20 pounds per item.

Figure E-4. AT/antivehicular land mines.

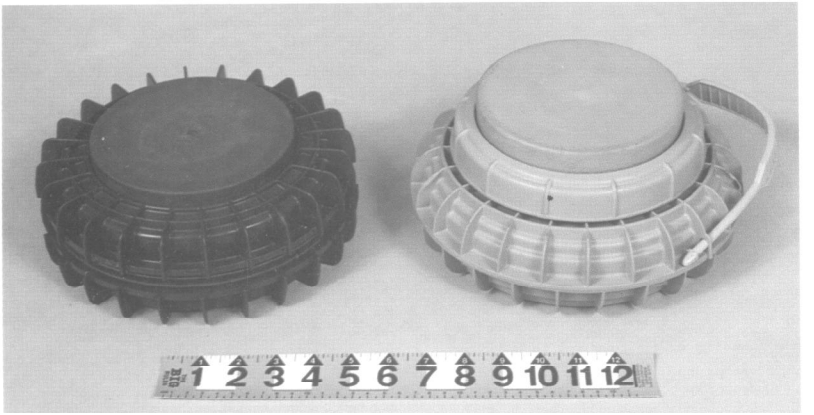

NEW: *Less than 6 pounds per item.*

Figure E-5. AT/antivehicular land mines.

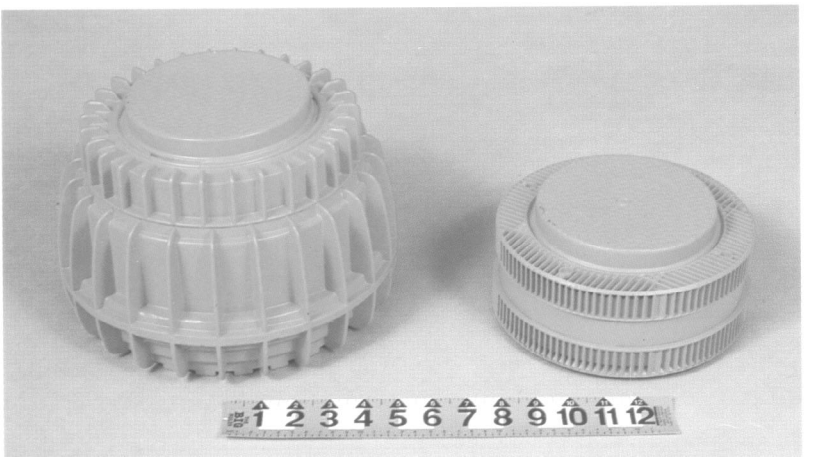

NEW: *Less than 15 pounds per item.*

Figure E-6. AT/antivehicular land mines.

NEW: *Less than 15 pounds per item.*

Figure E-7. AT/antivehicular land mines.

NEW: *Less than 22 pounds per item.*

Figure E-8. AT/antivehicular land mines.

GLOSSARY

ADAM area-denial artillery munition

AMAT antimateriel

AP armor piercing

APERS antipersonnel

AT antitank

BFA battlefield functional area

BLU bomb live unit

CB chemical biological

CBU cluster bomb unit

CS combat support; also o-chlorbenzolmalonitrile (riot-control agent)

CSS combat service support

DA Department of the Army

DOD Department of Defense

DP dual-purpose (antipersonnel/antimatetiel)

DTG date-time group

EOD explosive ordnance disposal

EOR explosive ordnance reconnaissance

FASCAM family of scatterable mines

FM field manual

FMFM Fleet Marine Force manual

GTA graphic training aid

HE high explosive

HEAT high-explosive antitank

HEP high-explosive plastic

HQ headquarters

MAGTF Marine air-ground task force

MICLIC mine-clearing line charge

MEDEVAC medical evacuation

METT-T mission, enemy, terrain, troops, and time available; Marine Corps, mission, enemy, terrain and weather, troops and support available-time available

NATO North Atlantic Treaty Organization

NBC nuclear, biological, chemical

NEW net explosive weight

OPORD operation order

POC point of contact

PATRIOT phased-array tracking radar intercept on target

RAAMS remote antiarmor mine system

RPG rocket-propelled grenade

SMCT soldier's manual of common tasks

SOI signal operating instructions

SOP standing operating procedure

STANAG standardization agreement

STP soldier training publication

TASC training aids support center

TOW tube-launched, optically tracked, wire-guided

TRADOC (United States Army) Training and Doctrine Command

UIC unit identification code

US United States (of America)

UXO unexploded ordnance

WP white phosphorus (screening smoke)

REFERENCES

DOCUMENTS NEEDED

These documents must be available to the intended users of this publication.

DVC-T 5-47. *Full-Scale UXO Training Aids.*

*FM 20-32. *Mine/Countermine Operations.* 30 September 1992.

*FM 90-13-1. *Combined Arms Breaching Techniques.* *28* February 1991.

GTA 9-12-1. *Unexploded Ordnance (UXO) Procedures.*

Safety Video No. 709919. *"Danger UXO."*

Instructional Video No. 710288. *"The UXO Hazard."*

READINGS RECOMMENDED

These readings contain relevant supplemental information.

AR 75-15. *Responsibilities and Procedures for Explosive Ordnance Disposal.* 1 November 1978.

DA Form 2028. *Recommended Changes to Publications and Blank Forms.* February 1974.

FM 3-4/FMFM 11-9. NBC *Projection. 29* May 1992.

FM 5-34/FMFRP 13-5. *Engineer Field Data.* 14 September 1987.

FM 9-15. *Explosive Ordnance Disposal Service and Unit Operations.* 20 March 1989.

---

*This source was also used to develop this publication.

FMFM 13-7. *MAGTF Breaching Operations.* To be published in FY 94.

FMFM 13-8. *MAGTF Explosive Ordnance Disposal*. 20 December 1993.

STP 21-1-SMCT. *Soldier's Manual of Common Tasks, Skill Level 1*. 1 October 1990 (new edition to be published in FY94).

STP 21-24-SMCT. *Soldier's Manual of Common Tasks, Skill Levels 2/3/4.* 1 October 1992.

STP 21-I-MQS. *Military Qualification Standards I Manual of Common Tasks (Recommissioning Requirements).* 31 May 1990.

STP 21-II-MQS. *Military Qualification Standards II Manual of Common Tasks (for Lieutenants and Captains).* 31 January 1991.

INDEX

ammunition color codes
former Soviet Union, 2-4, A-1, A-2
NATO, 2-4, A-3
US, 2-4, A-3

antipersonnel mines, 2-29, 2-30. *See also* placed ordnance *and* land mines.
detonation of, 2-29
NEWS for, E-1, E-2
photographs of, E-1, E-2
shapes and sizes of, 2-29

antitank grenades, 2-27, 2-28. *See also* hand grenades.
NEWs for, D-2
photographs of, D-2

antitank mines. *See also* placed ordnance *and* land mines.
fuzing of, 2-31, 2-32
NEWs for, E-3 through E-6
photographs of, E-3 through E-6
shapes and sizes of, 2-31

area-denial submunitions. *See* submunitions.

barricades, 3-3 through 3-8. *See also* protective measures.
circular, 3-6, 3-7
definition of, 3-3
for large UXO, 3-6
for medium UXO, 3-6
for small UXO, 3-6
guidelines for building, 3-4
placement and size of, 3-4 through 3-8
purpose of, 3-3
semicircular, 3-6 through 3-8

barricades (continued)
using sandbags to build, 3-4 through 3-8
wall, 3-6 through 3-8

bombs
chemical-agent filled, 2-1, 2-4
color codes, 2-4, A-1, A-3
components of, 2-1
fuzes for, 2-4 through 2-6.
general-purpose, 2-1 through 2-3
NEWs for, B-1 through B-3
photographs of, B-1 through B-3
stabilizing devices, 2-6 through 2-8

breaching techniques, 5-3 through 5-8
containment, 5-8. *See also* barricades.
direct-fire, 5-6 through 5-8. *See also* direct-fire weapons.
explosive-charge, 5-5, 5-6. *See also* mine-clearing line charge (MICLIC) *and* hand-placed explosive charge.
heavy-force, 5-4, 5-5. *See also* engineer equipment (heavy-force breaching).
remote movement, 5-8

direct-fire weapons
disadvantages of using, 5-7
dismounted procedure for using, 5-7
mounted procedure for using, 5-7, 5-8
protection required when using, 5-7
used to clear submunitions and scatterable mines, 5-6

dispensers, 2-8 through 2-11
attached, 2-9, 2-11
dropped, 2-9, 2-10
payload of, 2-8
photograph of, B-3

dropped ordnance, 2-1 through 2-16
bombs, 2-1 through 2-7, B-1 through B-3. *See also* bombs.
dispensers, 2-1, 2-8 through 2-11, B-3. *See also* dispensers.
submunitions, 2-1, 2-12 through 2-16, B-4 through B-9. *See also* submunitions.

engineer equipment (heavy-force breaching)
advantages of using, 5-4, 5-5
disadvantages of using, 5-5

evacuation distances, 3-2, 3-3

evacuation plan, 5-2

family of scatterable mines (FASCAM), v, 2-12 through 2-16. *See also* submunitions.

FASCAM. *See* family of scatterable mines (FASCAM).

fragmentation grenades, 2-25, 2-26. *See also* hand grenades.
NEW for, D-1
photographs of, D-1

guided missiles. *See also* projected ordnance.
Dragon, 2-22, 2-23
fuzing for, 2-23
guidance systems for, 2-22, 2-23
NEWs for, C-16 through C-18
PATRIOT, 2-22 through 2-24
photographs of, C-16 through C-18
Sparrow, 2-22 through 2-24
stabilization of, 2-23
TOW, 2-22, 2-23

hand grenades, 2-25 through 2-29.
antitank, 2-27, 2-28, D-2. *See also* antitank grenades.
fragmentation, 2-25, 2-26, D-1. *See also* fragmentation grenades.
illumination, 2-28, 2-29, D-5. *See also* illumination grenades.
offensive, 2-27

hand grenades (continued)
parts of, 2-25
smoke, 2-27, 2-28, D-3, D-4. *See also* smoke grenades.

hand-placed explosive charge
disadvantages of using, *5-6*
used to clear evacuation route, 5-6

hazards. *See* UXO hazards.

illumination grenades, 2-28, 2-29, D-5. *See also* hand grenades.
fuzing for, 2-29
NEW for, D-5
photograph of, D-5
purpose of, 2-28

impact submunitions. *See* submunitions.

land mines, 2-29 through 2-32, E-1 through E-6
antipersonnel, 2-29, 2-30, E-1, E-2. *See also* antipersonnel mines.
antitank, 2-31, E-3 through E-6. *See also* antitank mines.

markers. *See* UXO markers.

MICLIC. *See* mine-clearing line charge (MICLIC).

mine-clearing line charge (MICLIC)
disadvantages of using, 5-5, 5-6
used to clear minefield, 5-5

mines
placed, 2-12. *See also* land mines.
scatterable, 2-12. *See also* submunitions

mission
engineer, 1-1
EOD, 1-1

mortars. *See also* projected ordnance.
fin-stabilized. 2-20

NEWs for, C-9 through C-11
photographs of, C-9 through C-11
size of, 2-20
spin-stabilized, 2-20
types of fillers used in, 2-20

net explosive weight (NEW), 3-2, 3-4

NEW. *See* net explosive weight (NEW).

operation order (OPORD), 5-2, 5-3

OPORD. *See* operation order (OPORD).

placed ordnance, 2-1, 2-29 through 2-32, E-1 through E-6. *See also* land mines.

projected ordnance, 2-1, 2-17 through 2-24
guided missiles, 2-22 through 2-23, C-16 through C-1 8. *See also* guided missiles.
mortars, 2-20, C-9 through C-11. *See also* mortars.
projectiles, 2-17 through 2-19, C-1 through C-8. *See also* projectiles.
rifle grenades, 2-24, C-18 through C-20. *See also* rifle grenades.
rockets, 2-20 through 2-22, C-12 through C-15. *See also* rockets,

projectiles. *See also* projected ordnance.
fin-stabilized, 2-17 through 2-19
former Soviet Union color codes for, A-2
fuzing for, 2-17, 2-18
NEWS for, C-1 through C-8
photographs of, C-1 through C-8
size of, 2-17
spin-stabilized, 2-17, 2-19
types of fillers used in, 2-17

protective measures, 3-2 through 3-8
barricade, 3-3 through 3-8. *See also* barricades.

evacuate, 3-2. *See also* evacuation distances.
isolate, 3-3

rifle grenades. *See also* projected ordnance.
delivery systems for, 2-24
fuzing for, 2-24
NEWs for, C-18 through C-20
photographs of, C-18 through C-20
sizes of, 2-24
types of fillers used in, 2-24

rockets. *See also* projected ordnance.
components of, 2-21, 2-22
control of, 2-20
delivery systems for, 2-22
NEWs for, C-12 through C-15
photographs of, C-12 through C-15
size of, 2-20, 2-21
stabilization of, 2-21, 2-22

safety guidelines, 1-2 through 1-5

self-extraction
situational assessment for, 5-3
techniques, 5-4 through 5-8. *See also* breaching techniques.

smoke grenades. *See also* hand grenades.
burning-type, 2-27, 2-28
bursting-type, 2-27, 2-28
fuzing for, 2-27, 2-28
NEWs for, D-3, D-4
photographs of, D-3, D-4
types of fillers used in, 2-27

spot report. *See* UXO spot report.

submunitions, 2-12 through 2-16, B-4 through B-9
AMAT/AT fin-stabilized, 2-15

AMAT/AT parachute-stabilized, 2-15
APERS area-denial, 2-13, 2-14
APERS ball-type, 2-12
APERS bounding-fragmentation, 2-13
APERS pressure-activated, 2-13
AT area-denial, 2-15, 2-16
bomblets as, 2-12
delivery systems for, 2-12
dual-purpose, 2-14
fuzing for area-denial, 2-12 through 2-16
grenades as, 2-12
impact, 2-12.
mines as, 2-12. *See also* mines.
NEWs for, B-4 through B-9
photographs of, B-4 through B-9

threats. *See* UXO threats.

thrown ordnance, 2-1, 2-25 through 2-29. *See also* hand grenades.

training items, viii

types of ordnance
dropped, 2-1 through 2-16. *See also* dropped ordnance.
placed, 2-1, 2-29 through 2-32. *See also* placed ordnance.
projected, 2-17 through 2-24. *See also* projected ordnance.
thrown, 2-25 through 2-29. *See also* thrown ordnance.

UXO hazards
alert personnel to, 5-2
detection of, 1-2, 5-1

UXO markers
placement of, 3-9, 3-10
standard, 3-9
using makeshift, 3-10

UXO **spot report**
changing the priority of, 4-3
definition of, 4-1
information required for, 4-1, 4-2
priorities defined for, 4-2
transmitting the, 4-1

UXO threats
active, v, l-l
passive. v, 1-1

FM 21-16
FMFM 13-8-1
30 AUGUST 1994

By Order of the Secretary of the Army:

GORDON R. SULLIVAN
General, United States Army
Chief of Staff

Official:

MILTON H. HAMILTON
Administrative Assistant to the
Secretary of the Army
07074

By Direction of the Commandant of the Marine Corps:

C. C. Krulak
Lieutenant General, United States Marine Corps
Commanding General
Marine Corps
Combat Development Command

DISTRIBUTION: Active Army, USAR, and ARNG: To be distributed in accordance with DA Form 12-11-E, requirements for FM 21-16, *Unexploded Ordnance (UXO) Procedures* (Qtr rqr block no. 0090).

FM 21-16
FMFM 13-8-1

Marine Corps PCN: 139 714000 00 PIN: 072861-000