DOD 4500.9-R

DEFENSE TRANSPORTATION REGULATION

PART IV

PERSONAL PROPERTY

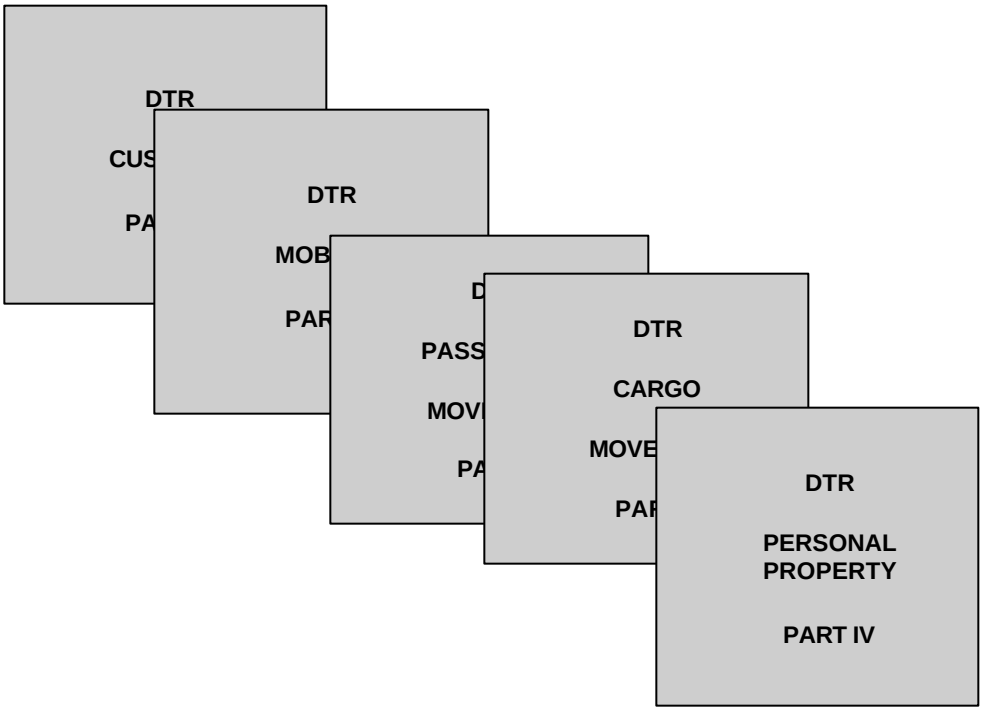

February 2002

FOREWORD

This document is the revised Department of Defense (DOD) Regulation 4500.9-R, Defense Transportation Regulation Part IV, Personal Property. It is issued under the authority of Deputy Under Secretary of Defense (Logistics) Memorandum, Defense Transportation Regulation (DTR), 4 August 1995 and the Under Secretary of Defense (Acquisition and Technology) Memorandum, Assignment of Defense Transportation Operational Regulations and Procedures Authority to Commander in Chief, U.S. Transportation Command (CINCTRANS), 18 November 1998. It implements DOD policies governing the use of DOD-owned and -controlled aircraft and sealift/airlift and establishes criteria for personal property movement. In accordance with DOD Directive 5158.4, United States Transportation Command, January 1993, the Commander-in-Chief United States Transportation Command is the DOD single manager for transportation (for other than Service unique or theater-assigned transportation assets). Strict adherence to the provisions of this Regulation is essential to maintain the integrity of the DOD transportation system. This change updates provisions for the movement of personal property from, and within Continental United States and Outside the Continental United States.

This revised DOD Regulation 4500.9-R, Part IV, replaces the DOD Regulation 4500.34R. Personal Property Traffic Management Regulation (PPTMR) and applies to the Office of the Secretary of Defense, Military Departments, Chairman and Joint Chiefs of Staff, Unified Commands, and the Defense Agencies (hereafter referred to collectively as the "DOD Components"). It also applies to travel and transportation for Uniformed Service members of the United States (US) Coast Guard, US Public Health Service, and US Coast and Geodetic Survey when cross-servicing agreements are in effect. The Military Traffic Management Command Total Quality Assurance Program Manual is replaced by Appendix O of this revised Regulation.

This change is effective immediately. To ensure uniformity, there is no provision for supplemental or unilateral modifications to this Regulation and all DOD Components will distribute it for use at the operating level. The DOD Components may publish more detailed guidance if needed and will provide a copy to the US Transportation Command (USTRANSCOM)/TCJ4-LTP. Proposed changes to this Regulation may be sent to USTRANSCOM/TCJ4-LTP after staffing through DOD component traffic management channels. No changes to the DTR may be made without prior coordination with the Military Services and Defense Logistics Agency.

The DOD Components may obtain copies of this Regulation through their own publication channels and it is approved for public release; distribution unlimited. It is also available on the USTRANSCOM Web at http://public.transcom.mil/j4/j4lt/dtr.html. Authorized registered users may obtain copies of this Regulation from the Defense Technical Information Center, 8725 John J. Kingman Road, Fort Belvoir, VA 22060. Other Federal Agencies and the public may obtain copies for a fee from the US Department of Commerce, National Technical Information Services, 5285 Port Royal, Springfield, VA 22161.

This DTR Part IV has been reviewed by the Per Diem, Travel and Transportation Allowance Committee in accordance with DODD 5154.29, dated 9 March 1993, as PDTATAC Case RR010830.

TABLE OF CONTENTS

FOREWORD ii
TABLE OF CONTENTS iii
APPENDICES vii
FIGURES viii
REFERENCES x
ABBREVIATIONS AND DEFINITIONS xv
WEB SITES xlii

CHAPTER 401 GENERAL PROVISIONS 401-1

A. PURPOSE 401-1
B. POLICY 401-1
C. INDIVIDUAL MISSIONS, ROLES, AND RESPONSIBILITIES 401-2
D. ADDITIONAL RESPONSIBILITIES 401-17
E. ASSIGNMENT OF GEOGRAPHICAL AOR 401-24
F. INSTALLATION TRANSFER, ACTIVATION, AND DEACTIVATION PROCEDURES 401-25
G. PERSONAL PROPERTY COUNSELING 401-26
H. APPLICATION FOR SHIPMENT AND/OR STORAGE OF PERSONAL PROPERTY, DD FORM 1299 401-28
I. REQUIRED SUPPORTING DOCUMENTATION 401-29
J. DISTRIBUTION OF THE DD FORM 1299 AND SUPPORTING DOCUMENTS 401-30
K. RECOMMENDATIONS FOR IMPROVEMENT 401-31
L. PPSO REQUIRED REGULATIONS 401-31
M. FORMS SUPPLY 401-31
N. TRANSPORTATION MANAGEMENT ADVISORY (TMA) 401-32

CHAPTER 402 HOUSEHOLD GOODS AND UNACCOMPANIED BAGGAGE 402-1

A. PURPOSE 402-1
B. CARRIER PARTICIPATION IN DOD TGBL TRAFFIC 402-1
C. EQUAL OPPORTUNITY TO COMPETE 402-1
D. TO ACTIONS 402-1
E. SELECTION OF METHOD AND MODE OF SHIPMENT 402-2
F. SHIPMENT OF UB BY MAIL OR SMALL PACKAGE SERVICE 402-3
G. RECEIPT FOR UB 402-4
H. RETROGRADE PERSONAL PROPERTY WITHOUT FINAL CONUS DESTINATION 402-4
I. PORT SELECTION FOR CODE 5 SHIPMENTS 402-4
J. ITGBL SHIPMENTS ENTERING THE DTS 402-4
K. CARRIER RESPONSIBILITIES AFTER APPROVAL BY HQ MTMC 402-5
L. TO ACTIONS UPON RECEIPT OF THE LOI 402-8
M. CARRIER'S APPEAL UPON REJECTION OF THE LOI 402-9
N. INSPECTION OF A CARRIER'S FACILITIES AND EQUIPMENT 402-9

O. ACTIONS TO BE TAKEN WHEN DEFICIENCIES ARE DISCOVERED IN A FACILITY 402-10
P. AGENCY INELIGIBILITY APPEALS 402-11
Q. CARRIER REPRESENTATION BY AGENTS 402-11
R. LOSS OF AGENT 402-12
S. TRAFFIC DISTRIBUTION 402-13
T. DOMESTIC TDR 402-15
U. INTERNATIONAL TDR 402-17
V. CONTROLLING GOVERNMENT-OWNED HHGS CONTAINERS 402-19

CHAPTER 403 SHIPMENT WEIGHING AND MARKING PROCEDURES 403-1

A. PURPOSE 403-1
B. WEIGHT DETERMINATION AND REWEIGH 403-1
C. SHIPMENT MARKING 403-1

CHAPTER 404 DIRECT PROCUREMENT METHOD 404-1

A. PURPOSE AND SCOPE 404-1
B. DPM SERVICES 404-1
C. ROUTING BY THE PPSO 404-1
D. USE OF DPM AIR MODE FOR INTERNATIONAL HHGS 404-1
E. VALUATION OF SHIPMENTS 404-1
F. CONTAINERS 404-1
G. PROCEDURES 404-1

CHAPTER 405 RATES, CHARGES, AND BILLINGS 405-1

A. PURPOSE 405-1
B. PROCEDURES 405-1
C. COST COMPARISONS 405-2
D. OTO RATES 405-2
E. VOLUME MOVES 405-2
F. TRANSPORTATION AND ACCESSORIAL CHARGES 405-4
G. SHIPMENT DESTINATION CHANGES AFTER PICKUP 405-5

CHAPTER 406 STORAGE 406-1

A. SIT 406-1
B. RESPONSIBILITIES FOR NTS 406-3
C. NTS PROCEDURES - ORDERING OFFICERS 406-5
D. LOSS AND DAMAGE IN NTS 406-9

CHAPTER 407 MOBILE HOMES 407-1

A. GENERAL 407-1
B. COUNSELING 407-1
C. RATES 407-1
D. CARRIER OR AGENT FACILITIES 407-2
E. AUTHORIZATION OF ACCESSORIAL SERVICES 407-2
F. SHIPMENT PROCEDURES 407-2
G. SIT 407-5

H. SHIPMENT TO AND WITHIN ALASKA 407-6
I. QUALITY CONTROL 407-6
J. CARRIER PERFORMANCE 407-6

CHAPTER 408 TRANSPORTATION OF POVs 408-1

A. GENERAL 408-1
B. RESPONSIBILITIES 408-1
C. DOD EXPORT/IMPORT CONTROL PROGRAM 408-2
D. TURN-IN OF POVS 408-3
E. MEMBER'S/EMPLOYEE'S RESPONSIBILITY 408-4
F. CHANGE OF HOME PORT/VPC 408-6

CHAPTER 409 SHIPMENT PROCEDURES FOR PRIVATELY OWNED FIREARMS (POFs) AND AMMUNITION 409-1

A. GENERAL 409-1
B. LIMITATIONS AND PROHIBITIONS 409-1
C. AUTHORIZATION 409-2
D. DOD CIVILIAN PERSONNEL 409-6
E. OTHER IMPORTS 409-8
F. RESPONSIBILITIES OF MEMBERS/EMPLOYEES 409-8
G. APPLICATIONS FOR SHIPMENT OF FIREARMS 409-9
H. SHIPMENT BY THROUGH GOVERNMENT BILL OF LADING (TGBL) DIRECT PROCUREMENT METHOD (DPM) 409-9
I. SHIPMENT THROUGH THE US POSTAL SERVICE 409-9
J. REPORTING DISCREPANCIES 409-10

CHAPTER 410 SPECIALIZED PROCEDURES 410-1

A. SHIPMENT ITV AND TRACING POLICY 410-1
B. LOSS AND DAMAGE 410-2
C. INCONVENIENCE CLAIMS 410-3
D. UNUSUAL OCCURRENCE 410-3
E. PERSONAL PROPERTY SHIPMENTS OF DECEASED MEMBERS/EMPLOYEES 410-9
F. CARRIER FAILURE/BANKRUPTCY PROCEDURES 410-10
G. EMERGENCIES INVOLVING SHIPMENTS IN NTS (CONUS) 410-16

CHAPTER 411 PERSONALLY PROCURED TRANSPORTATION 411-1

CHAPTER 412 BOATS 412-1

A. GENERAL 412-1
B. COUNSELING 412-2
C. RATES 412-3
D. CARRIER OR AGENT FACILITIES 412-3
E. SHIPMENT PROCEDURES 412-3
F. SIT 412-4
G. NTS 412-5
H. SHIPMENT OF BOATS TO ALASKA 412-5

I. QUALITY CONTROL INSPECTIONS 412-5
J. CARRIER PERFORMANCE 412-5

CHAPTER 413 US GOVERNMENT BILL OF LADING--PRIVATELY-OWNED PERSONAL PROPERTY (PPGBL) (SF 1203) AND US GOVERNMENT BILL OF LADING CORRECTION NOTICE (SF 1200) 413-1

A. GENERAL 413-1
B. RESPONSIBILITIES 413-1
C. PROCEDURES 413-1
D. PREPARATION OF THE PPGBL 413-3
E. DISTRIBUTION AND SUBSTITUTE DOCUMENTS 413-13
F. PREPARATION OF THE US GOVERNMENT BILL OF LADING CORRECTION NOTICE (SF 1200) 413-15
G. DISTRIBUTION OF SF 1200 413-17
H. WHO MAY ISSUE SF 1200 413-17

APPENDICES

A LETTER OF INTENT (LOI) HOUSEHOLD GOODS OR UNACCOMPANIED BAGGAGE A-1
B TENDER OF SERVICE PERSONAL PROPERTY HOUSEHOLD GOODS (HHG) AND UNACCOMPANIED BAGGAGE (UB) B-1
C LIST OF STATE, COMMONWEALTH, AND DISTRICT WEIGHTS AND MEASURES OFFICES OF THE UNITED STATES C-1
D PRE-AWARD SURVEY GUIDELINES D-1
E WAREHOUSE INSPECTION GUIDE AND INSTRUCTIONS FOR PREPARATION OF THE WAREHOUSE INSPECTION REPORT (DD FORM 1812) E-1
F VEHICLE PROCESSING CENTERS (VPCs) FOR SHIPPING – RECEIVING PRIVATELY-OWNED VEHICLES (POVs) F-1
G PERFORMANCE WORK STATEMENT FOR PACKING, CONTAINERIZATION AND LOCAL DRAYAGE OF DIRECT PROCUREMENT METHOD (DPM) PERSONAL PROPERTY SHIPMENTS G-1
H ALPHA CODES FOR DIRECT PROCUREMENT METHOD (DPM) SHIPMENTS H-1
I EXAMPLES OF HAZARDOUS MATERIALS I-1
J BASIC ORDERING AGREEMENT FOR STORAGE OF PERSONAL PROPERTY AND RELATED SERVICES J-1
K MULTI-SERVICE PUBLICATIONS FOR DEPARTMENT OF DEFENSE PERSONAL PROPERTY SHIPMENT AND STORAGE PROGRAM K-1
L TRANSIT TIMES FOR DOMESTIC THROUGH GOVERNMENT BILL OF LADING HOUSEHOLD GOODS SHIPMENTS INCLUDING ALASKA CODE 1 (MOTOR VAN) CODE 2 (CONTAINER) L-1
M TRANSIT TIMES FOR INTERNATIONAL THROUGH GOVERNMENT BILL OF LADING AND DIRECT PROCUREMENT METHOD HOUSEHOLD GOODS SHIPMENTS BETWEEN THE CONTINENTAL UNITED STATES AND OVERSEAS M-1
N TRANSIT TIMES FOR INTERNATIONAL THROUGH GOVERNMENT BILL OF LADING AND DIRECT PROCUREMENT METHOD (DPM) UNACCOMPANIED BAGGAGE SHIPMENTS BETWEEN THE CONTINENTAL UNITED STATES AND OVERSEAS N-1
O TOTAL QUALITY ASSURANCE PROGRAM (TQAP) O-1
P GUIDELINES FOR THE QUALITY CONTROL INSPECTOR P-1
Q TRANSPORTATION MANAGEMENT ADVISORY MESSAGES (TMAs) Q-1
R DEPARTMENT OF DEFENSE STANDARD TRANSIT TIMES GUIDE – LESS TRUCKLOAD R-1
S BACKGROUND AND TECHNICAL DETAILS FOR 2-DIMENSIONAL (2D) SYMBOLOGY ON THE PERSONAL PROPERTY MILITARY SHIPPING LABEL (MSL) S-1

FIGURES

Figure	Title	Page
401-1	DD Form 1299, Application for Shipment and/or Storage of Personal| Property	401-33
401-2	DD Form 619, Statement of Accessorial Services Performed	401-35
401-3	DD Form 619-1, Statement of Accessorial Services Performed (Storage-In-Transit Delivery and Reweigh)	401-36
401-4	DD Form 1840, Joint Statement of Loss or Damage at Delivery	401-37
401-5	DD Form 1840R, Notice of Loss or Damage	401-38
401-6	DD Form 1797, Personal Property Counseling Checklist	401-39
401-7	DD Form 1614, Request/Authorization for DOD Civilian Permanent Duty or Temporary Change of Station (TCS) Travel	401-41
401-8	DD Form 1300, Report of Casualty	401-43
401-9	DD Form 1434, United Kingdom (UK) Customs Declaration for the Importation of Personal Effects of US Forces/Civilian Personnel on Duty in the UK	401-44
401-10	DD Form 1252, US Customs Declaration for Personal Property Shipments	401-46
401-11	DD Form 1252-1, US Customs Declaration for Personal Property Shipments	401-47
401-12	USEUCOM Form 30-3R, Agriculture Inspection Certificate	401-48
402-1	DD Form 1796, Receipt for Unaccompanied Baggage	402-22
402-2	DD Form 1812, Warehouse Inspection Report	402-23
403-1	DD Form 1671, Reweigh of Personal Property	403-3
403-2	Military Shipping Label, Personal Property	403-4
404-1	DD Form 2773, Report of Contractor Services	404-5
404-2	DD Form 2772, Contract Discrepancy Report	404-6
405-1	OTO Message Format	405-7
405-2	Volume Move Request Format	405-8
405-3	Sample Message, Certificate for Delivery from Storage In-Transit (SIT)	405-9
405-4	Sample Message, Certificate for Diversion	405-10
406-1	DD Form 1857, Temporary Commercial Storage at Government Expense	406-12
406-2	Inbound Arrival/Expiration Notice	406-13
406-3	Request for Extension of Storage in Transit (SIT)	406-14
406-4	DD Form 1162-1, Schedule of Services and Rates for Household Goods	406-15
406-5	DD Form 1164, Service Order for Personal Property	406-16
406-6	DD Form 1811, Pre-Award Survey of Contractor's/Carrier's Facilities and Equipment	406-17
406-7	Storage Facility Rates	406-18
407-1	MOTO Message Request Format	407-7
407-2	DD Form 1863, Accessorial Services – Mobile Homes	407-8
407-3	Mobile Home Volume Move Message Request Format	407-10
407-4	Mobile Home Counseling Checklist	407-11
407-5	DD Form 1412, Inventory of Articles Shipped in House Trailer	407-12
407-6	DD Form 1800, Mobile Home Inspection Record	407-13
407-7	DD Form 1799, Member's Report on Carrier Performance – Mobile Home	407-15

408-1 DD Form 788, Private Vehicle Shipping Document for Automobile 408-7
408-2 DD Form 788-1, Private Vehicle Shipping Document for Van..... 408-9
408-3 DD Form 788-2, Private Vehicle Shipping Document for Motorcycle 408-11
408-4 Bond to Ensure Conformance with Motor Vehicle Safety and Bumper Standards 408-13
408-5 Request for Shipment of POV Through CONUS/OCONUS Alternate Port/VPC Format..... 408-15
408-6 DD Form 139, Pay Adjustment Authorization..... 408-16
408-7 DD Form 1131, Cash Collection Voucher..... 408-17
408-8 Request for POV Shipment -- Change in Home Port/VPC Format..... 408-18
409-1 DD Form 603, Registration of War Trophy Firearm..... 409-1
409-2 Customs Form 4455, Certificate of Registration..... 409-3
409-3 ATF Form 6 Part II (5330.3B), Application and Permit for Importation of Firearms, Ammunition and Implements of War..... 409-5
409-4 ATF Form 6 Part I (5330.3A), Application and Permit for Importation of Firearms, Ammunition and Implements of War..... 409-7
409-5 PS Form 2976-A, Customs Declaration and Dispatch Note..... 409-10
410-1 DD Form 1841, Government Inspection Report..... 410-17
410-2 SF Form 1200, Government Bill of Lading Correction Notice 410-19
412-1 BOTO Message Request Format 412-6
412-2 International BOTO Rate Request Format 412-7
413-1 SF 1203, US Government Bill of Lading-Privately Owned Personal Property.. 413-19
413-2 SF 1200, Government Bill of Lading Correction Notice..... 413-21
A-1 Letter of Intent (LOI) A-3
B-1 Certificate of Cargo Liability Insurance B-24
B-2 Household Goods Descriptive Inventory.....B-25
G-1 Household Goods Descriptive Inventory.....G-23
G-2 Packing List of Household Goods G-24
G-3 Location of Permanent Markings on ASTM-D4169-01 Wood HHG Box.....G-25
G-4 Location of Permanent Markings on MIL-STD 1489 HHG Box.....G-26
G-5 Container Marking for Household Goods.....G-27
G-6 Military Shipping Label for Personal Property.....G-28
G-7 Markings of Unaccompanied Baggage G-29
G-8 Joint Statement of Loss and Damage at Delivery (DD Form 1840).....G-30
G-9 Notice of Loss or Damage (DD Form 1840R).....G-31
G-10 Transportation Control and Movement Document (DD Form 1384).....G-32
O-1 DD Form 1780, Shipment Evaluation and Inspection..... O-30
O-2 Carrier Evaluation Worksheet/Report..... O-34
O-3 DD Form 1814, Carrier Notice of Warning/Suspension..... O-37
P-1 Form 1164, Claim for Reimbursement for Expenditures on Official Business..... P-6
R-1 DOD Standard Transit Time Guide – Less Truckload R-2

REFERENCES

(Each applies to the current edition unless otherwise specified. Due to numerous reorganization efforts, the guidance in some of the references may have been, or will be reissued in other publications. It may be necessary to consult a functional area expert to determine the most recent guidance.)

1. Air Force Joint Instruction 24-232, Quality Control of Personal Property.

2. Air Force Policy Directive 24-5, Transporting and Storing Personal Property.

3. American National Standard for Material Handling MH10.8.1-2000, Linear Bar Code and Two-Dimensional Symbols Used in Shipping, Receiving, and Transport Applications.

4. American Society for Testing and Materials, D3953-97, Standard Specification for Strapping, Flat Steel and Seals.

5. American Society for Testing and Materials, D4169-01, Standard Practice for Performance Testing of Shipping Containers and Systems.

6. American Society for Testing and Materials, D5118/D5118M-95, Standard Practice for Fabrication of Fiberboard Shipping Boxes.

7. American Society for Testing and Materials, D5168-98, Standard Practice for Fabrication and Closure of Triple-Wall Corrugated Fiberboard Containers.

8. American Society for Testing and Materials, D6039/D6039M-96, Standard Specification for Crates, Wood, Open and Covered.

9. Army Regulation 55-71, Transportation of Personal Property and Related Services.

10. Bureau of Alcohol, Tobacco and Firearms Publication 5300.5, State Laws and Published Ordinances-Firearms.

11. Code of Federal Regulations, Title 27 Paragraph 178.114, Importation by Members of the US Armed Forces.

12. Code of Federal Regulations, Title 41 Part 101-41, Transportation Documentation and Audit.

13. Code of Federal Regulations, Title 41 Part 101-41.3, Freight Transportation Services Furnished for the Account of the United States.

14. Code of Federal Regulations, Title 41 Part 102-118, Transportation Payment and Audit.

15. Code of Federal Regulations, Title 49, Part 375.7, Determination of Weights.

16. Code of Federal Regulations, Title 49, Part 376, Lease and Interchange of Vehicles.

17. Commandant Instruction M4050.6, Paragraphs 2001 and 2003, Coast Guard Personal Property Transportation Manual.

18. Department of Defense Directive 5010.38, Management Control (MC) Program.

19. Department of Defense Directive 5158.4, United States Transportation Command.

20. Department of Defense Handbook, MIL-HDBK-129, Military Marking.

21. Department of Defense Instruction 4000.19, Interservice and IntraGovernmental Support.

22. Department of Defense Instruction 4100.31, Reports on Single Manager Operations.

23. Department of Defense Instruction 4500.17, Proceedings Before Transportation Regulatory Bodies.

24. Department of Defense Instruction 4500.42, DOD Transportation Reservation and Ticketing Services.

25. Department of Defense Federal Acquisition Regulation Supplement.

26. Department of Defense Regulation 4140.1, Materiel Management Policy.

27. Deputy Under Secretary of Defense (Logistics) Memorandum, Defense Transportation Regulation (DTR), 4 August 1995.

28. DoD Gen 43/DA Pam 740-2/NAVSUP 591/AFJPAM 24-225/MCO 4600.35C/COMDTPUB P4640.4, Moving Your Mobile Home.

29. Domestic Personal Property Rate Solicitation.

30. Environmental Protection Agency, Clean Air Act.

31. Federal Acquisition Regulation.

32. Federal Acquisition Regulation Clause 52.246-4, Inspection of Services-Fixed-Price.

33. Federal Acquisition Regulation Clause 52.246-14, Inspection of Transportation.

34. Federal Acquisition Regulation, Subchapter A, Part 9, Contractor Qualifications.

35. Federal Acquisition Regulation Part 28.307.2, Liability.

36. Federal Acquisition Regulation, Subchapter G, Part 44, Subcontracting Policies and Procedures.

37. Federal Acquisition Regulation, Subchapter H, Part 52.247-2, Permits, Authorities, or Franchises.

38. Federal Specification PPP-B-601H, Boxes, Wood, Cleated Plywood.

39. International Personal Property Rate Solicitation.

40. International Personal Property Rate Solicitation, Item 1706, Random Number Table.

41. Joint Federal Travel Regulations, Appendix A, Definitions and Acronyms.

42. Joint Federal Travel Regulations, Volume 1.

43. Joint Federal Travel Regulations, par. U5310, Basic Entitlement.

44. Joint Federal Travel Regulations, par. U5310-F, Excess Costs for Transportation of Boats as HHG.

45. Joint Federal Travel Regulations, par. U5320-D, Personally-Procured Transportation and NTS.

46. Joint Federal Travel Regulations, par. U5330-F5, HHG Removed from Mobile Home to Meet Safety Requirements.

47. Joint Federal Travel Regulations, par. U5335-E, When Shipment Weight Is Unobtainable.

48. Joint Federal Travel Regulations, par. U5340-A, Excess Charges.

49. Joint Federal Travel Regulations, par. U5372, HHG Transportation When Member Officially Reported As Dead, Injured, Ill, Absent For More Than 29 Days In A Missing Status, Or Upon Death.

50. Joint Federal Travel Regulations, par. U5375-B2 and B3, Time Limits.

51. Joint Federal Travel Regulations, par. U5380, Non-temporary Storage.

52. Joint Federal Travel Regulations, par. U5410, Transportation.

53. Joint Federal Travel Regulations, par. U5435-B, Alternate Ports.

54. Joint Federal Travel Regulations, par. U5455, POV Transportation Under Unusual Or Emergency Circumstances.

55. Joint Federal Travel Regulations, par. U5545, Mobile Home Transportation When Member Officially Reported As Dead, Injured, Ill, Absent For More Than 29 Days In A Missing Status, Or Upon Death.

56. Joint Federal Travel Regulations, par. U5500, General.

57. Joint Travel Regulations, Appendix A, Definitions.

58. Joint Travel Regulations, Volume 2.

59. Joint Travel Regulations, Volume 2, Chapter 8, Part C, Section 1, Methods.

60. Joint Travel Regulations, par. C6051, Responsibility.

61. Joint Travel Regulations, par. C6059, Baggage Transportation.

62. Joint Travel Regulations, par. C6060, POV Transportation.

63. Joint Travel Regulations, par. C8010, HHG Shipment Expenses.

64. Joint Travel Regulations, par. C8010-B, Employee Paid Expenses.

65. Joint Travel Regulations, par. C8105-D, Constructive Weight.

66. Joint Travel Regulations, par. C8210B, Employee-Arranged Move.

67. Joint Travel Regulations, par. C8120-C, Administrative Expense.

68. Joint Travel Regulations, par. C8605-B, Justification.

69. Joint Travel Regulations, par. C10000, Privately Owned Mobile Homes.

70. Joint Travel Regulations, par. C11004, Authority.

71. Joint Travel Regulations, par. C11004-B.2.d, Alternate Ports.

72. Marine Corps Order P4600.39, Paragraph 3204, Marine Corps Personal Property Transportation Manual.

73. Military Handbook-129, Marking for Shipment and Storage.

74. Military Traffic Management Command Pamphlet, Shipping Your POV.

75. Military Traffic Management Command Pamphlet 55-4, How to Do Business in the DOD Personal Property Program.

76. Military Traffic Management Command Pamphlet 55-12, Commercial Containers for Department of Defense Household Goods Shipments.

77. Naval Supply Systems Command Publication 490, Transportation of Personal Property.

78. Public Law 100-562, Imported Vehicle Safety Compliance Act of 1988.

79. Under Secretary of Defense (Acquisition and Technology) Memorandum, Assignment of Defense Transportation Operational Regulations and Procedures Authority to Commander in Chief, U.S. Transportation Command (CINCTRANS), 18 November 1998.

80. United States Code, 5 U.S.C. § 5701(2), Definitions.

81. United States Code, 10 U.S.C. § 162, Combatant Commands: Assigned Forces; Chain of Command.

82. United States Code, 15 U.S.C. § 645(d), Offenses and Penalties.

83. United States Code, 18 U.S.C. § 1001, Statements or Entries Generally.

84. United States Code, 26 U.S.C. § 6050M, Returns Relating to Persons Receiving Contracts from Federal Executive Agencies.

85. United States Code, 26 U.S.C. § 6041, Information at Source.

86. United States Code, 26 U.S.C. § 6041A, Returns Regarding Payments of Remuneration for Services and Direct Sales.

87. United States Code, 27 U.S.C. § 178.31, Delivery by Common or Contract Carrier.

88. United States Code, 31 U.S.C. § 3325(d), Vouchers.

89. United States Code, 31 U.S.C. § 7701(c), Taxpayer Identifying Number.

90. United States Code, 38 U.S.C. § 101(2), Definitions.

91. United States Code, 38 U.S.C. § 101(16), Definitions.

92. United States Code, 46 U.S.C. § 1242, Shipping.

93. United States Code, 49 U.S.C. Chapter 301, Motor Vehicle Safety.

94. United States Code, 49 U.S.C. Chapter 305, National Motor Vehicle Title Information System.

95. United States Code, 49 U.S.C. Chapter 443, Insurance.

96. United States Code, 50 U.S.C. § 196, Emergency Foreign Vessel Acquisition; Purchase Or Requisition Of Vessels Lying Idle In United States Waters.

97. United States Transportation Command Regulation 110-5, United States Transportation Command (USTRANSCOM) Acquisition Oversight Group (AOG).

ABBREVIATIONS AND DEFINITIONS

The following word/phrase definitions are provided for use in conjunction with this Regulation, Part IV.

1. **Abbreviated Transportation Accounting Classification**. Alphanumeric code used in lieu of a full 23-character line accounting.

2. **Accessorial Charge**. Any rate or charge stated in a tariff, tender, or solicitation for accessorial services that is in addition to a linehaul rate.

3. **Accessorial Service**. A service performed by a carrier in addition to the linehaul.

4. **Acquired Dependent**. A military member's dependent acquired through marriage, adoption, or other action during the course of a member's current tour of assigned duty. The term does not include persons dependent on the member or children born of a marriage that existed before the beginning of a current tour.

5. **Active Duty**. Full-time duty in the active service of a Uniformed Service, and includes full-time training duty, annual training duty, full-time National Guard duty, and attendance, while in the active service, at a school designated as a Service school by law or by the Secretary concerned. (NOTE: A member is on active duty while in a travel status or while on authorized leave.)

6. **Actual Placement**. The placing of a carrier conveyance in an accessible position for loading or unloading, or at a place previously designated by the consignor or consignee.

7. **Actual Value Rate**. A rate based on the actual value of the material shipped.

8. **Advance Shipping Notice**. A system to accurately project cargo arrival by weight, cube, and channel at Air Mobility Command Aerial Ports of Embarkation regardless of operational tempo, in time to impact aircraft scheduling.

9. **Aerial Port**. An airfield that has been designated for the sustained air movement of personnel and materiel as well as an authorized port of entrance into or departure from the country where located.

10. **Aerial Port of Debarkation**. A station that serves as an authorized port to process and clear aircraft and traffic for entrance to the country where located.

11. **Aerial Port of Embarkation**. A station that serves as an authorized port to process and clear aircraft and traffic for departure from the country where located.

12. **Agency**. Includes: 1. An Executive agency, as defined in 5 U.S.C. §101; 2. A military department; 3. An office, agency or other establishment in the legislative branch; and 4. The Government of the District of Columbia.

13. **Agent, Carrier**. A business firm, corporation, or individual acting for or in behalf of a carrier. A bona fide agent of a personal property carrier, as distinguished from a broker, is a person who, or a business enterprise which, represents and acts for a motor carrier or freight forwarder and performs its duties under the direction of the carrier pursuant to a pre-existing agreement with the carrier, providing for a continuing relationship between them.

    a. Booking Agent. An agent designated on the Letter of Intent (LOI) by a carrier as the single point of contact to act in its behalf.

    b. General Agent. A general agent is a business entity employed as a carrier's representative in a country or specified geographic area. A general agent cannot act as a local agent unless so designated on the carrier's LOI. The carrier, not the general agent, is responsible for all payments, rating filings, and control of shipments.

14. **Agreed Valuation**. The value of articles in a freight shipment agreed upon as the basis on which the freight rate is assessed. This valuation establishes a value beyond which recovery cannot be made in event of loss or damage in transit.

15. **Airlift Clearance Authority**. A Service activity which controls the movement of cargo (including personal property) into the airlift system under the provisions of DOD 4500.9-R, Defense Transportation Regulation (DTR), Part II, Cargo Movement.

16. **Air Mobility Command**. An Air Force major command and United States Transportation Command Air Force component with the primary responsibility for Department of Defense strategic airlift.

17. **Air Terminal**. A facility that functions as an air transportation hub and accommodates the loading and unloading of aircraft and in-transit processing of traffic. The airfield on which the air terminal is located may or may not be designated an aerial port.

18. **Alternate Privately Owned Vehicle (POV) Port**. A port selected by the member and authorized by the Service concerned for movement of a POV in lieu of the authorized port, for personal convenience.

19. **Air Mobility Command Channel Structure**. Aerial Port of Embarkation and Aerial Port of Debarkation pairs between which common-user airlift may be provided on a scheduled basis. A channel does not represent actual aircraft routing, although the two may be the same.

20. **Ammunition/Explosives**. A device charged with explosives, propellants, and pyrotechnics, initiation composition of nuclear, biological, or chemical material for use in connection with defense or offense, including demolition. This also includes ammunition used for training, ceremonial, or non-operational purposes.

21. **Appeal**. A procedure that allows reconsideration of a carrier semi-annual score, suspension, non-use, or disqualified status.

22. **Appliance Servicing**. Preparation of household appliances at origin to withstand handling-in transit or in storage and reversal of the process at destination.

23. **Area of Operation**. A specifically defined geographic area established by a Personal Property Shipping Office within an area of responsibility for traffic distribution purposes.

24. **Area of Responsibility**. A specifically defined geographic area where one military installation has been designated the responsibility for acquisition of transportation, storage, and related personal property movement services.

25. **Armed Forces (Military Services)**. The Army, Navy, Air Force, Marine Corps, and Coast Guard.

26. **Armed Forces of the United States**. A term used to denote collectively all components of the Army, Navy, Air Force, Marine Corps, and Coast Guard. (See "United States Armed Forces".)

27. **Attempted Pickup and/or Delivery Charge**. See Applicable Rate Solicitation.

28. **Authorized Privately-Owned Vehicle (POV) Port**. Designated port to be used for loading and unloading POVs.

29. **Auxiliary Services**. See Applicable Rate Solicitation.

30. **Baggage, Accompanied**. Baggage that consists of coats, brief cases, suitcases, and similar luggage that accompanies a traveler free under carriers' tariffs on a transportation ticket.

31. **Baggage, Unaccompanied**. The part of a member's/employee's prescribed weight allowance of household goods (HHG) that:

    a. Is not carried free on a ticket used for personal travel.

    b. Ordinarily is transported separately from the major bulk of HHG.

    c. Usually is transported by an expedited mode because it is needed immediately or soon after arrival at destination for interim housekeeping pending arrival of the major portion of HHG.

    NOTE 1: Unaccompanied baggage in connection with permanent change of duty station, Renewal Agreement Travel, consecutive overseas tour, or in place consecutive overseas tour may consist of personal clothing and equipment, essential pots, pans, and light housekeeping items; collapsible items such as cribs, playpens, and baby carriages; and other articles required for the care of dependents. Items such as refrigerators, washing machines, and other major appliances or furniture must not be included in unaccompanied baggage.

NOTE 2: In connection with an extended temporary duty assignment, unaccompanied baggage is limited to the necessary personal clothing and effects for the individual and equipment directly related to the assignment.

32. **Best Value**. Selection of contractors/carriers to support Defense Transportation System requirements will be based on a trade-off between cost and other factors, such as past performance and ability to perform service within stated requirements. Low cost will not be the primary factor and it is possible that the low cost carrier will not receive the award in a best value selection. Past performance factors could be: on-time pickup and delivery percentage, lost or damaged cargo percentage, and number of claims. Service factors could be: in-transit visibility ability; response time for requirement, and routing ability.

33. **Bill of Lading Office Code (BLOC)**. A four-letter alpha code that identifies the installation or activity responsible for shipments moving under bills of lading. BLOCs are used for internal accounting purposes and for the distribution of information to the installations or activities.

34. **Blue Bark**. The term is used to designate a personal property shipment of a deceased member/employee.

35. **Call Number or Lot Number**. A locally assigned control number provided by the ordering activity when a requirement for services is placed with the contractor. For inbound shipments, the number is normally assigned when the Personal Property Shipping Officer receives the freight bill or written receiving notice from the contractor. For outbound or local drayage shipments, the number is normally assigned at the time the order is placed with the contractor.

36. **Cargo**. Supplies, materials, stores, baggage, or equipment transported by land, water, or air.

    Bulk (freight). That which is generally shipped in volume where the transportation conveyance is the only external container; such as liquids, ore, or grain.

    Containerizeable Cargo. Items that can be stowed or stuffed into a container.

    Non-Containerizeable Cargo. Items that cannot be stowed or stuffed into a container (i.e., over-sized or overweight cargo).

    Source Stuffed Cargo. Cargo that economically fills a container from a single origin point.

37. **Carrier**. Any individual, company, or corporation commercially engaged in transporting cargo, passengers, or household goods. A business entity that holds state or federal permits or certificate for the movement of personal property and/or mobile homes. Carriers are further defined in the International Through Government Bill of Lading program as follows:

a. Primary Carrier. The carrier who establishes the low rate for an incentive traffic channel during the traffic distribution period. A primary carrier is also referred to as a rate setter.

b. Equalization Carrier. Any carrier meeting the low rate for an incentive traffic channel becomes an equalization carrier. Equalization carriers share the remaining traffic not tendered to the primary carrier.

c. Other Participating Carrier. A carrier that neither sets nor equalizes the low rate but instead files a higher rate is a participating carrier.

38. **Carrier Accepted Rate and Certification Printout with Error Listing**. See Applicable Rate Solicitation.

39. **Carrier, DOD-Approved**. Any carrier, as defined above, approved by the Commander, Military Traffic Management Command, for participation in the Department of Defense Personal Property Shipment and Storage Program.

40. **Channel Airlift**. Common-user airlift service provided on a recurring basis between two points.

41. **Channel Sequence Listing**. A listing of approved active Air Mobility Command (AMC) channels prepared annually by Headquarters AMC and distributed to all users of AMC airlift.

42. **Channel Traffic**. Passengers and cargo moving over established worldwide routes served by either scheduled Department of Defense aircraft under the control of Air Mobility Command (AMC) or commercial aircraft under contract to and scheduled by AMC.

43. **Civil Agencies**. All agencies in the federal Government other than Department of Defense installations and activities, e.g., General Services Administration.

44. **Claim**. A written legal demand for payment of goods lost or damaged in shipment.

45. **Claims Office**. The office responsible for filing claims on behalf of the Department of Defense (DOD) against carriers, contractors, stevedores, or vendors for loss or damage. This may be the finance center for continental United States commercial carriers; Military Traffic Management Command Operations Center for commercial ocean carriers; or the responsible contracting officer for stevedores, vendors, and other contractors. For claims arising from loss or damage to personal property shipments, the claims office is also the office responsible for receiving and processing claims by members of the DOD components for loss or damage to their personal property. This office may or may not be the same office that asserts recovery claims against carriers, warehouses, and other third parties after the member's claim has been paid. In the Army and Air Force, claims offices are usually found in the installation legal office. In the Navy, the installation transportation office, a Navy Legal Services Office, or the installation legal office may function as a claims office.

46. **Clearance Authority**. The activity that controls and monitors the flow of cargo into the airlift or water transportation system. (See Airlift Clearance Authority, Ocean Cargo Clearance Authority, and Water Clearance Authority).

47. **Close Blood or Affinitive Relative**. A permanent member of a household, a resident in the household of a military member, a Department of Defense civilian employee, or an American Red Cross employee, who is dependent on the sponsor for a home. This does not apply to a dependent as defined in "Dependent" below.

48. **Code/Mode Guide**. The Code/Mode Guide is no longer published by Headquarters Military Traffic Management Command (MTMC). The code 3 Ocean Compensation Factors and the Direct Procurement Method Commercial Air Rates may be viewed on the MTMC website: https://www.mtmc.army.mil. The Code J and Code T additive is reflected in the total cost in the Transportation Operational Personal Property System.

49. **Codes of Service**. The following are definable types of service under the Through Government Bill of Lading method:

    a. Domestic Motor Van (Code 1). Movement of household goods whereby the carrier provides packing, pickup, and loading in a motor van from origin residence in the continental United States (CONUS) to destination residence in CONUS. Automated systems will use Code 1A for interstate movements and Code 1B for intrastate movements.

    b. Domestic Container (Code 2). Movement of household goods whereby the carrier provides packing, pickup, and loading in containers from origin residence in CONUS to destination residence in CONUS. Automated systems will use Code 2A for interstate movements and Code 2B for intrastate movements.

    c. International Door-to-Door Container (Code 3). Carrier provides origin services, linehaul service from Origin residence to a commercial ocean terminal, ocean transportation using the Military Traffic Management Command Operations Center Universal Service Contract (USC02) rates for over the ocean portion of the shipment, linehaul to destination residence, and destination services.

    d. International Door-to-Door Container (Code 4). Movement of household goods in Military Traffic Management Command (MTMC)-approved door-to-door shipping containers (wooden boxes) whereby a carrier provides linehaul service from origin residence to ocean terminal, ocean transportation to port of discharge, and linehaul service to destination residence, all without rehandling of container contents.

    e. International Door-to-Door Container Government Ocean Transportation (Code 5). Movement of household goods in MTMC-approved door-to-door shipping containers (wooden boxes) whereby a carrier provides linehaul service from origin residence to military ocean terminal, the Government provides ocean (Military Sealift Command) transportation to designated port of discharge, and the carrier provides linehaul service to destination residence, all without rehandling of container contents.

f. International Door-to-Door Air Container (Code 6). Movement of household goods whereby the carrier provides containerization at the origin residence, surface transportation to the airport nearest origin that can provide required services, air transportation to the airport nearest destination that can provide required services, and transportation to the destination residence.

g. International Land-Water-Land Baggage (Code 7). Movement of unaccompanied baggage whereby the carrier provides packing and pickup at origin, surface transportation to destination, and cutting of the banding and opening of the boxes at the destination residence.

h. International Land-Air-Land Baggage (Code 8). Movement of unaccompanied baggage whereby the carrier provides packing and pickup at origin, transportation to the origin airport, air transportation to the destination airport, surface transportation to destination, and cutting of the banding and opening of the boxes at the destination residence.

i. International Door-to-Door Container - Air Mobility Command (AMC) (Code T). Movement of household goods whereby the carrier provides containerization at the origin residence and transportation to the designated AMC terminal. AMC provides terminal services at both origin and destination and air transportation to the designated AMC destination terminal. The carrier provides transportation to the destination residence.

j. International Land-Air (AMC)-Land Baggage (Code J). Movement of unaccompanied baggage whereby the carrier provides packing and pickup at the origin and transportation to the designated AMC terminal. AMC provides terminal services at both origin and destination and air transportation to the designated AMC destination terminal. The carrier provides transportation to destination from AMC terminal and cutting of the banding and opening of the boxes at the destination residence.

50. **Commercial Bill of Lading**. Carrier documentation used for transportation of shipments, such as that used by small package express carriers. It includes the commercial procedures related to the use of such documentation.

51. **Commercial Carrier**. Common, contract, for-hire, and private carriers.

52. **Commuting Area**. A distance designated by the military Services from an origin or destination point.

53. **Complete Service**. The rate bid per each item includes all related services, such as long carry, stairs, elevators, excessive distances, etc., necessary to perform the complete pickup and delivery of the personal property shipment.

54. **Consignee**. The recipient (unit, depot, or person) to whom cargo/personal property is addressed or consigned for final delivery. The activity that is receiving the product.

55. **Consignor**. The person or activity that is the supplier or shipper of a product.

56. **Consolidated Booking Office/Consolidated Booking Agency**. A Personal Property Shipping Office (PPSO), staffed and operated by a single military service, which provides consolidated booking of personal property shipments and selected traffic management functions in support of designated PPSO/Personal Property Processing Offices activities within an assigned area of responsibility.

57. **Consolidated Personal Property Shipping Office**. An activity staffed and operated by one military Service in support of all military Service components for acquisition of transportation, storage, and related services within a specified area of responsibility for movement of personal property for Department of Defense members/employees. Support is provided on a common service, nonreimbursable basis.

58. **Constructive Placement**. When a carrier conveyance cannot be placed for loading, unloading, or at a point previously designated by the consignor or consignee, and is placed elsewhere, it is considered as being under constructive placement and subject to tariff rules and charges.

59. **Container Household Goods**. An external shipping conveyance for the movement of personal property. Containers are used in both domestic and international movements. Personal property containers must be weather tight, fitted with at least one door (hinged or removable section), and capable of being handled and transported by existing equipment. Containers must be constructed to conform to minimum dimensional, material, and construction specifications.

60. **Container Handling Equipment**. Items of materiel handling equipment required to specifically receive, maneuver, and dispatch containers.

61. **Containerization (Household Goods)**. The stuffing or loading of personal property into exterior shipping containers.

62. **Container Ship**. A ship specifically constructed and equipped to carry only containers. Container ships are usually non-self-sustaining and do not have built-in capability to load or offload containers, and require port crane service. A container ship with shipboard installed cranes, capable of loading and off-loading containers without assistance of port crane service, is considered self-sustaining.

63. **Continental United States (Household Goods)**. As used in connection with household goods, includes all areas within the United States, excludes Hawaii. For purposes of soliciting rates for unaccompanied baggage, includes all areas within the contiguous United States, excluding Alaska and Hawaii.

64. **Contract Administration Office**. The activity responsible for administering the contract against which the shipment was made.

65. **Contracting Officer**. Any person who, either by virtue of position or by appointment in accordance with the Federal Acquisition Regulation or supplements thereto, is currently a contracting officer with the authority to enter into and administer contracts and make determinations and findings with respect thereto or with any part of such authority. The

term also includes the authorized representative of the contracting officer acting within the limits of his/her authority as delegated by the contracting officer.

66. **Cure Notice**. If a contract is to be terminated for default before the delivery date, a "Cure Notice" is required by the default clause. Before using this notice, it must be ascertained that an amount of time equal to or greater than the period of "cure" remains in the contract delivery schedule or any extension to it. If the time remaining in the contract delivery schedule is not sufficient to permit a realistic "cure" period of 10 days or more, the "Cure Notice" should not be issued.

67. **Customer**. Any authorized user of the Defense Transportation System.

68. **Customs Territory of the United States**. The fifty United States, the District of Columbia, and Puerto Rico. Not included are American Samoa, Guam, Johnston Island, Midway Island, the Virgin Islands of the United States, Wake Island, or the former Panama Canal Zone.

69. **Declared Valuation**. The value of goods, as stated by a shipper, when tendered to a carrier.

70. **Defense Table of Official Distances (DTOD)**. The Department of Defense standard source for worldwide distance information based on city-to-city distance (not zip code to zip code) replacing all other sources used for computing distance (except airplanes). For more information refer to the DTOD website at http://dtod-mtmc.belvoir.army.mil.

71. **Defense Transportation System (DTS)**. That portion of the Nation's transportation infrastructure that supports Department of Defense (DOD) common-user transportation needs across the range of military operations. It consists of those common-user military and commercial assets, services, and systems organic to, contracted for, or controlled by the DOD, except for those that are Service-unique or theater-assigned.

72. **Department of Defense Activity Address Code**. A distinct six-position alphanumeric code assigned to identify specific units, activities, or organizations as found in Department of Defense Activity Address Directory.

73. **Department of Defense Activity Address Directory**. A publication that lists all Department of Defense activities and their six-position alphanumeric codes called Department of Defense Activity Address Codes.

74. **Department of Defense-Approved Storage Facility**. Government-owned, approved, or leased facility used for storing household goods and mobile homes.

75. **Department of Defense (DOD) Foreign Clearance Guide**. A publication containing information pertaining to travel security, country clearances, identification credentials, and other entry requirements for travel into foreign countries.

76. **Dependent**. See the Joint Federal Travel Regulations Appendix A, (http://www.dtic.mil/perdiem/jftr/jftr-aa.txt) for definition of dependents for uniformed

Service members, and the Joint Travel Regulations, Appendix A, (http://www.dtic.mil/perdiem/jtr/jtr-aa.txt) for definition of dependents for Department of Defense civilian employees.

77. **Detention**. A charge made on a carrier conveyance held by or for a consignor or consignee beyond the allowable free time for loading or unloading, for forwarding directions, or for any other purpose authorized and documented by the consignor or consignee. Charges for detention are in addition to all other lawful transportation charges. Detention charges are typically associated with motor carriage.

78. **Dimension or Size Limitations**. Limitations imposed by state or local law or regulation governing overall width, length, and height of a vehicle, combination of vehicles, or combination of vehicles and cargo traveling over public roadways.

79. **Direct Procurement Method**. A method of shipment in which the Government manages the shipment throughout. Packing, containerization, local drayage, and storage services are obtained from commercial firms under contractual arrangements or by the use of Government facilities and personnel.

80. **Disability Cost**. Costs other than transportation linehaul and accessorial charges that are considered as part of the aggregate cost of a shipment for purposes of mode and carrier selection. Disability costs include costs resulting from procuring additional labor, materials, material handling, or fire fighting equipment on a temporary "as required" basis; labor charges for loading, unloading, blocking, and bracing; commercial rail switching of a rail car to a loading or unloading site; and drayage.

81. **Disqualification**. An action taken by the Military Traffic Management Command or theater Commander in Chief resulting in the exclusion of a carrier from transporting Department of Defense (DOD) shipments from one or more origin points for specific routes or for all routes. This also includes the exclusion of a carrier or storage firm from participation in the DOD Personal Property Shipment and Storage Program at one or more installations for a definite or indefinite period of time.

82. **Diversion**. A change to a new destination point more than 30 miles from the original destination point. Shipments requiring further over ocean transportation must be terminated and reshipped. (See Reconsignment.)

83. **Domicile**. An individual's home of record, place from which called (or ordered) to active duty, place of first enlistment, or place of permanent legal residence.

84. **Direct Procurement Method Commercial Air Solicitation**. A solicitation standardizing services performed by commercial air freight forwarders/carriers and centralizing receipt and processing of rates by the Air Mobility Command for the movement of crated household goods and unaccompanied baggage worldwide. These rates can be viewed on the Headquarters Military Traffic Management Command website: https://www.mtmc.army.mil.

85. **Drayage**. Schedule I - Drayage included applies in those instances when a shipment requires drayage to an air, water, or other terminal for onward movement after completion of the shipment preparation by the contractor. If it is being moved from a residence or other pickup point to the contractor's warehouse for onward movement by another freight company, carrier, etc., drayage not included applies. Schedule II - Drayage included means delivery of the shipment from destination contractor's facility or other destination point to the final delivery point as ordered. When shipment or partial removal of items from shipment is performed and prepared for member's/employee's pickup at destination delivery point, drayage not included applies.

86. **Drive-Away Service**. The movement of a vehicle under its own power by a driver of an authorized motor carrier. This method also includes the movement of one or more vehicles, including other than self-propelled vehicles, when towed or mounted (either full or saddle mount) upon a vehicle.

87. **Electronic Commerce**. Conducting business transactions and information exchange using automation and telecommunications without paper documents.

88. **Electronic Data Interchange**. Computer to computer exchange of business data using standards jointly developed by standard groups such as American National Standards Institute or Electronic Data Interchange Agency.

89. **Embargo**. To restrict or prohibit an acceptance or movement of freight, passengers, or personal property.

90. **Employee**. A civilian individual:

    a. Employed by an Agency (See Agency), regardless of status or grade.

    b. Employed intermittently as an expert or consultant and paid on a daily, while actually employed, basis.

    c. Serving without pay or at $1 a year (5 U.S.C. § 5701(2), Definitions) (also referred to as "invitational traveler" for temporary duty travel purposes only).

91. **En Route**. A personal property shipment is considered en route when moved from its origin location by the carrier until final placement at destination.

92. **Expediting**. Actions taken to insure movement to destination in the shortest time possible.

93. **Family Member**: See the Joint Federal Travel Regulations Appendix A, (http://www.dtic.mil/perdiem/jftr/jftr-aa.txt) for definition of family member for uniformed Service members, and the Joint Travel Regulations, Appendix A, (http://www.dtic.mil/perdiem/jtr/jtr-aa.txt) for definition of family member for Department of Defense civilian employees.

94. **Free Time**. Time allowed by contract, solicitation, tender, or tariff to load and/or unload carrier's equipment, or provide disposition instructions for personal property shipments before detention, demurrage, or waiting time is charged.

95. **Freight Forwarder**. A firm other than a railroad, motor, water, or air carrier which represents itself as a common carrier and undertakes to assemble and consolidate shipments or provide for assembling and consolidating and performing or providing for the performance of breakbulk and distributing; assumes responsibility for the transportation of such property from point of receipt to point of destination; and uses the services of carriers subject to the governing bodies.

96. **Government Bill of Lading**. A Government document used to procure transportation and related services from commercial carriers.

97. **Government-Owned Containers (GOCs)**. GOCs include all exterior wooden shipping containers purchased by the Government or constructed by the contractor for services under a contract. GOCs include containers meeting the requirements of Commercial Standard ASTM-D4169-01, Federal Specification PPP-B-601H, and Military Transportation Management Command Pamphlet 55-12. GOCs include all wooden exterior shipping containers purchased by the Government and received by the contractor awarded those services identified in Schedule II, Inbound Services.

98. **Government Storage Warehouse**. A Government-owned or leased facility used for storing household goods shipment.

99. **Gross Weight**. The aggregate weight of all articles plus necessary packing materials and shipping containers.

100. **Household Goods**. See the Joint Federal Travel Regulations, Appendix A (http://www.dtic.mil/perdiem/jftr/jftr-aa.txt) for uniformed members and the Joint Travel Regulations, Appendix A (http://www.dtic.mil/perdiem/jtr/jtr-aa.txt) for Department of Defense civilian employees for definitions of household goods.

101. **Inadequate Carrier Equipment or Facilities**. Carrier's equipment or facilities that are not sufficient for movement, storage, or protection of material while in carrier's custody. This includes equipment that is not safe, i.e., holes in equipment or equipment that cannot be properly secured to prevent pilferage, etc.

102. **Installation**. A post, camp, station, air base, naval base, yard, base complex, or port.

103. **Installation Transportation Officer**. See Transportation Officer.

104. **Interchange**. A kind of interline that involves the exchange of equipment.

105. **Interline**. The practice whereby a carrier transfers a shipment to another carrier at a point of joint service for delivery or further movement.

106. **International**. The movement of household goods or unaccompanied baggage between a point in the continental United States and a point in an overseas area.

107. **Interstate Shipment**. Any personal property or mobile home shipment originating in a state or the District of Columbia and destined for another state or the District of Columbia (moves within the District of Columbia are local moves and do not fit the intra or interstate categories).

108. **Intertheater**. The movement of household goods or unaccompanied baggage between one overseas theater and another overseas theater.

109. **In-Transit Visibility**. The ability to track the identity, status, and location of Department of Defense (DOD) unit and non-unit cargo (excluding bulk petroleum, oils, and lubricants) and passengers; medical patients; and personal property from origin to consignee or destination established by the Commanders in Chief, Military Services, or DOD Agencies during peace, contingencies, and war.

110. **Intrastate Rate Abstract**. A listing of rates provided by Headquarters Military Traffic Management Command to the Personal Property Shipping Offices indicating initial filing submissions for the rate cycle.

111. **Intrastate Shipment**. Any personal property or mobile home shipment originating in a state destined for the same state and transiting only that state.

112. **Intratheater**. The movement of household goods or unaccompanied baggage within one overseas theater.

113. **Issuing Officer**. Only authorized or acting Personal Property Shipping Offices may issue Personal Property Government Bills of Lading (PPGBL). Such authorized persons may be military personnel or civilian employees of the Government on duty at the issuing office. As stated in 41 CFR §101-41.302-4, accountability for PPGBLs used by a contractor-shipper remains with the issuing office. Thus, the name and title of the issuing officer and the name and address of the issuing office, rather than those of the contractor-shipper must appear on the PPGBL.

114. **Item or Article**. The terms item and article used in this Regulation are interchangeable. Each shipping piece or package and the contents thereof constitute one item.

115. **Joint Personal Property Shipping Office (JPPSO)**. A JPPSO is an activity staffed and operated by members from two or more military services, in support of all military service components for acquisition of transportation, storage, and related services within a specified area of responsibility for movement of personal property for Department of Defense members. Support is provided on a common service, nonreimbursable basis.

116. **Julian Date**. This date chain, composed of a four-digit numeric figure, indicates the year and day of the year. This four-digit number is composed of the last number of the year and day of the year, in that sequence. Example: 25 October 2002 = 2298.

117. **Kilogram**. One kilogram is equal to 2.2046 pounds. To convert kilograms into pounds, multiply kilograms by 2.2046 factor. To convert pounds into kilograms, multiply pounds by 0.453 factor.

118. **Knocked Down**. An article taken apart so as to materially reduce the space it will occupy while being transported.

119. **Letter of Intent (LOI)**. A standard format letter submitted by carriers acknowledging a carrier's intent to do business at an installation. A LOI must contain codes of service and agent representation.

120. **Light and Bulky Articles**. Articles which have a low weight per cubic foot of space occupied. Such articles are usually made subject to the provisions of the Standard Transportation Commodity Codes. For personal property, see rate solicitation.

121. **Linehaul**. Transportation of cargo over carrier routes from point of origin to destination, excluding local pickup, delivery, local drayage, and switching services.

122. **Local Move**. Involves Household Goods (HHG) drayage, storage when approved, or shipment for a short distance between residences; to or from a nontemporary storage facility in the area of the member's permanent duty station (PDS); in the area of the member's last PDS when the member is authorized a final move during a separation or retirement; incident to reassignment or permanent change of station (PCS) to a new PDS near the old PDS; between residences within a metropolitan area; or not during a PCS, a move between residences within the daily commuting distance of the PDS. A local move of HHG includes necessary packing, crating, hauling, storage when approved, unpacking and uncrating.

123. **Lot**. Those household goods placed in storage at Government expense and covered by one service order.

124. **Lot Number**. See Call Number.

125. **Materials Handling Equipment**. Mechanical devices for handling of supplies with greater ease and economy.

126. **Member**. A commissioned officer, commissioned warrant officer, warrant officer, and enlisted person, including a retired person, of the Uniformed Services. (NOTE: "Retired person" includes members of the Fleet Reserve and Fleet Marine Corps Reserve who are in receipt of retainer pay.)

127. **Military Sealift Command**. A major command of the United States Navy and the United States Transportation Command's component command responsible for designated common-user sealift transportation services to deploy, employ, sustain, and redeploy United States forces on a global basis.

128. **Military Services**. The Army, Navy, Air Force, Marine Corps, and Coast Guard.

129. **Military Traffic Management Command**. A major command of the United States Army and the United States Transportation Command's component command responsible for designated continental United States land transportation as well as common-user water terminal and traffic management service to deploy, employ, sustain, and redeploy United States forces on a global basis.

130. **Mobile Home**. A mobile dwelling constructed or converted and intended for use as a permanent residence and designed to be moved, either self-propelled or by towing. It includes a house trailer, a privately-owned railcar converted for use as a residence, and a boat a member/employee uses as the place of principal residence as well as all household goods and professional books, papers, and equipment contained in the mobile home and owned or intended for use by the employee or dependents.

131. **Naval Transportation Support Center**. Provides worldwide transportation/physical distribution services for United States Navy afloat and ashore activities plus pay and accounting services for Navy transportation.

132. **Net Weight**. The net weight of shipments transported in containers will be the difference between the tare weight of the empty container and the gross weight of the packed container.

133. **Non-Temporary Storage (NTS)**. Long-term storage of household goods in lieu of transportation. NTS includes necessary packing, crating, unpacking, uncrating, transportation to and from place of storage, storage, and other directly related necessary services.

134. **Ocean Cargo Clearance Authority**. The Military Traffic Management Command activity which books Department of Defense (DOD) sponsored cargo and passengers for surface movement, performs related contract administration, and accomplishes export/import surface traffic management functions for DOD cargo moving within the Defense Transportation System.

135. **One-Time-Only Rates**. Rates solicited by Headquarters Military Traffic Management Command from individual carriers for the one-time movement of personal property over a specific origin-destination channel for which rates are not otherwise published.

136. **Operating Authority**. An authorization issued by a regulatory body for a commercial carrier to perform transportation service, sometimes within specific limitations.

137. **Opportune Lift**. That portion of lift capability available for use after planned requirements have been met.

138. **Ordering Officer**. The contracting officer of a using activity or a Government individual appointed by the contracting officer authorized to order services under the contract.

139. **Outsize Air Cargo**. Cargo or containers in a shipment, including consolidated shipments, that have any exterior measurement greater than 72 inches in any dimension (length, width, or height).

140. **Overall Costs**. The sum of all costs that are known or that can be estimated reasonably in connection with the movement of personal property.

141. **Overseas**. Any country or place beyond the limits of the 48 contiguous United States (US) and the District of Columbia. For purposes of this Regulation, Alaska, Hawaii, Puerto Rico, and US territories and possessions are considered overseas.

142. **Packaging**. The processes and procedures used to protect materiel from deterioration, damage, or both. It includes cleaning, drying, preserving, packing, marking, and unitization.

143. **Packed by Owner**. Those articles packed in a container by the owner.

144. **Packing**. Assembly of packaged items into a shipping container with necessary blocking, bracing, cushioning, weatherproofing, reinforcement, and marking.

145. **Partial Loss**. Indicates partial loss of contents of shipment units, other than by theft or pilferage. This includes spillage, leakage, or evaporation from the contents of bottles, barrels, or similar containers.

146. **Personally-Procured Move**. An option for moving personal property available to military members in receipt of Permanent Change of Station, Separation, Retirement, or Temporary Duty orders.

147. **Personal Property**. Household goods, unaccompanied baggage, privately owned vehicles and mobile homes, as defined in the Joint Federal Travel Regulations and the Joint Travel Regulations.

148. **Personal Property Processing Office (PPPO)**. An activity designated to provide members a local point of contact for the purpose of counseling and processing applications and to forward completed applications to the responsible Personal Property Shipping Office, Consolidated Booking Office (CBO)/Consolidated Booking Activity (CBA), Consolidated Personal Property Shipping Office, or Joint Personal Property Shipping Office. Additionally, a PPPO supported by a CBO/CBA may be assigned specific functions such as inbound quality assurance and claims.

149. **Personal Property Shipping Office**. An activity designated to provide traffic management, counseling, and application processing within a designated area of responsibility, which includes acquisition of transportation, storage, and related services.

150. **Pilferage**. The act of stealing in small quantities. Used in reference to missing cargo or personal property that is easily converted to money, has intrinsic value, or a commercial use.

151. **Port of Debarkation**. The geographic point at which cargo or personnel are discharged. May be a seaport or aerial port of debarkation. For unit requirements, it may or may not coincide with the destination.

152. **Port of Embarkation**. The geographic point in a routing scheme from which cargo or personnel depart. May be a seaport or aerial port from which personnel and equipment flow to a port of debarkation. For unit and non-unit requirements, it may or may not coincide with the origin.

153. **Professional Books, Papers, and Equipment (PBP&E)**. (Also called PRO or PRO-Gear.) Articles of household goods in a member's/employee's possession needed for the performance of official duties at the next or a later destination. Examples include: (1) reference material; (2) instruments, tools, and equipment peculiar to technicians, mechanics, and members/employees of the professions; (3) specialized clothing such as diving suits, astronauts' suits, flying suits and helmets, band uniforms, chaplains' vestments, and other specialized apparel not normal or usual uniform or clothing; (4) communication equipment used by members/employees in association with the Military Affiliated Radio Station (5) individually owned or specially issued field clothing and equipment; (6) an official award given to a members/employees by a Service (or a component thereof) for service performed by the members/employees in the member's/employee's capacity or by a professional society/organization/United States or foreign Government for significant contributions in connection with official duties; and (7) personal computers and accompanying equipment used for official Government business (i.e., central processing unit, monitor, keyboard, mouse, one printer, one set of small computer speakers). NOTE: Excluded from PBP&E are sports equipment, and office, household, or shop fixtures or furniture (such as bookcases, study/computer desks, file cabinets, and racks) of any kind even though used in connection with the PBP&E.

154. **Pro Number**. The abbreviation of the word progressive and is usually prefixed to an agent's record numbers on freight bills, etc.

155. **Rate Cancellation Messages**. Messages dispatched by Headquarters Military Traffic Management Command to all shipping offices twice during each rate cycle. These messages cancel existing rates at the installation and should be posted on a timely basis in order to ensure that a shipment is not tendered to a carrier without an effective rate on file.

156. **Rate Cycles**. A six-month period of time during which rates filed by carriers is effective. Normal rate cycles begin May 1 and November 1 for domestic traffic and April 1 and October 1 for international traffic.

157. **Rate Solicitation**.

   a. Personal Property Rate Solicitation. A publication containing rules, definitions, services, rates, and charges for personal property shipments.

   b. Mobile Home Rate Solicitation. The rules and regulations governing the movement of mobile homes.

158. **Real Property Damage**. Damages caused to a Department of Defense (DOD) member's/employee's private/rental property, or grounds associated with the property by a DOD approved carrier/agent or direct procurement method contracted agent while picking up or delivering DOD sponsored shipments.

159. **Receiver**. The activity or agency at which the Defense Transportation System shipment terminates. The activity is usually the ultimate consignee, but may also be the agent for the ultimate consignee, e.g., a central receiving point or a temporary storage point for the ultimate consignee.

160. **Reconsignment**. Household goods shipments terminated for the convenience of the Government and require over ocean transportation either by air or water. The onward movement of property will be treated as a new shipment under a new Personal Property Government Bill of Lading.

161. **Regional Storage Management Office**. An office designated by Commander, Headquarters Military Traffic Management Command, to perform contract administration for the Department of Defense Personal Property Shipment and Storage Program within an assigned geographic area.

162. **Released Value Rate**. A rate applied to a shipment that specifically limits carrier liability in case of loss or damage.

163. **Required Delivery Date (RDD)-Household Goods**. A specified calendar date on or before which the carrier agrees to offer the entire shipment of personal property for delivery to the member/employee or member's/employee's agent at destination. If the RDD falls on a Saturday, Sunday, Foreign National, US National, or state holiday, the RDD will be the following working day.

164. **Required Port Delivery Date (RPDD)**. In accordance with the Advance Shipping Notice, the RPDD is a specified calendar date the carrier/contractor agrees to deliver Code J and/or Direct Procurement Method unaccompanied baggage shipments to the Aerial Port of Embarkation as specified on the bill of lading and required by the tender of service/rate solicitation or contract. If the RPDD falls on a Saturday, Sunday, Foreign National, US National, or state holiday, the RPDD will be the following working day.

165. **Routing Authority**. An activity that designates modes and/or provides routing instructions for shipments requiring clearance prior to movement.

166. **Routing Instruction Note(s)**. Codes used on Route Orders to identify conditions and stipulations required.

167. **Satisfactory Service**. Performance that meets the moving, handling, and storage standards; the provisions of tenders of service; and all contractual requirements.

168. **Service Failure**. Carrier non-compliance with tenders, tariffs, contracts, laws, regulations, Government Bill of Lading instructions, or commitments to the shipper(s).

169. **Shipment Container (Household Goods)**. External container, crate, tri-wall, or other Government-approved container into which individual articles and/or packing cartons are placed.

170. **Shipping/Item Discrepancies**. Any variation in quantity or condition of goods received from that shown on the covering authorized shipping documents, purchase orders, or other authorized shipping document. This includes lost or damaged parcel post shipments or other discrepancies not the result of a transportation error.

171. **Shortage**. The condition that exists when the number of pieces of freight (packaged or loose) received is less than the number recorded on the bill of lading or governing document.

172. **Short Distance Move**. See Local Move.

173. **Sponsoring Service**. The Department of Defense Component that validates initial requirements and is sponsoring a particular activity, movement, or operation.

174. **Standard Carrier Alpha Code**. A four-digit alpha code assigned to each carrier by the National Motor Freight Traffic Association to identify that carrier in the various procedures and documents used in the Department of Defense Personal Property Shipment and Storage Program.

175. **Standard Point Location Code**. A code consisting of alphanumeric characters, which is assigned to each rate area for the purpose of geographical accounting.

176. **Stop-Off**. An authorized stop to load or off-load partial shipments.

177. **Storage**. A shipment held in a carrier's custody or stored by the carrier in a public or licensed warehouse at the request of the consignee.

    a. Temporary Storage. Storage in connection with a linehaul movement of personal property that is acquired either by Personal Property Government Bill of Lading or contract. Such storage is cumulative and may accrue at origin, in transit, at destination or any combination thereof.

    b. Nontemporary Storage (NTS) of Household Goods (HHG). Long-term storage of HHG in lieu of transportation. NTS includes necessary packing, crating, unpacking, uncrating, transportation to and from place of storage, storage, and other directly related necessary services.

178. **Stuffing/Stowing**. Packing or containerizing cargo or household goods into a container.

179. **Supported Service or Agency**. Military Services or Agency whose member's/employee's personal property is being moved.

180. **Tally or Tally and Count**. Record of actual count of shipment pieces or containers.

181. **Tariff**. A publication containing rates, rules, regulations, and charges applying to commercial/military transportation and accessorial services.

182. **Tariff Weight**. Weight standard agreed upon in tariffs.

183. **Tender**. A typed or electronic voluntary or negotiated offer by a qualified carrier to provide transportation service to the United States Government at specified rates or charges and submitted by the carrier to a central authority for official acceptance and authorization for use to route traffic.

184. **Through Government Bill of Lading**. A bill of lading that is issued by a United States Government activity to document through movement from initial point of origin to final destination.

185. **Traceable Means**. A transportation service that provides accountability for a shipment.

186. **Tracing**. Action to determine the location of a shipment.

187. **Traffic**. Cargo, including personal property shipments, mail, passengers, patients, security courier material, accompanied baggage, and human remains. Outbound traffic is that which originates in the continental United States (CONUS) and is destined for an area outside of the CONUS. Inbound traffic is that which originates outside of the CONUS and is destined to or moving in the general direction of the CONUS.

188. **Tonnage Distribution Report (TDR)**. A method of recording distribution of personal property shipments to commercial carriers.

189. **Traffic Management**. The direction, control and supervision of all functions incident to the procurement and use of cargo, passenger and personal property transportation services (including rail, highway, air, sea, pipeline, inland waterway, coastal, intercoastal carriers, and organic assets).

190. **Transit Times**. The established time for the movement of a shipment from origin to destination. This time is determined by counting the day after pickup as the first day. Saturdays and Sundays are counted as part of the transit time.

191. **Transportation Agent**. An individual designated to assume responsibilities of the Transportation Officer (TO). These responsibilities may include administering and/or signing contracts and other documentation which would normally require the signature of the TO; and performing service-unique procedures, etc.

192. **Transportation Working Capital Fund (TWCF)**. TWCF is the United States Transportation Command portion of the Working Capital Funds transportation business area.

193. **Transportation Control Movement Document, DD Form 1384**. A form used to control the movement of property while in the Defense Transportation System and performs functions similar to a bill of lading in the commercial transportation system.

194. **Transportation Control Number**. A 17-position number assigned to control a shipment throughout the transportation cycle of the Defense Transportation System.

195. **Transportation Officer**. Person(s) designated or appointed to perform traffic management functions. The official at an activity that is designated or appointed as Installation Transportation Officer, Traffic Manager, Traffic Management Officer, Passenger Transportation Officer, Personal Property Transportation Officer, or Department of State General Service Officers.

196. **Transportation Operational Personal Property Standard System**. A standard Automated Information System designed to support the worldwide Personal Property Movement and Storage Program.

197. **Transshipment Point**. A point where the responsibility for an in-transit shipment is transferred from one mode or conveyance to another for further transportation to the consignee.

198. **Trip Leased**. A vehicle lease of 30 days or less in duration between a carrier/contractor and a leasing agent involving the power unit of a vehicle.

199. **Truck-Away Service**. A method of transporting vehicles, including other than self-propelled vehicles, whereby the vehicles are loaded into or upon carrier's equipment.

200. **Uniformed Services**. The Army, Navy, Air Force, Marine Corps, Coast Guard, National Oceanic and Atmospheric Administration, and Public Health Service.

201. **United States Armed Forces**. Used to denote collectively only the regular components of the Army, Navy, Air Force, Marine Corps, and Coast Guard.

202. **United States Transportation Command (USTRANSCOM)**. The unified command which is the Department of Defense (DOD) single manager for sea, land, and air transportation in both peace and war. USTRANSCOM controls all DOD transportation assets except those that are Service-unique or theater-assigned.

203. **Unstuffing**. Removal of cargo or household goods from a container.

204. **Water Clearance Authority**. An activity that controls and monitors the flow of cargo into ocean terminals. (See Ocean Cargo Clearance Authority)

205. **Water Port of Embarkation**. An authorized point of departure from a foreign country or the United States located at a water port.

ABBREVIATIONS AND ACRONYMS

ACA	Area Clearance Authority
ACO	Administrative Contracting Officer
AFI	Air Force Instruction
AFPD	Air Force Policy Directive
AMC	Air Mobility Command
AOR	Area of Responsibility
APOD	Aerial Port of Debarkation
APOE	Aerial Port of Embarkation
AR	Army Regulation
ASREQ	As Required
ASN	Advance Shipping Notice
ATCMD	Advanced Transportation Control and Movement Document
ATF	Alcohol, Tobacco, And Firearms (Bureau Of)
BATF	Bureau of Alcohol, Tobacco and Firearms
BL	Bill of Lading
BLOC	Bill of Lading Office Code
BOA	Basic Ordering Agreement
BOTO	Boat One Time Only
BRAC	Base Realignment and Closure
C2	Command and Control
C4S	Command, Control, Communication, Computer Systems
CAA	Certificate of Agency Agreement
CAA	Command Arrangement Agreements
CAP	Carrier Assessment Program
CBL	Commercial Bill of Lading
CBO	Consolidation Booking Office
CCP	Consolidation and Containerization Point
CD	Contractor Disassembled
CDR	Contract Discrepancy Report
CDRL	Contract Data Requirements List
CFR	United States Code of Federal Regulations
CIM	Corporate Information Management
CINC	Commander in Chief
CJCS	Chairman of the Joint Chiefs of Staff
CLIN	Contract Line Item Number
COCOM	Combatant Command
COMDTINST	Commandant Instruction
CONS	Consumable Items
CONUS	Continental United States
COR	Contracting Officer's Representative
CORE	Contingency Response
CP	Contractor Packed
CPPSO	Consolidated Personal Property Shipping Office

CRAF	Civil Reserve Air Fleet
CTO	Commercial Travel Office
CTUS	Customs Territory of the United States
CU	Cube
CW	Containerized Warehouse
CWT	Hundredweight
DAC	Day After Contract Start
DBO	Disassembled by Owner
DDD	Desired Delivery Date
DD FORM	Department of Defense Form
DFARS	Defense Federal Acquisition Regulation Supplement
DFAS	Defense Finance and Accounting Service
DFRIF	Defense Freight Railway Interchange Fleet
DISCON	Discrepancy In Shipment Confirmation
DISREP	Discrepancy In Shipment Report
DLA	Defense Logistics Agency
DLAM	Defense Logistics Agency Manual
DOD	Department of Defense
DODAAC	Department of Defense Activity Address Code
DODAAD	DOD Activity Address Directory
DOM	Domestic
DOT	Department of Transportation
DPM	Direct Procurement Method
DS	Destination
DSN	Defense Switched Network
DTOD	Defense Table of Official Distances
DTR	Defense Transportation Regulation
DTS	Defense Transportation System
DUSD/L	Deputy Under Secretary of Defense for Logistics
EAS	Each Shipment
EDI	Electronic Data Interchange
EPA	Environmental Protection Agency
ETA	Estimated Time of Arrival
ETR	Export Traffic Release
FAA	Federal Aviation Administration
FAR	Federal Acquisition Regulation
FAX	Facsimile
FOIA	Freedom of Information Act
GAO	Government Accounting Office
GBL	Government Bill of Lading
GCC	Government Constructive Cost
GCWT	Gross Hundredweight

GOC	Government-Owned Containers
GPMRC	Global Patient Movement Requirements Center
GSA	General Services Administration
GSO	General Service Officer
GTN	Global Transportation Network
HAZMAT	Hazardous Material
HHG	Household Goods
HN	Host Nation
HQ	Headquarters
IAW	In Accordance With
IBS	Integrated Booking System
IG	Inspector General
INTE	Intertheater
INTL	International
INTR	Intratheater
IRS	Internal Revenue Service
IRS	International Rate Solicitation
ITGBL	International Through Government Bill of Lading
ITV	In-Transit Visibility
IVR	Interactive Voice Recognition
JCS	Joint Chiefs of Staff
JFTR	Joint Federal Travel Regulations
JICTRANS	Joint Intelligence Center Transportation
JMCG	Joint Mobility Control Group
JOPES	Joint Operation Planning and Execution System
JPPSO	Joint Personal Property Shipping Office
JS	Joint Staff
JSPS	Joint Strategic Planning System
JTB	Joint Transportation Board
JTCC	Joint Transportation Corporate Information Management (CIM) Center
JTR	Joint Travel Regulations
LBS	Pounds
LOI	Letter of Intent
LOW	Letter of Warning
LTL	Less-Than-Truckload
MACOM/MAJCOM	Major Command
MARAD	Maritime Administration
MARS	Military Affiliate Radio System
MCC	Movement Control Center
MCO	Marine Corps Order
METLOC	Medical Location

MISC	Miscellaneous
MO	Mobility Officer
MOA	Memorandum of Agreement
MOT	Military Ocean Terminal
MOTO	Mobile Home One-Time-Only
MOU	Memorandum of Understanding
MRT	Military Rate Tender
MSC	Military Sealift Command
MSL	Military Shipping Label
MTHLY	Monthly
MTMC	Military Traffic Management Command
N/A	Not Applicable
NAF	Nonappropriated Funds
NAICS	North American Industry Classification System
NAVSUP	Navy Supply System Command
NCWT	Net Hundredweight
NDRF	National Defense Reserve Fleet
NHTSA	National Highway Traffic Safety Administration
NTS	Nontemporary Storage
OCONUS	Outside Continental United States
ONE/R	One Time With Revisions
OPCON	Operational Control
OPLOC	Operating Location
OSD	Office of the Secretary of Defense
OTO	One-Time-Only
PBP&E	Professional Books, Papers, And Equipment
PBO	Packed by Owner
PCS	Permanent Change of Station
PDS	Permanent Duty Station
PEC	Program Element Code
PL	Public Law
POA	Power of Attorney
POC	Point of Contact
POD	Port of Debarkation
POE	Port of Embarkation
POF	Privately Owned Firearms
POV	Privately Owned Vehicle
PPBS	Planning, Programming, and Budgeting System
PPCIG	Personal Property Consignment Instruction Guide (Volume I and II)
PPGBL	Personal Property Government Bill of Lading
PPM	Personally Procured Move
PPPO	Personal Property Processing Office
PPSO	Personal Property Shipping Office

PRO-GEAR	Professional Books, Papers, and Equipment
PRO	Professional Books, Papers, and Equipment
PUB	Publication
PWS	Performance Work Statement
QAE	Quality Assurance Evaluator
QTRLY	Quarterly
RDD	Required Delivery Date
RI	Registered Importer
RPDD	Required Port Delivery Date
RRF	Ready Reserve Force
RSMO	Regional Storage Management Office
SAV	Staff Assistance Visit
SCAC	Standard Carrier Alpha Code
SDS	Service Delivery Summary
SECDEF	Secretary of Defense
SECTRANS	Secretary of Transportation
SF	Standard Form
SFR	Single Factor Rate
SIT	Storage-In-Transit
SJA	Staff Judge Advocate
SOFA	Status of Forces Agreement
SOW	Statement of Work
SPOD	Seaport of Debarkation
SPOE	Seaport of Embarkation
SRP	Sealift Readiness Program
SSAN	Social Security Account Number
SSCO	Shipper Service Control Office
STATCO	Statistical Collection of Passenger Travel
TA	Transportation Agent
TALCE	Tanker Airlift Control Element
TAD	Temporary Additional Duty
TCC	Transportation Component Command
TCMD	Transportation Control and Movement Document
TCN	Transportation Control Number
TDR	Tonnage Distribution Record
TDY	Temporary Duty
TGBL	Through Government Bill of Lading
TIN	Taxpayer Identification Number
TMA	Transportation Management Advisory
TO	Transportation Officer
TOPS	Transportation Operational Personal Property Standard System
TOS	Tender of Service

TOSSS	Tender of Service Signature Sheet
TP	Transportation Priority
TP-4	Transportation Priority 4
TP NO	Transportation Priority Number
TQAP	Total Quality Assurance Program
TWCF	Transportation Working Capital Fund
UB	Unaccompanied Baggage
US	United States
U.S.C	United States Code
USCG	United States Coast Guard
USCS	United States Customs Service
USCINCTRANS	Commander in Chief, US Transportation Command
USEUCOM	United States European Command
USMC	United States Marine Corps
USTRANSCOM	United States Transportation Command
VISA	Voluntary Intermodal Sealift Agreement
VPC	Vehicle Processing Center
WKLY	Weekly
WPOD	Water Port of Debarkation
WPOE	Water Port of Embarkation

WEB SITES

Air Force Publications:
http://afpubs.hq.af.mil/

Army Claims:
http://www.jagcnet.army.mil/claims (select "pers claims"from main menu)

Army Publications:
http://www.usapa.army.mil/

Code 3 Ocean Compensation Factors:
https://www.mtmc.army.mil, then select Personal Property, International, Rate Solicitation, and Code 3 Ocean Compensation Factors.

Defense Table of Official Distances:
http://dtod-mtmc.belvoir.army.mil/

Defense Transportation Regulation, Part V, Customs:
https://business.transcom.mil/, then click on DOD Customs Programs, and DOD Customs and Border Clearance Regulation V.

Department Of Defense (DOD) Publications:
http://www.defenselink.mil/pubs/

Domestic or International Rates:
https://www.mtmc.army.mil, then click on ETA Systems, Personal Property, Domestic/International Rates.

DPM Commercial Air Rates:
https://www.mtmc.army.mil, then select Personal Property, International, and DPM Commercial Air.

Government Publications:
http://www.dodssp.daps.mil

Importing POVs:
http://www.nhtsa.gov/cars/rules/import
http://www.customs.ustreas.gov/top/sitemap.htm, then click on Know Before You Go, Know Before You Go Brochure, Importing a Car, Automobiles Informal Entries (under US $2,000) Importing Goods for Personal Use.
https://www.mtmc.army.mil, then click on Personal Property, Vehicle (POV), and Shipping Your POV.

Joint Federal Travel Regulations (JFTR) - Uniformed Service Personnel:
http://www.dtic.mil/perdiem/jftr.html

Joint Travel Regulations (JTR) - Department Of Defense (DOD) Civilian Personnel:
http://www.dtic.mil/perdiem/jtr.html

Marine Corps Transportation Account Codes:
http://www.hqmc.usmc.mil/lftweb.nsf, then click on Other Documents and MCBul 4610.

Marine Publications:
http://www.usmc.mil/directiv.nsf/

Mobile Home/Boat Rate Solicitation:
https://www.mtmc.army.mil, then select Personal Property, Domestic, and Mobile Home/Boat Solicitation.

Moving Your Mobile Home:
http://www.belvoir.army.mil/jppsowa/HomeCore.htm, click on JPPSOWAFAQ's and Moving Your Mobile Home

MTMC - Electronic Transportation Acquisitions:
https://eta.mtmc.army.mil/

MTMC Pamphlet "Shipping Your POV":
http://www.mtmc.army.mil, then click on Personal Property, Vehicles (POV), and Shipping Your POV.

MTMC Personal Property Homepage:
http://www.mtmc.army.mil/property/default.htm

National Highway Traffic Safety Administration - Vehicle Importation Regulations:
http://www.nhtsa.dot.gov/cars/rules/import

Navy Publications:
http://www.navsup.navy.mil/

Per Diem, Travel and Transportation Allowance Committee:
http://www.dtic.mil/perdiem/

Personal Property Consignment Instruction Guide:
http://pweb.eta.mtmc.army.mil/ppcig/index.htm

SIT Facilities:
http://pweb.eta.mtmc.army.mil/ppcig/index.htm

Transportation Account Codes (TAC):
https://www.DAAS.dla.mil/tac_inq/tac_menu.html

United States Customs:
http://www.customs.ustreas.gov/travel/auto.htm

United States Customs Office:
http://www.customs.treas.gov

United States Postal Service Domestic/International Mail Manual:
http://www.usps.com

United States Transportation Command - Defense Transportation Regulation (DTR):
http://public.transcom.mil/J4/j4lt/dtr.html

US Government Department of Defense Airlift Rates and US Government Non-Department of Defense Rate Tariffs: http://public.scott.af.mil.hqamc/fm/rates.htm

Vehicle Processing Centers:
http://www.whereismypov.com/

CHAPTER 401

GENERAL PROVISIONS

A. PURPOSE

This Regulation prescribes policies and procedures and assigns responsibilities for performing traffic management functions initiated or sponsored by Department of Defense/United States Coast Guard (DOD/USCG) members/employees and non-appropriated fund (NAF) employees for the movement and storage of personal property and mobile homes.

B. POLICY

1. The United States Transportation Command (USTRANSCOM), in conjunction with the Services/Agencies and theater commands, will provide technical direction and supervision over all traffic management functions incident to personal property movements within the Defense Transportation System (DTS). Quality service to the member/employee is given primary emphasis in implementation and management of the personal property program.

2. The Transportation Officer (TO) will determine the best service in support of the personal property program.

3. Military air and ocean transportation resources, under the control of the Air Mobility Command (AMC) or the Military Sealift Command (MSC), will be used to the maximum extent.

4. The movement of household goods (HHG) by air is subject to the following considerations:

a. Personal property must be airlifted by AMC or commercial air carriers to and from those hard-lift areas designated by DOD Components.

b. Personal property shipments may be accomplished/made via AMC where Transportation Priority 4 (TP-4) tariff rates are available in other than hard-lift areas.

c. Commercial airlift, acquired directly or as part of an International Through Government Bill of Lading (ITGBL) shipment, may be used when cost effective or if both surface and AMC transportation between other than hard-lift areas do not satisfy the member's/employee's shipment requirements.

5. Transportation shipment and cost data will be captured in the Transportation Operational Personal Property Standard System (TOPS) and reported to USTRANSCOM annually on a fiscal year basis. Shipment and cost data will be reported for Through Government Bill of Lading (TGBL) moves, nontemporary storage (NTS), local drayage, direct procurement method (DPM) contractual services/linehaul, intratheater movements, and personally procured transportation payments. When shipments are transported via military airlift and sealift, such shipment and cost data will be included as well. Reports are due annually on 31 March. Shipment and cost

data will in turn be provided by USTRANSCOM to the Services/Agencies and the Assistant Deputy Under Secretary of Defense for Transportation Policy.

6. Change notification to all rate solicitations will be coordinated with the DOD Components when they affect operations, policy, procedures, and/or affect cost of the program.

C. INDIVIDUAL MISSIONS, ROLES, AND RESPONSIBILITIES

1. The Office of the Deputy Under Secretary of Defense for Logistics (DUSD/L) must:

a. Establish transportation and traffic management policy and oversee implementation of policy for effective and efficient use of DOD and commercial transportation resources.

b. Chair the DOD Transportation Policy Council, which provides a forum for coordinated review of DOD transportation policies, systems, and programs.

2. The Service Secretaries must:

a. Assign their transportation commands (Military Traffic Management Command (MTMC) of the Department of the Army, MSC of the Department of the Navy, and AMC of the Department of the Air Force) in times of peace and war to the Commander in Chief United States Transportation Command (USCINCTRANS) as Transportation Component Commands (TCCs) under USCINCTRANS' Combatant Command (COCOM).

b. Assign common-user transportation assets of the military departments to USCINCTRANS' COCOM, except for those Service-unique or theater-assigned transportation assets.

c. Program, budget, organize, train, and equip forces for assignment to USCINCTRANS.

d. Resource and manage their transportation programs, which include base transportation operations, and issue supplemental policy, procedures, and traffic management guidance in support of those operations.

e. Administer and contract for commercial travel office (CTO) services under DOD Instruction 4500.42, DOD Transportation Reservation and Ticketing Services.

3. The Chairman of the Joint Chiefs of Staff (CJCS) must:

a. Staff and submit to the Secretary of Defense (SECDEF), through the Under Secretary of Defense for Acquisition, USCINCTRANS, and other officials, for approval:

(1) Changes to procedures for submission of transportation movement requirements to USCINCTRANS.

(2) Changes to the transportation movement priority system to ensure its responsiveness to the commanders requiring transportation services.

b. Recommend forces for assignment to USCINCTRANS to the SECDEF for approval, in accordance with (IAW) 10 United States Code (U.S.C.), § 162, Combatant Commands: Assigned Forces; Chain of Command.

4. The Service or Agency Headquarters (HQ) transportation staffs must:

a. Provide technical direction, management, and evaluation of the cargo traffic management aspects of the DOD transportation movement program, subject to the overall guidance, policies, and programs established by their Service or Agency and USCINCTRANS.

b. Ensure efficient, responsive, and quality transportation services and compliance with governing laws, directives, and regulations.

c. Direct development and implementation of DOD, Service, or Agency transportation policies, procedures, and programs.

5. The USCINCTRANS must:

a. Exercise COCOM of MTMC, MSC, and AMC in times of peace and war.

b. Exercise COCOM of all assigned transportation assets of the military departments except for Service-unique or theater-assigned transportation assets (i.e., C-130 aircraft, port handling equipment, and other transportation assets).

c. Provide management support for Service-unique or theater-assigned transportation assets when agreed to by USCINCTRANS and a Service Secretary or a commander of a unified command, or when so directed by the SECDEF.

d. Submit to the SECDEF, through the CJCS, the Under Secretary of Defense for Acquisition, and such other officials, for approval any changes to transportation, fiscal, procurement, or other DOD policies to implement this Regulation.

e. Establish and maintain relationships between the DOD and the commercial transportation industry to develop concepts, requirements, and procedures for the Contingency Response (CORE) Program, the Civil Reserve Air Fleet (CRAF), and the Voluntary Intermodal Sealift Agreement (VISA). Any procedure so developed will take effect upon approval by the SECDEF.

f. Ensure that transportation policy, procedures, and data requirements are fully integrated with overall DOD logistics interfaces.

g. Provide air, land, and sea transportation in peace and war as the DOD single manager for transportation other than Service-unique or theater-assigned transportation assets. USCINCTRANS must align traffic management and transportation single manager responsibilities to achieve optimum responsiveness, effectiveness, and economy in times of peace and war and must perform such additional functions as outlined below:

(1) Exercise COCOM of all assigned forces, to include organizing and employing forces to carry out assigned missions and providing forces in support of other unified commands. USCINCTRANS must exercise COCOM through the TCCs. USCINCTRANS must direct AMC, MSC, and MTMC to perform missions and related responsibilities as noted in Paragraphs C.8, C.9, C.10, and C.11 of this Chapter or as may be necessary to carry out USCINCTRANS-assigned missions.

(2) Apply apportioned/allocated strategic mobility resources as directed by the SECDEF.

(3) Prescribe procedures for the submission of transportation requirements by the DOD Components to USCINCTRANS.

(4) Provide management support for Service-unique or theater-assigned transportation assets, to include pre-positioned ships, to the secretaries of the military departments and the commanders of unified commands at the direction of the SECDEF, or upon request of the Service Secretary or CINC concerned.

(5) Develop, prioritize, and make recommendations through the Joint Chiefs of Staff (JCS) to the secretaries of the military departments and the Under Secretary of Defense for Acquisition on the capability, capacity, characteristics, design, and other requirements for mobility assets needed to execute DOD common-user transportation and strategic mobility objectives. Identify and support programming requirements, along with capital investment strategies, via the Planning, Programming, and Budgeting System (PPBS).

(6) Establish and maintain relationships between the DOD and the commercial transportation industry (in coordination with the Department of Transportation (DOT), Federal Aviation Administration (FAA), and the National Transportation Safety Board) to promote the seamless transition from peace to war and improve interfaces between the DOD and industry.

(7) Manage the Transportation Working Capital Fund (TWCF) financial operations, to include programming, budgeting, accounting, and reporting. Provide guidance for standardization of rates, regulations, and operational policies and procedures.

(8) Develop and implement, in coordination with the military departments, TWCF manpower management policy to maintain USCINCTRANS' visibility and adequate control of common-user transportation manpower and personnel assets. Establish procedures to program, account for, and document TWCF military and civilian manpower and personnel. Assess the functional impact of proposed manpower increments and decrements to the common-user transportation functions and recommend changes through the CJCS IAW DOD Directive 5158.4 United States Transportation Command.

(9) Control assigned funds made available from the National Defense Reserve Fleet (NDRF) for operations, maintenance, and lease of national defense sealift vessels operated under the TWCF.

(10) Review and analyze Service-proposed organizational and mission changes within the TCCs that impact on the ability of USCINCTRANS to carry out assigned responsibilities.

(11) Ensure the effective and efficient use and control of United States (US) Government-owned or commercial strategic mobility resources and capabilities available to the DOD.

(12) Through the TCCs, coordinate and implement transportation and acquisition policy and ensure peacetime and wartime procedural compatibility. Assume financial responsibility through the management of the TWCF account and participate in the acquisition planning, monitoring, and overseeing of TCC procurement execution, as outlined in USTRANSCOM Regulation 110-5, United States Transportation Command (USTRANSCOM) Acquisition Oversight Group (AOG). Develop acquisition strategies for execution by the TCCs to accomplish USCINCTRANS missions. Excluded from these procedures are responsibilities specifically reserved to the Head of the Contracting Activity.

(13) In support of the Service heads of an Agency, take action to facilitate the resolution of USCINCTRANS-unique requirements related to the procurement of transportation services.

(14) Coordinate the forecasting and execution of validated transportation requirements on behalf of the DOD in both peace and war, to include channel approval. Advise the Joint Staff (JS) and other DOD Components when there is insufficient capability to meet requirements and make recommendations for actions to alleviate the shortfall.

(15) Disseminate the necessary information to the DOD and Service authorities to facilitate the smooth flow of programming requirements, transportation movement requirements, and other pertinent information to ensure effective transportation operations within the DOD.

(16) With the approval of the SECDEF and IAW the memoranda of understanding (MOU) with DOT, augment the strategic mobility capability by activating strategic reserve or mobilization programs, such as CRAF, Ready Reserve Force (RRF), VISA, and the CORE program. Develop policies, requirements, concepts, and procedures and provide direction and oversight for the CORE Program, CRAF, RRF, VISA, and other established mobilization programs as assigned.

(a) Upon approval of the SECDEF and in coordination with the Secretary of Transportation (SECTRANS), USCINCTRANS will activate the RRF to meet operations/contingencies/CJCS exercises or, as prudent, take advance action to coordinate and plan with the Maritime Administration (MARAD) the possible RRF activation in anticipation of actual requirements. When military operations require civil shipping support, advise MARAD that activation of the VISA is under consideration and request that MARAD prepare an economic impact statement. Forward a recommendation to SECDEF and transmit, for signature, a proposed memorandum to the SECTRANS requesting concurrence in the activation of the VISA. Upon approval of VISA activation, direct MSC to arrange with ship operators for the acquisition of particular ships.

(b) Activate, with concurrence of the SECDEF, any CRAF stage or segment to fulfill commercial air augmentation of DOD's airlift fleet.

(c) Recommend, through the SECDEF, in coordination with the SECTRANS, the necessary Presidential action to enable requisitioning of ships IAW 46 U.S.C. § 1242, Shipping, and 50 U.S.C. § 196, Emergency Foreign Vessel Acquisition; Purchase or Requisition of Vessels Lying Idle in United States Waters.

(17) Serve as the principal DOD focal point with MARAD on RRF issues, to include fleet composition, activation, maintenance, and readiness standards IAW MOU and/or memorandums of agreement (MOA).

(18) Monitor and evaluate Service readiness programs for active and reserve component units that support USCINCTRANS missions.

(19) Coordinate with the unified commands for the protection of USCINCTRANS assets, host nation (HN) transportation, negotiate/review international support agreements, and other related support to USCINCTRANS forces.

(20) Within mission responsibilities, maintain oversight of those dockets, proposals, and notices of federal, judicial, state, municipal, or other US Government agencies, and commercial entities on rates and services that may affect military transportation and traffic management needs and authorities. Alone or through the components, represent the DOD, or coordinate with DOD or other US Government agencies on legislative, legal, or regulatory issues to protect or promote DOD transportation interests IAW DOD Instruction 4500.17, Proceedings Before Transportation Regulatory Bodies.

(21) Negotiate and consummate support agreements, assignments, and delegations of functions and authority, as required IAW DOD Instruction 4000.19, Interservice and IntraGovernmental Support, and act as the point of contact (POC) for operational agreements within the DTS.

(22) Nominate the chairperson of the Transportation Committee of the Defense Acquisition Regulatory Council. The Transportation Committee chairperson manages the formulation and evaluation of proposed transportation acquisition policy for inclusion in acquisition regulations.

(23) Conduct deliberate and execution transportation planning for DOD Components IAW the Joint Strategic Planning System (JSPS) and the Joint Operation Planning and Execution System (JOPES).

(24) Coordinate and provide worldwide JOPES training in conjunction with service schools.

(25) Act as facilitator for all meteorological and oceanographic data used in deliberate and execution planning conducted IAW the JSPS and JOPES.

(26) Integrate, in coordination with the DOD Components and the transportation industry, the DOD transportation-related command, control, communications, and computer systems (C4S) by maintaining the Global Transportation Network (GTN). USTRANSCOM will coordinate and provide worldwide GTN training.

(27) Promote the development, production, and fielding of transportation and C4S that enhance the effectiveness of the DTS and establish a C4S requirements baseline and validate emerging C4S requirements to ensure integration and efficiency of developing systems with existing systems.

(28) Act as the DOD administrator for all transportation data to ensure the automated systems supporting the DTS are compatible and/or interoperable in support of Corporate Information Management (CIM) goals and objectives. Establish and coordinate transportation data standards and protocols and provide transportation data for the logistics portion of the Defense Data Repository System.

(29) Serve as the program manager for Defense Transportation Electronic Data Interchange (EDI).

(30) Serve as DOD single manager for intertheater medical regulating. Conduct continental United States (CONUS) medical regulating by exercising authority, direction, and control over the Global Patient Movement Requirements Center (GPMRC). Provide the systems, policies, and procedures to regulate patients into other theaters from combat theaters. Maintain, train, and deploy medical regulating teams (Category A reservists).

(31) Serve as the principal focal point to develop, coordinate, and execute a DOD strategy for production of transportation intelligence to satisfy strategic mobility requirements; develop DOD standards for transportation intelligence products; and coordinate the transportation intelligence production efforts of other organizations under the Distributed Production Program. Produce transportation intelligence in support of USTRANSCOM and component mission planning and execution.

(32) Propose DOD intermodal system policies for SECDEF approval and prescribe procedures for implementation. Advocate DOD intermodal system programs that will optimize strategic mobility.

(33) Provide direction and oversight for the Joint Logistics Over-the-Shore Program.

(34) Act as lead agent for transportation publications, as assigned by the CJCS or SECDEF.

(35) Operate the Joint Transportation CIM Center (JTCC) to improve the efficiency and effectiveness of the DTS through the application of functional process improvement and the central direction of transportation-related information systems development and migration.

(36) Serve as the DOD advocate to incorporate effective transportation engineering techniques and characteristics into DOD transportation processes, equipment, and facilities.

(37) In coordination with other agencies, provide direction and oversight for all matters dealing with the transportation of hazardous material (HAZMAT).

(38) Provide direction and oversight of commercial passenger airlift and other quality control programs affecting transportation operations.

(39) Perform continuing analysis of the DTS to improve the quality of service to the customer. Change procedures to enhance customer service and make recommendations to the JS and SECDEF for policy changes.

(40) Designate, in consultation with the Services, CONUS Seaports of Embarkation (SPOEs), Aerial Ports of Embarkation (APOEs), Seaports of Debarkation (SPODs), and Aerial Ports of Debarkation (APODs) for deploying/redeploying forces and sustainment during planning and execution. Make recommendations to the theater commanders for designation of Outside Continental United States (OCONUS) SPODs/APODs and/or embarkation for redeploying and/or deploying forces and sustainment during planning and execution.

(41) Establish Command Arrangement Agreements (CAAs) with the unified commands and enter into a MOA/MOU with other Agencies to execute USCINCTRANS missions.

(42) Provide operational reports as required by DOD Instruction 4100.31, Reports on Single Manager Operations.

(43) Communicate and coordinate directly with all DOD Components and with other departments and agencies of Government in matters relating to USCINCTRANS missions.

(44) Serve as the DOD focal point for all international cooperative airlift agreements.

(45) Furnish, through the CJCS, for SECDEF approval, changes to DOD transportation policy.

(46) Perform approval authority functions by coordinating all Defense Transportation Regulation (DTR) changes with the Services and the Defense Logistics Agency (DLA).

(47) Perform other missions, as directed by the SECDEF.

6. The Joint Mobility Control Group (JMCG).

a. The JMCG consists of the Mobility Control Center (MCC), GPMRC, Joint Intelligence Center Transportation (JICTRANS), and the TCCs command and control (C2) centers.

b. The JMCG is a key end-state objective of the USTRANSCOM Strategic Plan. The JMCG exemplifies the concept of centralized control and decentralized execution of DTS movement requirements and is the focal point to orchestrate and optimize DTS operations in support of the Unified Commanders and other customers. The JMCG improves DTS efficiency and effectiveness through maintaining better visibility of transportation assets and requirements, providing alternative recommendations on transportation options, eliminating redundant functions, improving operations modeling and feasibility estimation, and improving coordination between USTRANSCOM C2 nodes. It provides for an operational environment where execution functions remain at the TCCs. The JMCG overarching responsibilities include:

(1) Enacting USTRANSCOM's responsibility as the single manager of the DTS.

(2) Bringing US transportation resources to bear against any movement task.

(3) Providing visibility of all movement requirements.

(4) Providing C2 of global mobility forces and other assets.

7. The MCC. USTRANSCOM's MCC is the single location for managing all movement requirements. The MCC is comprised of requirements and customer service teams and includes a meteorological and oceanographic cell (METOC), a medical cell, and an intelligence representative. The MCC serves as the single face to the customer on all requirements moving within the DTS. The MCC also performs:

a. Transportation feasibility analyses.

b. Deployment estimates.

c. Cost estimates.

d. Requirements confirmation.

e. Shortfall identification.

f. Mode selection.

g. Requirements consolidation recommendations.

8. TCCs (AMC, MTMC, and MSC) must:

a. Take all required actions within law, executive order, and regulations to support USCINCTRANS in executing their missions.

b. Ensure the effective and efficient use of USTRANSCOM-controlled and commercial transportation services for the DOD.

c. Prepare recommendations for USCINCTRANS on the design, specifications, and equipping of strategic mobility assets. In collaboration with Government Agencies, study, analyze, and recommend improvements in strategic mobility systems.

d. Develop, establish, and operate data systems, within the technical and functional parameters and standards established by USCINCTRANS and IAW DUSD/L, to integrate DOD transportation information worldwide and provide data for the DOD Components.

e. Manage TWCF activities, incur obligations and costs to perform the activity mission, prepare and submit TWCF required transportation financial reports to USCINCTRANS/Office of the Secretary of Defense (OSD), and identify to USCINCTRANS any impediments to achievement of performance cost goals.

f. Submit to USCINCTRANS for coordination and analysis any proposed major organizational or manpower changes affecting TWCF functions that would result in activity closure or reduction-in-force of civilian personnel.

g. Identify the split between common-user transportation and Service-unique manpower assets in coordination with USTRANSCOM and the military departments. Identify common-user (TWCF funded) manpower and assigned personnel with discrete Program Element Code (PEC) or other agreed upon coding established and controlled through USTRANSCOM. Plan, program, budget, account for, and maintain manpower authorization documents for TWCF funded manpower. Coordinate all TWCF funded manpower adjustments with USCINCTRANS. Notify USTRANSCOM of any Service-levied manpower or personnel ceilings, constraints, or restrictions impacting TWCF assets.

h. Submit acquisition packages for procurement of USTRANSCOM-related transportation services and equipment to USTRANSCOM for review and coordination, as directed in USTRANSCOM Regulation 110-5.

i. Develop and submit TWCF program and budget submissions and associated reports to USCINCTRANS IAW established procedures.

j. Notify USCINCTRANS, IAW established procedures, of the receipt or initiation of any claim by or against a contractor in excess of $1 million.

k. Submit to USCINCTRANS, for forwarding to higher HQ, all prepared statements and supporting material for congressional hearings and proposed legislative packages. Submit to USCINCTRANS copies of responses to congressional inquiries relating to common-user DTS initiatives.

l. Submit to USCINCTRANS, for forwarding to higher HQ, all prepared responses to audit reports relating to common-user, DTS issues. Report to USCINCTRANS all DTS-related internal control weaknesses identified under DOD Directive 5010.38, Management Control (MC) Program.

m. Recommend to USCINCTRANS policies and programs on the effective acquisition of freight and passenger transportation services from all modes of transportation within CONUS and OCONUS.

n. Review and analyze such proposals, notices, decisions, regulations, laws, of federal, state, and local agencies, courts, legislatures, and commercial entities that affect USCINCTRANS' mission.

o. Provide program and budget submissions to the military departments for strategic mobility requirements IAW established procedures. Keep USCINCTRANS informed of the status of these requirements while Service programs are under development and after completion of their Program Objective Memoranda.

p. Review, analyze, and submit recommendations to USCINCTRANS on Consolidation and Containerization Points (CCPs).

q. Perform strategic deployment analysis of transportation systems. Analyze constraints and capabilities of DTS modes and subsystems that support strategic mobility. Coordinate with other DOD Components on installation outload capability and enhancement programs.

r. In coordination with USTRANSCOM, develop MOA and MOU and other similar documents necessary to formalize commitments of transportation services within the limits of the policies prescribed by this Regulation. Examine all such documents to bring them in compliance with this Regulation and submit them to USCINCTRANS for approval prior to final signature.

s. Provide deliberate and execution-planning support to USTRANSCOM to ensure effective and efficient use and control of transportation assets and services.

t. Provide USCINCTRANS with copies of internal regulations concerning the acquisition of transportation services. Coordinate with USCINCTRANS all changes, revisions, and new internal regulations that would either require subsequent action from USCINCTRANS or that would supplement specific USCINCTRANS guidance previously received.

u. Provide recommendations for and information pertaining to diversions of cargo, personal property, and passengers within the DTS. Diversions must be made only with concurrence of the affected shipper, Service, Agency, or CINC.

v. When designated, develop and publish transportation publications as assigned by USCINCTRANS.

w. Serve as the USTRANSCOM POC for the establishment, amendment, or clarification of rules and regulations of the regulatory bodies governing safe and secure transportation of explosives and other HAZMAT.

x. Inform USCINCTRANS of Service-assigned missions.

y. Perform other mission tasks as directed by USCINCTRANS.

z. Procure commercial transportation services, to include data reporting requirements.

9. The Commander AMC must:

a. Act as single manager, on behalf of USTRANSCOM, for airlift, intertheater, intratheater, and CONUS aeromedical evacuation, aerial refueling support, and support services to the DOD Components as required by USCINCTRANS.

b. Be responsible for all airlift procurement and negotiation and serve as the single face to industry for airlift matters.

c. Recommend the size of passenger groups and the size of release unit cargo, in conjunction with USTRANSCOM and affected DOD Components.

d. Prepare short-range and long-range forecasts of strategic air transportation requirements and match them with capabilities of DOD, based on an evaluation of requirements.

e. Procure all commercial air mobility services. Administer and negotiate the Airline City Pairs Contract in conjunction with the General Services Administration (GSA) and in coordination with DOD components.

f. Administer and execute the CRAF program. Recommend to USCINCTRANS the activation of CRAF, to include required stage(s) and/or segment(s) to meet airlift/aeromedical requirements. Prepare documentation to activate the CRAF and 49 U.S.C. Chapter 443, Insurance. Obtain Secretary of the Air Force Indemnification Program activation and waivers. Monitor and manage AMC-assigned missions of these forces upon activation.

g. Perform capability inspections (semi-annually) necessary to certify air carriers for the safe movement of DOD cargo and passengers. Interface with other Federal Agencies to determine civil air carrier eligibility and suitability to provide service.

h. Operate a worldwide passenger reservation system for international travel aboard AMC transport aircraft and commercial contract airlift.

i. Provide USCINCTRANS information on the availability of AMC organic and controlled commercial strategic air mobility capability.

j. Through USTRANSCOM, serve as DOD focal point for international cooperative airlift agreements.

k. Provide host support for USTRANSCOM, including contracting and personnel support.

l. Operate, or arrange for operation of, common-user aerial ports/air terminals within CONUS or OCONUS based on agreements with the theater commanders, to include contracting for terminal services.

m. Act as the sole negotiator within CONUS with commercial firms on rates and other matters incidental to air transportation of freight.

n. Provide USCINCTRANS information on the availability of AMC-owned and AMC-controlled commercial air mobility capability.

o. Act as single POC with commercial airline industry for USTRANSCOM for procurement of DOD domestic and international airlift services.

p. Perform contract air administration duties and implement a quality assurance evaluation program for contract commercial airlift services.

q. Determine and arrange the best means available for obtaining supplemental surface transportation (i.e., bus service incidental to commercial air movement).

10. The Commander MTMC must:

a. Provide surface and surface intermodal traffic-management services, common-user ocean terminal support, and transportation engineering support to the DOD Components as directed by USCINCTRANS. Provide surface rates, routing, and carrier performance quality control.

b. Negotiate rates and other matters incidental to surface transportation of freight within CONUS and, as directed by USTRANSCOM, intermodal rates.

c. Negotiate and administer the DOD Personal Property Shipment and Storage Program, as directed by the USTRANSCOM, administer the DOD Privately-Owned Vehicle Import Control Program, and act as the sole negotiator, worldwide, with commercial firms on rates and other matters incidental to storage services for all personal property.

d. Operate, or arrange for operation of, common-user ocean terminals within CONUS or OCONUS based on agreements with the theater commanders, to include contracting for terminal services.

e. Manage the Defense Freight Railway Interchange Fleet (DFRIF), which is required to supplement the capability of commercial transportation carriers.

f. Administer the US Government car/truck rental program.

g. Administer the surface commercial carrier quality assurance program.

h. Administer the DOD Worldwide Cargo Loss and Damage Reporting Analysis System.

i. Provide ocean cargo booking for the DOD Components.

j. Arrange for movement of DOD-sponsored surface export cargo and act as the ocean cargo clearance authority IAW this Regulation.

k. Serve as the USTRANSCOM agent for highways, pipelines, ports, and railroads for national defense and administer other modal national defense programs as directed by the SECDEF.

l. Provide operational management of defense intermodal common-user containers and establish a worldwide DOD surface container management and control system.

m. Administer and execute the CORE Program. Recommend to USCINCTRANS the activation of the CORE Program.

n. Provide USCINCTRANS with information on the availability of MTMC-controlled commercial mobility capability.

o. Prepare forecasts of ocean and maritime common-user transportation services based on the requirements of the DOD Components.

p. Consolidate peacetime shipper service and unified commands surface transportation requirements and provide these to MSC. During contingency or wartime, assist USCINCTRANS with the clarification and consolidation of surface requirements from supported unified commanders.

q. Operate a MTMC Operations Center with the mission to serve as the single USTRANSCOM focal point for the execution of surface intermodal movements within the DTS and with the following responsibilities:

(1) Procure and book surface intermodal movement requirements.

(2) Maintain intermodal shipping schedules and the Integrated Booking System (IBS).

(3) Provide the Defense Finance and Accounting Service (DFAS) with supporting documentation to generate customer bills.

(4) Manage related support systems.

(5) Negotiate ocean rates and, as directed by USTRANSCOM, intermodal rates and related services to meet DOD ocean and intermodal transportation requirements. Perform Administrative Contracting Office (ACO) and Contracting Officer's Representative (COR) duties.

r. Upon request of AMC, provide data residing in Statistical Collection of Passenger Travel (STATCO) for use in the GSA Airline City Pairs Contract.

s. Be responsible for all surface passenger procurement negotiations and serve as the single face to the surface passenger carrier industry.

t. Administer the DOD Military Bus Agreement.

u. Administer the DOD Military Rail Agreement.

v. Schedule a personal property staff assistance visit (SAV) for each personal property shipping office (PPSO) within their geographical area of responsibility (AOR) once every two years, with priority given to high volume shipping activities. Supported Personal Property Processing Offices (PPPO) should be included in the SAV. The purpose of the SAV is to assist the PPSO in executing personal property traffic management program initiatives, and evaluate program effectiveness. Visits must be concurred by and coordinated with the military Service/Agency HQ or major command to avoid duplication of effort. A Government Accounting Office or DOD Inspector General audit conducted within the two-year period may be substituted for the SAV.

(1) SAV dates will be coordinated with the PPSO at least 45 days in advance, followed up in writing with information copies to the Service/Agency HQ or major command.

(2) The SAV representative will prepare a report of visit within 30 days following completion of the SAV addressed to the PPSO/PPPO visited, with information copy to the Service/Agency HQ or major command.

11. The Commander MSC must:

a. Provide ocean transportation, including ocean movement and support services, to the DOD Components as directed by USCINCTRANS.

b. Provide USCINCTRANS and MTMC with information on the availability and status of ships in the Government-owned and MSC-controlled fleet, including chartered commercial ships.

c. Charter vessels.

d. Oversee the RRF in concert with MARAD, oversee ships requisitioned, and exercise operational control over those mobilization forces on behalf of USCINCTRANS.

e. Recommend to USCINCTRANS activation of the RRF, requisitioning of US-owned ships, or the acquisition or activation of foreign ships or other established mobilization programs IAW 50 U.S.C. § 196, and DOD Regulation 4140.1, Materiel Management Policy.

(1) When activation is under consideration, MSC, based upon information provided by the JCS/CINCs through USCINCTRANS, must inform MARAD of actual or projected requirements for RRF ships or requisitioning. When directed by USCINCTRANS, MSC must request that MARAD activate required RRF ships. Operational Control (OPCON) of ships must be transferred from MARAD to MSC at activation.

(2) RRF activation, IAW law, is authorized under the following criteria:

(a) To meet a need for sealift capacity that can only be satisfied by a ship in the RRF, subject to conditions contained in the DOD and DOT MOA.

(b) To support deployment, sustainment, redeployment, and other transportation requirements of US armed forces in military contingencies.

(c) In support of CJCS exercises.

(d) For civil contingency operations upon orders from the SECDEF.

(e) Testing for readiness and suitability for mission performance.

(f) In connection with a transfer.

(3) Ships activated IAW the above will not be in competition with, substitute for, or displace privately owned US flag vessels.

(4) MSC, in conjunction with USTRANSCOM, must determine the RRF ship(s) to be used to support the customer's lift requirements based upon availability, suitability, cost, and

other factors. Ship activation dates must be a part of the selection process used to ensure different ships are activated. MSC must coordinate with MARAD for the activation of requested ship(s).

(5) The requirement to activate RRF shipping to test for readiness and operational performance must be considered in the determination of ship activation for use in a contingency deployment or an exercise. Periodic activation is required to ensure ships are able to meet their breakout schedules and to enhance the readiness of the RRF. MSC must coordinate with MARAD to preclude the activation of the same vessel repeatedly and to ensure the RRF Activation Plan is followed.

(6) When activating ships, USTRANSCOM and MSC must determine the type of ship best suited to complete a mission by utilizing factors discussed in Paragraphs C.11.e.(2)(b) through C.11.e.(2)(e) above and known funding constraints. When activating RRF ships, MSC will use the RRF Activation Plan and lift requirements to decide which ship(s) must be nominated to support an operation, mission, or exercise.

(7) Upon Presidential approval of authority to requisition ships, and when directed by USCINCTRANS, MSC must request that MARAD requisition specific ships, which must be transferred from MARAD to MSC after they are requisitioned.

(8) MSC must notify ship owners which of their vessels are being considered for call up. When directed by USCINCTRANS, MSC must notify ship owners which of their vessels are being considered for requisitioning and arrange for acquisition of particular ships with ship operators while keeping MARAD informed.

f. Act as the USTRANSCOM scheduling authority for ocean transportation (sealift) ships to support DOD requirements.

g. Study, analyze, and recommend requirements for ocean transportation systems.

h. Approve stowage plans and their implementation to ensure seaworthiness of the ship, safety of the cargo, and efficient use of ship space.

i. Billet and exercise control of all passengers aboard MSC ships. Administrative control may be exercised by the Services concerned. Assignment of supercargo personnel must be managed by MSC in coordination with MTMC.

j. Coordinate MSC operations with port authorities.

k. Promote the requirements, development, protection, and fielding of C4S to support in-transit visibility (ITV) for ocean transportation.

12. The Area, Activity, or Installation Commander (or their delegated representative(s)) must appoint a military member or civilian employee (not a contractor) as TO to execute DOD traffic management policy and procedures to obtain transportation services. The appointed TO must be a fully trained and equipped member of the activity or installation commander's technical staff.

Appointment must be accomplished by special order of the area, activity, or installation commander IAW regulations of the military departments concerned.

13. The TO must:

a. Provide efficient, responsive, and quality transportation services within the assigned geographic AOR and ensure compliance with governing laws, directives, and regulations.

b. Provide technical direction, management, and evaluation of the traffic management aspects of the DOD transportation movement program on a worldwide basis, subject to the overall guidance, policies, and programs established by USTRANSCOM and DOD Components.

(1) Prepare and edit travel and shipment documentation to ensure quality data and timely submission to support total movement business processes IAW DUSD/L timeliness criteria.

(2) Support contingency, mobility, natural disaster, and humanitarian relief requirements.

c. Act as a COR, alternate COR, or ordering officer when commercial travel offices and other related traffic management functions are served under contracts.

d. Appoint one or more member, civilian employees, or contractor personnel as transportation agent (TA) to assist the TO in his/her responsibilities. This may be accomplished by letter, which is to be retained in the transportation office. Service-unique procedures may require the TOs to request TAs be appointed by their commander. Contractor personnel may not be appointed to perform any function involving the obligation or expenditure of Government funds.

14. A Mobility Officer (MO) is the person(s) designated or appointed for planning, coordinating, and/or executing mobility operations for assigned or supported units. Responsibilities are further covered in DOD Component Regulations.

15. Departure/Arrival Airfield Control Group, Port Support Activity, Beach and Terminal Operations, or Tanker Airlift Control Element (TALCE) must act as a focal point between the unit requiring movement and the arrival and departure point activity at the Port of Embarkation (POE) and Port of Debarkation (POD).

D. ADDITIONAL RESPONSIBILITIES

1. Installation Commanders must:

a. Implement this Regulation and all program-related directives issued by HQ MTMC.

b. Staff and support installation transportation offices to ensure their effective operation and consider fully the increased work loads experienced during the summer shipping period and other periods of peak demand.

c. Ensure coordination between the installation housing office and TO to prevent unnecessary Storage-In-Transit (SIT) due to housing unavailability.

d. Allow enough time off from duties for members/employees to arrange for the shipment or receipt of personal property.

e. Ensure the member/employee is furnished all published orders in a timely manner.

f. Ensure the member/employee is made aware of all responsibilities and entitlements in the program and provide all services to which the member/employee is entitled.

g. Ensure coordination between the TO and contracting officers concerning the requirements and performance of local program contractors.

2. TO/PPSO/Consolidated PPSO (CPPSO)/Joint PPSO (JPPSO) must:

a. Establish operating procedures to encompass their entire AOR.

b. Complete all personal property associated functions/documents utilizing TOPS, to the fullest extent possible.

c. Accept or reject carriers' Letters of Intent (LOIs) IAW criteria set forth in this Regulation.

d. Determine the qualification of carriers' agents IAW criteria set forth in this Regulation.

e. Maintain a file of carrier rate tariffs and tenders for the installation's AOR.

f. Coordinate with contracting officers on the negotiation, maintenance, and administration of packing and containerization contracts.

g. Promptly accept and process all applications for the shipment or storage of personal property, regardless of the member's/employee's military Service/Agency affiliation.

h. Ensure Required Port Delivery Date (RPDD) is on the bill of lading (BL).

i. Ensure that the actual shipment weight and cube are entered into TOPS within one working day of receipt from carrier/agent.

(1) For Code J and DPM unaccompanied baggage (UB) shipments, assure the actual weight and cube of the shipment have been received from the carrier/agent by the third working day after pickup.

(2) For Code J and DPM UB shipments, assure the actual weight and cube of the shipment have been entered into TOPS within one working day of receipt from the carrier/agent.

j. Counsel member/employee on their entitlements and responsibilities for the movement and storage of their personal property to include domestic TGBL shipments insurance options.

(1) Basic Valuation Coverage. This coverage holds the carrier liable for $1.25 times the net weight of each shipment. The carrier's liability is limited to that amount only. There is no additional cost to the member/employee for this coverage.

(2) Increased Released Valuation. If the member/employee determines that the basic coverage is not enough to cover the value of the shipment, he/she may choose to increase the coverage by buying additional protection. Using the following options:

(a) Option 1 (Higher Released Valuation or Lump Sum Coverage): An increased value placed on a shipment, by the member/employee, above the $1.25 times the actual net weight of the shipment. (Example: Member/employee may increase the amount multiplied by the actual weight of the shipment, i.e., $2.00 or $3.00.) There is no maximum limit. The Government pays for the basic coverage and the member/employee must pay for the additional amount above the basic coverage.

Note 1: Basic coverage and option 1 is "depreciated value" coverage which ensures each article is covered for its replacement value, less depreciation up to the stated valuation. The weight of an item has no bearing on liability.

(b) Option 2 (Full Replacement Valuation): The member/employee elects this option to buy full replacement value coverage from the carrier, either as a lump sum or by increasing the basic amount from $1.25 per pound to $3.50 per pound. (Must be at least $21,000 or $3.50 times the actual net weight of the shipment, whichever is greater.) This option offers members/employees who may only have a small amount to ship the opportunity to insure their shipment for a "minimum lump sum" of at least $21,000. (Example 1: A member/employee with only 5,000 pound (lbs) shipment who wanted the extra protection of full replacement valuation could "declare" the shipment at a minimum "lump sum" valuation of $21,000, since the shipment weight (5,000 lbs) times $3.50 would only be $17,500.) The Government pays the basic coverage and the member/employee must pay for coverage over and beyond that for basic coverage.

Note 2: Coverage under Option 2 is not depreciated value coverage. The carrier's liability is the amount necessary to replace or repair any and all items lost or damaged up to the declared amount. The shipper under this option would be paid the cost to replace any item damaged, lost, or broken beyond repair. Also, under this insurance option, the carrier has the right to repair or replace items instead of paying the member/employee for them. The member/employee must submit a claim against the carrier before initiating a claim against the Government. The carrier is only responsible to pay full replacement up to $3.50 times the actual shipment weight or $21,000, whichever is greater. A lump sum in excess of that amount will not be covered as full replacement. (Example: A member/employee with an 18,000 lbs shipment would be eligible under Option 2 for "Full Replacement Valuation" at $63,000 (18,000 lbs x $3.50). If the member/employee wanted to declare a "lump sum valuation" of $75,000 on his/her property, the

carrier would not accept this shipment under Option 2.) Members/employee may request assistance from any TO or claims office.

(c) A statement on the Personal Property Government Bill of Lading (PPGBL) must be the reference to valuation of the shipment unless a higher valuation is declared. If a higher valuation is requested by the member/employee, it will be indicated on the DD Form 1299, Application for Shipment and/or Storage of Personal Property, (Figure 401-1) and on the PPGBL. The following statements are required for entry on the PPGBL. For TGBL Domestic Shipments, enter one of the following:

1 Increased Valuation - "Shipment is released at a declared lump sum value of $_____" or "Shipment is released at a valuation of $_____ times the net weight in pounds of the shipment."

2 Full Replacement Protection - "Shipment released at full replacement protection of $3.50 times the net weight in pounds of the shipment or $21,000, whichever is greater."

k. Establish reasonable required delivery dates (RDDs) based on the member's/employee's requirements and other governing elements.

l. Forward a properly prepared and supported DD Form 1299 to the responsible TO when transportation, storage, or related services are required outside the installation's AOR.

m. Select the method and mode of shipment and acquire promptly all transportation or storage necessary to fulfill the requirements of the member/employee, according to the policies and procedures established in this Regulation.

n. Advise the member/employee or the member's/employee's agent of the name of the carrier or warehouse selected and of the dates the necessary packing and related services will be performed before movement or storage of the personal property.

o. Advise the member/employee that container/overflow boxes when used in door-to-door service, will be stuffed at origin residence unless specific exception is authorized by the TO or the member/employee.

p. Distribute personal property traffic as prescribed by this Regulation.

q. Control, secure, issue and prepare PPGBLs, and submit them to the carrier before the agreed time of pickup.

r. Prepare and distribute Transportation Control and Movement Documents (TCMDs).

s. Prepare and distribute customs documents.

t. Maintain the PPGBL public file and ensure it is available in TOPS.

u. Trace location of shipment upon request of Service/Agency member/employee or after RDD has expired.

v. Prepare and distribute Diversion and Long Delivery certificates.

w. Certify on the DD Form 619, Statement of Accessorial Services Performed, (Figure 401-2) or DD Form 619-1, Statement of Accessorial Services Performed (Storage-in-Transit Delivery and Reweigh), (Figure 401-3) the period of time for the SIT facility when a shipment is ordered into and out of SIT. Return a certified copy to the carrier within 10 workdays of receipt.

x. Within the CONUS, contact and assist the Regional Storage Management Office (RSMO) to perform all inspections of carriers agent's local facility once every six months or more depending upon necessity and capability, including checking for damaged or astray personal property shipments. Carriers and agents must expeditiously report these types of shipments to the TO.

y. Inspect personal property shipments IAW the requirements of this Regulation.

z. Perform claims inspections to determine carrier or contractor compliance with tenders of service, tariffs, rate tenders, or contractual obligations.

aa. Inspect each mobile home shipment to ensure carriers are in compliance with the terms and conditions of the mobile homes Tender of Service (TOS) and tariff and rate tenders.

bb. Establish and maintain a performance file for each carrier serving the installation's AOR.

cc. Warn or suspend carriers serving the installation's AOR IAW the policies and procedures established by this Regulation.

dd. Recommend to HQ MTMC, through the overseas commander (when overseas), the disqualification of a carrier with full justification.

ee. Inform immediately the local law enforcement agency when claims or other information reflect the loss of firearms from shipments or storage lots of personal property.

ff. If property is lost or damaged as a result of fire, flood, disaster, theft, or a similar type of occurrence while in the control of a carrier or packing and containerization contractor, investigate immediately any such loss that occurs within the TO/PPSO geographical AOR in which the loss or damage occurs to ensure:

(1) Necessary steps are being taken to prevent further loss, or damage.

(2) All shipments lost or damaged are accounted for.

(3) Actual damage is determined.

(4) The origin or destination TO or PPSOs are notified.

(5) Members/employees whose property has been affected are notified of the incident and of the extent of loss or damage incurred.

(6) MTMC is notified IAW the requirements of this Regulation.

gg. Provide HQ MTMC current information relating to the TOs to update the Personal Property Consignment Instruction Guide (PPCIG). To view the PPCIG, enter URL http://www.mtmc.army.mil then click on Personal Property, Domestic or International , and Consignment Instruction Guide (PPCIG-OL).

hh. Maintain records of DPM rate and shipment data and furnish such data to HQ MTMC.

ii. Furnish statistical data to HQ MTMC through the HQ of the sponsoring military service. EDI will be used to the maximum extent.

jj. Report potential volume movements to HQ MTMC.

kk. Serve as the focal POC for the carrier for all personal property shipments originating at the activity, until such time as the shipment is offered for delivery by the carrier to the destination TO.

ll. Advise the member/employee of his/her responsibilities that must be performed during the movement process

(1) Inform the TO, upon receipt of orders or alert notice, of the desired movement date and all other information pertinent to the move.

(2) Immediately notify the TO of any change in orders or other information affecting the entitlement to ship, store, or accept delivery of personal property.

(3) Establish a realistic RDD with the origin TO.

(4) Ensure all items of personal property are ready for packing or shipment before the anticipated packing and pickup date.

(5) If shipping a privately owned vehicle (POV), deliver the POV to the vehicle processing center (VPC).

(6) If shipping a mobile home, ensure the mobile home is road worthy and ready for movement before the pickup date.

(7) Be present, or ensure a designated agent is present, during the pickup and delivery of the property.

(8) Contact the destination TO immediately upon arrival and provide a contact address and telephone number where the member/employee can be reached to arrange delivery at destination.

(9) To preclude unnecessary use of SIT or temporary lodging allowance payments, make arrangements for the acceptance of the property at destination as soon as possible.

(10) When in possession of a privately owned firearm (POF), determine and comply with laws and ordinances concerning firearm ownership or possession in states or localities the member/employee will travel through, be assigned to, or reside in; and obtain necessary authorizations for firearm possession or ownership outlined in 27 U.S.C. §178.31, Delivery by Common or Contract Carrier, Department of the Treasury, Bureau of Alcohol, Tobacco and Firearms, Publication 5300.5, State Laws and Published Ordinances - Firearms, and by foreign and domestic Government agencies.

(11) Notify immediately the local installation law enforcement agency when becoming aware of the loss of firearms from a shipment or storage lot of personal property.

(12) Verify the accuracy of all items and information (including damage) on all shipping documents before signing.

(13) Verify the accuracy of loss or damage information itemized by the carriers on the inventory and the DD Form 1840, Joint Statement of Loss or Damage at Delivery, (Figure 401-4).

(14) Submit promptly a report on the carrier's performance. (This report is important to the overall evaluation of carrier performance).

(15) Furnish the delivering carrier a signed statement when unpacking or debris removal is waived at destination.

(16) Retain copies of all current transportation or storage documents.

(17) Notify the TO or military claims office of subsequently noticed loss or damage within 70 days after delivery by completing and filing DD Form 1840R, Notice of Loss or Damage (Figure 401-5).

(18) Authorize the carrier to dray loose property to the warehouse for containerization of overflow items.

3. Chiefs of TO/PPSO, TO/CPPSO, and TO/JPPSO must:

a. Provide completed documentation for the member's/employee's shipment or storage.

b. Select the method and mode of shipment commensurate with the RDD established on the DD Form 1299 (Figure 401-1) received from the TO and make necessary arrangements for shipment.

c. Resolve, with the TO, requests for service that cannot be accomplished.

d. Furnish required statistical data to HQ MTMC, through the HQ of the sponsoring military Service/Agency.

e. Provide inbound shipment information for locator action to the TOs served.

f. Accomplish all other traffic management actions required of TOs.

4. TO/PPPOs must:

a. Interview and counsel members/employees on their entitlements and responsibilities in the program.

b. Review the member's/employee's orders and prepare the DD Form 1299 IAW the member's/employee's entitlements and requirements. This includes the establishment of a realistic RDD.

c. Forward the DD Form 1299 and all supporting documentation to include customs documents to the responsible TO.

d. Monitor the arrival of newly assigned personnel and assist the responsible TO, CTO, or JPPSO in arranging for the receipt and delivery of inbound shipments of personal property.

e. Assist the member/employee in filing a claim for loss or damage through the TO or claims office if there is no claim service available at the facility to which the member/employee is assigned.

5. Terminal Commanders (Air or Water) must:

a. Issue letters of warning when shipments are not picked up by port agents at military air or water terminals within the time limits prescribed by the TOS.

b. Issue letters of warning to ITGBL carriers when violations of the TOS are observed.

c. Report to HQ MTMC personal property shipping containers observed in transit that are unsatisfactory or are suspected of not meeting DOD specifications.

d. Issue a Transportation Discrepancy Report (TDR), SF 361, IAW this Regulation, Part II, Chapter 210 when loss or damage is discovered in shipments transiting military air or water terminals.

e. Issue a certificate showing ocean or aerial port used for all Codes 5 and T shipments.

E. ASSIGNMENT OF GEOGRAPHICAL AOR

1. This Paragraph applies to all DOD-sponsored personal property shipments worldwide, but does not apply to the processing of claims for loss or damage to personal property. For claims procedures, see Chapter 410 of this Regulation and regulations of the military Service/Agency concerned.

2. DOD Components must:

a. Establish or transfer AOR in coordination with the Commander, MTMC.

b. Review and coordinate MOU with the military staff Agencies' controlling manpower, resources, and funding.

c. Serve as the POC for activities and installations under their jurisdiction to resolve problems concerning the assignment of AOR.

3. TOs (PPSOs/PPPOs) must:

a. Coordinate through military Service/Agency command channels on all matters relating to the assignment of AOR.

b. Develop and process, through command channels, information required for the preparation and processing of a MOU.

c. Initiate a MOU.

4. Geographical areas are established within each state in the CONUS and Alaska, as well as all overseas areas, except as otherwise designated in the PPCIG.

F. INSTALLATION TRANSFER, ACTIVATION, AND DEACTIVATION PROCEDURES

1. Deactivation or Transfer of an Installation's Assigned AOR.

a. When responsibilities are to be transferred from one installation or activity to another, the losing installation or activity will prepare a MOU/Interservice Support Agreement (ISSA). A joint MOU/ISSA will be executed between the gaining and the losing installation or activity and a copy provided to the Service/Agency HQ. When an agreement cannot be reached at the local level, the matter will be referred to the Service/Agency HQ.

b. The Service/Agency HQ will notify HQ MTMC when agreements are final concerning the transfer of functional responsibility from one installation to another, the transfer of AOR, or the activation or deactivation of an installation. The notifications will be timely to allow updating of this Regulation and the PPCIG and the establishment of overall operational procedures (i.e., LOIs and rate programs).

c. All records and files will be transferred from the deactivated installation to the new responsible installation.

d. Interservice and interdepartmental logistic support will follow the basic policies and principles prescribed in DOD policies.

2. Budget and Funding. Each military Service/Agency is assigned specific AOR for providing program-related services to all members/employees, regardless of their military Service/Agency affiliation. Within these AOR, each military Service/Agency will provide administrative and operational support to the other military Services/Agencies as a common service. Such common servicing does not apply to industrial fund activities that provide service only on a seller-buyer basis. In these cases, the direct costs arising from the acquisition of

services, including contract storage, PPGBLs, and packing and containerization will be provided on a cross-servicing basis IAW regulations of the military Service/Agency.

G. PERSONAL PROPERTY COUNSELING

1. DD Form 1797, Personal Property Counseling Checklist, (Figure 401-6).

a. DD Form 1797 should be used as a guide by the counselor during the counseling session. All pertinent items must be discussed with the member/employee and checked off in the blocks provided. At the conclusion of the counseling session, the form must be signed by both the member/employee and the counselor, with statements covering any unusual requirements or problem areas initialed by the member/employee and the counselor. A computer generated checklist may be used in lieu of the DD Form 1797.

b. Advise the member/employee or the member's/employee's agent of who to contact at the origin and destination TO

c. DD Form 1797 is available through normal publications distribution channels.

d. The completed DD Form 1797 must be distributed as follows:

(1) One signed copy must be retained in the origin shipment files.

(2) One copy must be provided to the member/employee.

2. Claims Counseling.

a. The Military Personnel and Civilian Employee's Claim Act is a gratuitous payment statute enacted by Congress to partially compensate a member/employee for personal property that is lost, damaged, or destroyed incident to service.

b. The Act does not provide insurance coverage, nor was it intended to replace insurance.

c. Congress instead intended to alleviate some of the hardships of military life by providing fair compensation for certain types of property losses.

d. The Act was never intended to restore damaged property to a better condition than it was in prior to a move.

e. Time limitation for filing claims against the US Government is two years from the date of delivery.

f. Members/employees should be advised not to accept a partial settlement from carriers, as this may denote final payment in some cases.

g. For Army and Air Force, additional claims information may be obtained from the local Staff Judge Advocate (SJA).

3. Counselors will ensure that all members/employees are advised of items that cannot be shipped as HHG or UB. Such items are listed as restricted/prohibited items in the Joint Federal Travel Regulations (JFTR)/Joint Travel Regulations (JTR), PPCIG, and in DOD Component publications. Examples of hazardous items are listed in Appendix I to this Regulation.

4. For TGBL and ITGBL shipments, the member/employee will receive a toll free number prior to pick up for direct communication between the member/employee and the carrier. The toll free number may be used for customer inquiries and problem resolution during any phase of the move. The carrier must respond to the member's/employee's concerns within 24 hours from the member's/employee's initial call if received Monday through Friday and by close of business the following workday for calls/inquiries received by the carrier on Saturdays, Sundays or legal (officially declared national) holidays. It will not be used for shipment changes (pick up date or delivery date changes). The member/employee must contact the local TO for any changes.

5. Boat Counseling. See Chapter 412, Paragraph B, this Regulation.

6. Members/employees are authorized to ship Professional Books, Papers, and Equipment (PBP&E, also called PRO or PRO-Gear) and Military Affiliate Radio System (MARS) equipment at Government expense IAW the JFTR/JTR. The shipment of PBP&E and MARS equipment must be in the same manner and under the same conditions as other HHG. All items shipped as PBP&E must be identified by the member/employee and packed separately and containers must be marked. The actual weight of items shipped as PBP&E must be marked separately on shipping documents. Authorization for the shipment of PBP&E must be included in the DD Form 1614, Request and Authorization for DOD Civilian Permanent Duty Travel, (Figure 401-7), for civilian personnel.

7. Shipment of Liquor/Alcoholic Beverages.

a. Domestic Shipments. Members/employees may ship liquor/alcoholic beverages in their personal property shipments subject to the carrier's acceptance of these items, and subject to state laws.

b. International Shipments.

(1) Shipments Entering Customs Territory of the United States (CTUS). Liquor/alcoholic beverages are restricted and may be shipped separate from the rest of the member's/employee's personal property. Limited quantities may enter duty-free if accompanied by the member/employee. Unaccompanied shipments are subject to duty payments. The Government is not responsible for any fee or customs charges and certain charges may or may not be reimbursable.

(2) Shipments from CONUS to Overseas, Intertheater, or Intratheater. Shipment of liquor/alcoholic beverages will be IAW the destination country general instructions page in the PPCIG, Volume II (http://www.mtmc.army.mil then click on Personal Property, Domestic, and Consignment Instruction Guide). (If there is no specific guidance in the PPCIG on shipment of alcoholic beverages to a particular destination country, the TO will contact the destination TO or General Service Officer (GSO) for instructions.)

(3) Additional detail on restrictions on liquor/alcoholic beverages can be found in this Regulation, Part V, DOD Customs and Border Clearance Policies and Procedures, Appendix A by entering URL https://business.transcom.mil/ then click on DOD Customs Programs, and DOD Customs and Border Clearance Regulation V.

H. APPLICATION FOR SHIPMENT AND/OR STORAGE OF PERSONAL PROPERTY, DD FORM 1299

1. A separate DD Form 1299 (Figure 401-1) must be prepared for each shipment a member/employee makes, and the applications must be numbered 1 of 2, 2 of 2, etc. If the member/employee cannot be present to apply for shipment, the completed DD Form 1299 must be signed by the member's/employee's authorized agent. The member/employee may make a signed written request for shipment that must be retained in the origin shipment files.

2. Preparation of the DD Form 1299.

a. Each Block of the DD Form 1299 will be completed. An in transit contact phone number and address must be shown in Blocks 8.g. and h. The TO, in conjunction with the member/employee, will establish requested pack, pickup, and delivery dates. Members/employees should not be required to sign a blank DD Form 1299.

b. For the shipment of PBP&E, annotate the estimated weight or the word "None" in Block 7.a.(2).

3. Persons Authorized to Complete and Submit the DD Form 1299 are:

a. The member/employee.

b. Any person acting under a current power of attorney or an informal letter of authority signed by the member/employee.

c. Dependent of member/employee:

(1) Army and Air Force Personnel. When a dependent has a travel authorization to or from overseas, the dependent may apply for shipment without the member's/employee's power of attorney (POA) or letter of authorization provided the shipment is to the member's/employee's new duty station or the property is being placed in NTS. If the dependent is requesting movement of the property to any other point, the application will be supported by the member's/employee's POA or letter of authorization. Allow Air Force dependents, without POA, to sign the DD Form 1299 when the member/employee is stationed in the CONUS, dependent is listed on the service order, and the shipment is going to a member's/employee's new duty station.

(2) Navy, Coast Guard, and Marine Corps Personnel. The dependent may request shipment when all of the following conditions exist: The member/employee is currently assigned to the overseas duty station; concurrent travel of dependents to the overseas duty station was not authorized; the shipment is being made to the member's/employee's overseas duty

station; the dependent is in receipt of dependent entry approval or authorization; and the shipment of HHG to the overseas duty station is not prohibited or restricted.

d. Other persons as authorized by the member's/employee's DOD Component regulation.

e. A commanding officer of an installation or the commanding officer's designated representative.

f. In cases of the member's/employee's death, DD Form 1300, Report of Casualty, (Figure 401-8), DD Form 2064, Certificate of Death Overseas, Summary Court Officer Appointment Order, or the Official Bulletin Notice can be used instead of orders as an attachment to the DD Form 1299. Care should be exercised to ensure that the property is shipped to the authorized next of kin or individual legally entitled to receive the property. (See Chapter 410 of this Regulation.) The following applies to civilians only: While completing and signing the DD Form 1299, if it is the same date as the employee's death, there is no authority to ship HHG if the death is at a CONUS permanent duty station (PDS).

g. When the DD Form 1299 is prepared by a dependent or agent, the full name, grade, rank or rating, Social Security Number (SSAN), and Service/Agency of the member/employee will be shown in Block 6. One copy of the original DD Form 1299, custom forms, and the POA, the informal letter of authority, or the dependent travel authorization will be retained by the origin TO in the shipment file.

4. Submission of DD Form 1299. Any TO will assist the member/employee in preparing a DD Form 1299 regardless of the member's/employee's military service/agency affiliation, and submit the DD Form 1299 to the responsible origin PPSO.

I. REQUIRED SUPPORTING DOCUMENTATION

The following documentation is required for shipment:

1. Member's/employee's orders or other authority. Copies of the member's/employee's orders are not required when shipment is requested using dependent's travel authorization that references the member's/employee's orders (including special order number, issuing HQ, and date of issue).

2. One copy of the DD Form 1797, (Figure 401-6) signed by the member/employee and the counselor.

3. For shipments of firearms, any forms or certificates prescribed by the member's/employee's sponsoring DOD Component or other regulatory Agency.

4. Copies of POA, time extension certificates, and any other documents required in special cases.

5. Customs documents to effect duty-free clearance of personal property shipments for those areas where specific customs documents are required such as:

a. United Kingdom - DD Form 1434, United Kingdom (UK) Customs Declaration for the Importation of Personal Effects of US Forces/Civilian Personnel on Duty in the UK (Figure 401-9). See the PPCIG for preparation instructions.

b. CTUS - DD Form 1252, US Customs Declaration for Personal Property Shipments, Part I (Figure 401-10).

(1) DD Form 1252-1, US Customs Declaration for Personal Property Shipments, Part II (Figure 401-11). Guidance for shipment of POF is found in this Regulation, Part V, DOD Customs and Border Clearance Policies and Procedures.

(2) EUCOM Form 30-3, Shippers' Agriculture Inspection Certificate, (Figure 401-12). Applies only to shipments originating within the United States European Command (USEUCOM) theater.

J. DISTRIBUTION OF THE DD FORM 1299 AND SUPPORTING DOCUMENTS

1. Provide a copy of the DD Form 1299 to the member/employee.

2. Forward the completed DD Form 1299 and copies of all supporting documents to the TO. Facsimile is acceptable.

3. Retain one signed copy of each document for local files.

4. On all ITGBL shipments from CONUS or Alaska to overseas destinations or between overseas areas, attach the following documents to the original copy of the PPGBL and give those documents to the carrier for customs clearance:

a. Clearance forms required by the host Government.

b. A copy of DD Form 1299.

c. A copy of member's/employee's Permanent Change of Station (PCS) or Temporary Duty (TDY)/Temporary Additional Duty (TAD) orders.

5. On all ITGBL shipments from overseas areas to the CTUS, attach the following documents to the original copy of the PPGBL, and provide these documents to the carrier for customs clearance:

a. A copy of DD Form 1252 or 1252-1 and EUCOM Form 30-3 (if applicable).

b. A copy of DD Form 1299.

c. A copy of member's/employee's PCS or TDY/TAD orders.

6. On all international contract-procured shipments, provide the contractor with a copy of DD Form 1299, member's/employee's orders, any required customs documents, and a waterproof pouch. Provide the out-loading terminal a copy of the DD Form 1299, the member's/employee's orders, and all customs documents.

K. RECOMMENDATIONS FOR IMPROVEMENT

Users are encouraged to recommend changes that will improve procedures. Each proposed change to this Regulation must be forwarded through command channels to staff representatives of the respective military Service/Agency to US Transportation Command/TCJ4-LTC, 508 Scott Drive, Scott AFB IL 62225-5357.

Army

HQ Department of the Army
Attn: DALO-FPT
500 Army Pentagon
Washington DC 20310-0500

Navy

Commander
Naval Supply Systems Command (Code 53)
5450 Carlisle Pike
P.O. Box 2050
Mechanicsburg PA 17055-0791

Air Force

HQ USAF/ILTT
1030 Air Force Pentagon
Washington DC 20330-1030

Marine Corps

Commandant of the Marine Corps (LFT-3)
Headquarters, US Marine Corps
2 Navy Annex
Washington DC 20380-1775

Coast Guard

Commandant (G-WPM-2)
US Coast Guard
2100 Second Street SW
Washington DC 20593-0001

L. PPSO REQUIRED REGULATIONS

Appendix K contains a list of publications considered essential for a successful program at a PPSO. PPSO requirements for these publications must be submitted through their established publications distribution channels.

M. FORMS SUPPLY

Any reference to forms in this Regulation applies to the specific form discussed or an authorized automated version. Unless otherwise specifically stated, all forms discussed in this

Regulation are available through normal forms supply channels and/or generated in the personal property automated system.

N. TRANSPORTATION MANAGEMENT ADVISORY (TMA)

TMAs will be provided to each TO by MTMC/MTPP and, upon receipt, should be filed in Appendix Q of this Regulation until canceled or superseded.

APPLICATION FOR SHIPMENT AND/OR STORAGE OF PERSONAL PROPERTY
(Read Privacy Act Statement on back before completing form.)

1. DATE PREPARED *(YYYYMMDD)*
2. SHIPMENT NUMBER
3. NAME OF PREPARING OFFICE
4. TO *(Responsible Origin Personal Property Shipping Office)*
   a. NAME
5. NAME OF DESTINATION PERSONAL PROPERTY SHIPPING OFFICE
   b. ADDRESS *(Street, Suite Number, City, State, ZIP Code)*

6. MEMBER OR EMPLOYEE INFORMATION

a. NAME *(Last, First, Middle Initial)*	b. RANK/GRADE	c. SSN	d. AGENCY

7. REQUEST ACTION BE TAKEN TO TRANSPORT OR STORE THE FOLLOWING:

a. HOUSEHOLD GOODS/UNACCOMPANIED BAGGAGE/ITEMS/NO. OF CONTAINERS *(Enter quantity estimate)*

(1) POUNDS	(2) POUNDS OF PROFESSIONAL BOOKS, PAPERS, AND EQUIPMENT (PBP&E) *(Enter "NONE" if not applicable)*	(3) EXPENSIVE AND VALUABLE ITEMS *(Number of cartons)*

b. MOBILE HOME INFORMATION *(Enter dimensions in feet and inches)*

(1) SERIAL NUMBER	(2) LENGTH	(3) WIDTH	(4) HEIGHT	(5) TYPE EXPANDO *(Describe)*

c. MOBILE HOME SERVICES REQUESTED *(X as applicable)*
☐ CONTENTS PACKED ☐ MOBILE HOME BLOCKED ☐ MOBILE HOME UNBLOCKED ☐ STORED AT ORIGIN ☐ STORED AT DESTINATION

8. THIS SHIPMENT/STORAGE IS REQUIRED INCIDENT TO THE FOLLOWING CHANGE OF STATION ORDERS:

a. TYPE ORDERS *(X one)*
☐ PERMANENT ☐ TEMPORARY
b. ISSUED BY
c. NEW DUTY ASSIGNMENT
d. DATE OF ORDERS *(YYYYMMDD)*
e. ORDERS NUMBER
f. PARAGRAPH NO.
g. IN TRANSIT TELEPHONE NO. *(Include Area Code)*
h. IN TRANSIT ADDRESS *(Street, Apartment Number, City, State, ZIP Code)*

9. PICKUP (ORIGIN) INFORMATION
   a. ADDRESS *(Street, Apartment Number, City, County, State, ZIP Code) (If a mobile home park, include mobile home court name)*
   b. TELEPHONE NUMBER *(Include Area Code)*

10. DESTINATION INFORMATION
   a. ADDRESS *(Street, Apartment Number, City, County, State, ZIP Code) (If a mobile home park, include mobile home court name)*
   b. AGENT DESIGNATED TO RECEIVE PROPERTY

11. EXTRA PICKUP/DELIVERY ADDRESS *(If applicable)*

12. SCHEDULED DATE FOR *(YYYYMMDD)*
   a. PACK
   b. PICKUP
   c. DELIVERY

13. REMARKS

14. I CERTIFY THAT NO OTHER SHIPMENTS AND/OR NONTEMPORARY STORAGE HAVE BEEN MADE UNDER THESE ORDERS EXCEPT AS INDICATED BELOW *(If none, indicate "NONE.")*

a. FROM	b. TO	c. NET POUNDS *(Actual or estimated)*	d. POUNDS OF PBP&E *(Actual or estimated)*

15. CERTIFICATION OF SHIPMENT RESPONSIBILITIES/STORAGE CONDITIONS
I certify that I have read and understand my shipping responsibilities and storage conditions printed on the back side of this form.

a. SIGNATURE OF MEMBER/EMPLOYEE
b. DATE SIGNED
c. ADDRESS OF CONTRACTOR *(Street, Suite No., City, State, ZIP Code)*
d. NAME OF CONTRACTOR *(Origin DPM or non-temporary storage)*

16. CERTIFICATE IN LIEU OF SIGNATURE ON THIS FORM IS REQUIRED WHEN REGULATIONS SO AUTHORIZE. Property is baggage, household goods, mobile home, and/or professional books, papers and equipment authorized to be shipped at government expense.

a. REASON FOR NONAVAILABILITY OF SIGNATURE
b. CERTIFIED BY *(Signature)*
c. TITLE

DD FORM 1299, SEP 1998 (EG) PREVIOUS EDITION IS OBSOLETE. WHS/DIOR, Oct 98

Figure 401-1. DD Form 1299, Application for Shipment and/or Storage of Personal Property

PRIVACY ACT STATEMENT

AUTHORITY: 37 USC 406, 5 USC 5726; and E.O. 9397.

PRINCIPAL PURPOSE(S): Primarily used for evaluating requests submitted by Service members and eligible individuals for shipment and/or storage of personal property. Also used to prepare the Government bill of lading and other shipping documents (as applicable) to move the personal property. Used by the Finance Office for collection from the member in case goods to be shipped exceed Government entitlement limits.

ROUTINE USE(S): DD Form 1299 is provided to commercial carriers and shipping agents as the official shipping and storage order.

DISCLOSURE: Voluntary; however, failure to provide the requested information may delay shipping dates and impede storage arrangements.

CERTIFICATION OF SHIPMENT RESPONSIBILITIES

In consideration of said household goods or mobile homes being shipped at Government expense, I hereby agree that:

1. This shipment/storage lot consists of my property or the property awarded to my ex-spouse incident to a divorce which was acquired by me prior to the effective date of my orders.

2. If my orders are modified or cancelled and affect this shipment, I will immediately notify the shipping office at point of origin (or port, if any) and destination.

3. I will remit the proper amount or consent to the collection from my pay as may be necessary to cover all excess costs occasioned by this shipment.

4. I agree, prior to shipment and at my expense to place my mobile home in condition to withstand transportation.

5. I understand that transportation of my mobile home and shipment of baggage and household goods within the United States are provided in Chapter 10, JTR.

6. I understand the Government will not be responsible for goods remaining in storage after the expiration of the authorized period.

7. Professional books, papers and equipment are or were necessary in the performance of official duties.

CONDITION FOR STORAGE

In consideration of said household goods being stored at Government expense, I hereby agree as follows:

1. I will notify the transportation office responsible for storing my nontemporary storage account of any changes in my storage entitlement.

2. The Government is authorized to enter into any agreement and to do all acts and things which may be convenient or necessary to store the household goods. Storage of the household goods is furnished subject to such applicable laws and regulations as are now or may hereafter be in effect.

3. The Government may store the household goods in Government facilities or in commercial storage under a Government contract.

4. The Government may move or transfer by any appropriate means the household goods from their present location to Government or commercial storage facilities and from such facilities to an appropriate destination upon termination of storage.

5. When the household goods are stored in Government facilities and the authorized period for storage at Government expense expires, the Government may require me to remove the household goods from their place of storage. In the event, after 30 days notice, I fail to remove the household goods, or if, after diligent effort, notice to me cannot be effected, the Government may proceed as follows: (a) place and store the household goods in commercial storage at my expense, or (b) if a commercial warehouse will not accept the household goods for commercial storage at my expense, the Government is hereby authorized to take whatever action in accordance with law and regulation may be deemed appropriate to effect disposition of the household goods.

6. When the household goods are stored in commercial facilities and the authorized period of storage at Government expense expires, all storage and incidental charges accruing after the last day of the authorized period of storage shall be at my expense.

7. The Government shall not be liable for charges incident to storage or services in connection with the household goods (1) not authorized by law or regulation to be at Government expense, (2) in excess of weight limitations imposed by law or regulation, or (3) after the expiration of the period of which storage at Government expense is authorized.

8. Government contracts for the storage of household goods limit the liability of the warehouseperson to $50 per article or package as listed on the warehouse receipt. Applicants are advised to consider obtaining insurance on their household goods while such goods are in storage.

DD FORM 1299 (BACK), SEP 1998

Figure 401-1. DD Form 1299, (Back) (Cont'd)

STATEMENT OF ACCESSORIAL SERVICES PERFORMED

This form is required only when accessorial services are chargeable to the Government. Carrier will enter complete information or "None" in columns. "Unit Price" and "Charge" columns may be omitted when charges are itemized on the Standard Form 1113.

Form Approved
OMB No. 0704-0022
Expires Oct 31, 2001

The public reporting burden for this collection of information is estimated to average 5 minutes per response, including the time for reviewing instructions, searching existing data sources, gathering and maintaining the data needed, and completing and reviewing the collection of information. Send comments regarding this burden estimate or any other aspect of this collection of information, including suggestions for reducing the burden, to Department of Defense, Washington Headquarters Services, Directorate for Information Operations and Reports (0704-0022), 1215 Jefferson Davis Highway, Suite 1204, Arlington, VA 22202-4302. Respondents should be aware that notwithstanding any other provision of law, no person shall be subject to any penalty for failing to comply with a collection of information if it does not display a currently valid OMB control number.

PLEASE DO NOT RETURN YOUR FORM TO THE ABOVE ADDRESS.

1. GOVERNMENT BILL OF LADING NUMBER
2. DATE OF PICKUP AT ORIGIN (YYYYMMDD)
3.a. NAME OF OWNER (Last, First, Middle Initial)
b. SSN
c. RANK OR GRADE
4. ORIGIN OF SHIPMENT
5. DESTINATION OF SHIPMENT
6.a. ORDERING ACTIVITY/INSTALLATION NAME
b. LOCATION
7.a. NAME OF CARRIER
b. NAME OF AGENT (Last, First, Middle Initial)
8. SIGNATURE OF CARRIER'S REPRESENTATIVE
9. DATE (YYYYMMDD)
10. CARRIER'S SHIPMENT REFERENCE NO.
11. AGENT OR DRIVER CODE
12. PROFESSIONAL BOOKS, PAPERS AND EQUIPMENT (PBP&E) INCLUDED IN SHIPMENT (If not included, write "None".)
LBS.
13. STORAGE-IN-TRANSIT (SIT)
a. STORED AT (1) CITY (2) STATE
b. SIT SERVICES PROVIDED AT (X one) ☐ ORIGIN ☐ DESTINATION ☐ OTHER
DATES (YYYYMMDD):
c. IN
d. ORDERED OUT
e. DELIVERED OUT
f. NUMBER OF DAYS
g. NET WEIGHT
h. REQUESTED DELIVERY DATE (YYYYMMDD)
i. SHIPMENT ORDERED INTO AND OUT OF SIT ON DATES INDICATED AND AUTHORIZED BY SIT CONTROL NO.
j. WAS STORAGE POINT FOR CARRIER'S CONVENIENCE (X one) ☐ YES ☐ NO
14. REWEIGH CERTIFICATION (If applicable)
a. NUMBER
b. ORIGINAL GROSS
c. REWEIGH GROSS
d. ORIGINAL TARE
e. REWEIGH TARE
f. ORIGINAL NET
g. REWEIGH NET
15. APPLIANCES SERVICED (Owner/Agent must initial each entry separately.)

TYPE a.	MAKE/MODEL NO./MANUFACTURER b.	OWNER/AGENT INITIALS c.

16. ACCESSORIAL SERVICES

PACKING, PACK MATERIALS AND UNPACKING (1)	NUMBER (2)	UNIT PRICE (3)	CHARGE (4)
a. DISH PACK			
b. CARTONS (Less than 3 cubic feet)			
c. CARTONS (3 cubic feet)			
d. CARTONS (4-1/2cubic feet)			
e. CARTONS (5 cubic feet)			
f. CARTONS (8 1/2 cubic feet)			
g. WARDROBE (Not less than 10 cubic feet)			
h. MATTRESS, CRIB			
i. MATTRESS (Not exceeding 39" x 75")			
j. MATTRESS (Not exceeding 54" x 75")			
k. MATTRESS (39" x 80")			
l. MATTRESS (Exceeding 54" x 75")			
m. TOTAL			
n. TOTAL SUBJECT MAX-PAK $ (cwt)			
o. GRANDFATHER CLOCK CARTONS			
p. CORRUGATED CONTAINERS (Special constr.)			
q. BOXES - WOODEN/CRATES (Not over 5 cu.ft.)			
r. BOXES (Over 5 cu.ft.,not over 8 cu.ft.)			
s. BOXES (Over 8 cu.ft.) (Gross cu.ft.:)			
t. CRATES (Cubic feet:) (Minimum charge:)			
u. CARTONS, DOUBLE WALL (PPP-B-1364) & TRIPLE WALL (PPP-B-640) (Not over 4 cu.ft.)			
v. CARTONS (Over 4 cu.ft.,less than 7 cu.ft.)			
w. CARTONS (7 cu.ft.,less than 15 cu.ft.)			
x. TOTAL PACKING CHARGE			
y. LABOR (Describe service in "Remarks") (Enter number of man-hours)			
z. (X as applicable) ☐ EXTRA DELIVERY ☐ EXTRA PICKUP ☐ AUXILIARY SERVICES			
aa. PIANO/ORGAN CARRY SERVICE			
bb. ELEVATOR/STAIR/EXCESS DISTANCE CHARGE			
cc. SERVICING APPLIANCES/OTHER ARTICLES (As itemized and initialed in Item 15)			
dd. OTHER (Describe in "Remarks")			
ee. TOTAL ACCESSORIAL SERVICE CHARGES			

17. REMARKS

18. STATEMENT OF OWNER, MILITARY INSPECTOR/TRANSPORTATION OFFICER
a. MATERIALS WERE FURNISHED/ACCESSORIAL SERVICES WERE PERFORMED ☐ AT ORIGIN ☐ OTHER (Explain) ☐ AT DESTINATION
b. SIGNATURE (Do not sign until Carrier has completed column 16(2).)
c. DATE SIGNED (YYYYMMDD)

19. TRANSPORTATION OFFICER CERTIFICATION. I CERTIFY THAT SHIPMENT SERVICES WERE ACCOMPLISHED AS SHOWN BELOW.
a. SERVICES ACCOMPLISHED (X as applicable)
☐ (1) ACCESSORIAL SERVICES (Listed in Item 16)
☐ (2) STORAGE-IN-TRANSIT
☐ (3) REWEIGH CERTIFICATION
☐ (4) THIRD PARTY SERVICES
☐ (5) BULKY ARTICLE CHARGE
☐ (6) WAITING TIME
☐ (7) UNPACKING SERVICE (Baggage only)
☐ (8) OVERTIME LOADING/UNLOADING CHARGE
☐ (9) OTHER (Specify)
b. SIGNATURE OF TRANSPORTATION OFFICER
c. TITLE (Print or type)
d. DATE SIGNED (YYYYMMDD)

DD FORM 619, OCT 1998 (EG) PREVIOUS EDITION IS OBSOLETE.

Figure 401-2. DD Form 619, Statement of Accessorial Services Performed

STATEMENT OF ACCESSORIAL SERVICES PERFORMED
(STORAGE-IN-TRANSIT DELIVERY AND REWEIGH)

Form Approved
OMB No. 0704-0022
Expires Oct 31, 2001

The public reporting burden for this collection of information is estimated to average 5 minutes per response, including the time for reviewing instructions, searching existing data sources, gathering and maintaining the data needed, and completing and reviewing the collection of information. Send comments regarding this burden estimate or any other aspect of this collection of information, including suggestions for reducing the burden, to Department of Defense, Washington Headquarters Services, Directorate for Information Operations and Reports (0704-0022), 1215 Jefferson Davis Highway, Suite 1204, Arlington, VA 22202-4302. Respondents should be aware that notwithstanding any other provision of law, no person shall be subject to any penalty for failing to comply with a collection of information if it does not display a currently valid OMB control number.

PLEASE DO NOT RETURN YOUR FORM TO THE ABOVE ADDRESS.

DISTRIBUTION: 1. ORIGINAL COPY TO CARRIER. 2. COPY TO PROPERTY OWNER. 3. ADDITIONAL COPIES MAY BE MADE FOR CARRIER'S USE.

1. GOVERNMENT BILL OF LADING NUMBER
2. DATE OF PICKUP AT ORIGIN *(YYYYMMDD)*
3.a. NAME OF OWNER *(Last, First, Middle Initial)*
b. SSN
c. RANK OR GRADE
4. ORIGIN OF SHIPMENT
5. DESTINATION OF SHIPMENT
6.a. ORDERING ACTIVITY/ INSTALLATION NAME
b. LOCATION
7.a. NAME OF CARRIER
b. NAME OF AGENT *(Last, First, Middle Initial)*
8. SIGNATURE OF CARRIER'S REPRESENTATIVE
9. DATE *(YYYYMMDD)*
10. CARRIER'S SHIPMENT REFERENCE NO.
11. AGENT OR DRIVER CODE
12. REMARKS

13. STORAGE-IN-TRANSIT (SIT)
a. STORED AT *(City and State)*
b. SIT SERVICES WERE PROVIDED AT *(X as applicable)* ☐ DESTINATION ☐ OTHER
c. DATE IN *(YYYYMMDD)*
d. DATE OUT *(YYYYMMDD)*
e. NUMBER OF DAYS
f. NET WEIGHT
g. THIS SHIPMENT WAS ORDERED INTO AND OUT OF SIT ON DATES INDICATED HEREON AND AUTHORIZED BY SIT CONTROL NUMBER:
SIT IN EXCESS OF 90 DAYS WAS AUTHORIZED *(X)* ☐ YES ☐ NO
h. SIGNATURE OF TRANSPORTATION OFFICER
i. DATE *(YYYYMMDD)*

14. REWEIGH CERTIFICATION
a. ORIGINAL GROSS
b. REWEIGH GROSS
c. ORIGINAL TARE
d. REWEIGH TARE
d. ORIGINAL NET
e. REWEIGH NET
f. THIS SHIPMENT WAS ORDERED FOR REWEIGH AND SERVICES WERE ACCOMPLISHED AS SHOWN ABOVE.
(1) SIGNATURE OF TRANSPORTATION OFFICER
(2) DATE *(YYYYMMDD)*

15. ADDITIONAL SERVICES	(1) NUMBER	(2) UNIT PRICE	(3) CHARGE
a. LABOR - NUMBER OF MAN-HOURS *(Describe services in "Remarks")*			
b. PIANO/ORGAN OR EXCESS CARRY SERVICES			
c. OTHER *(Describe in "Remarks")*			

16. CONSIGNEE'S STATEMENT OF DELIVERY AND LOSS OR DAMAGE
Notice is hereby given to the carrier to whom this statement of accessorial services performed is surrendered that the shipment was received in condition as shown below and that claim, if any, will be made for the value of such loss and/or damage as indicated.

a. DESCRIPTION OF LOSS OR DAMAGE	b. ACTUAL OR ESTIMATED WEIGHT

17. WAIVER
Unpacking and removal of packing material, boxes/cartons, and other debris is hereby waived.
a. INVENTORY NUMBERS
b. SIGNATURE

18. CERTIFICATION. I have received the property described on this form:
a. FROM *(Name of Transportation Company)*
b. AT *(Actual Point of Delivery)*
in apparent good order and condition except as noted above.
c. SIGNATURE OF CONSIGNEE OR AUTHORIZED AGENT
d. DATE OF DELIVERY *(YYYYMMDD)*

DD FORM 619-1, OCT 1998 (EG) PREVIOUS EDITION IS OBSOLETE.

Figure 401-3. DD Form 619-1, Statement of Accessorial Services Performed (Storage-In-Transit Delivery and Reweigh)

JOINT STATEMENT OF LOSS OR DAMAGE AT DELIVERY

Privacy Act Statement

AUTHORITY:	The requested information is solicited pursuant to one or more of the following: 5 U.S.C. 301, 31 U.S.C. 3721 et seq., 31 U.S.C. 3711 et seq., and EO 9397, November 1943 (SSN).
PRINCIPLE PURPOSE(S):	The information requested is to be used in evaluating claims.
ROUTINE USE(S):	The information requested is used in the settlement of claims for loss, damage or destruction of personal property and recovery from liable third parties.
DISCLOSURE:	Voluntary; however, failure to supply the requested information or to execute the form may delay or otherwise hinder the payment of your claim.

GENERAL INSTRUCTIONS: The carrier's/contractor's representative will complete and sign DD Form 1840 and obtain the signature of the member or member's agent. The member or member's agent will not, under any circumstances, sign a blank or partially completed DD Form 1840. Three completed copies of DD Form 1840 and blank DD Forms 1840R will be provided the member or member's agent by the carrier's/contractor's representative for each shipment. If no loss or damage is involved, write "NONE" in description column.

SECTION A - GENERAL *(To be completed by carrier/contractor)*

1. NAME OF OWNER *(Last, First, Middle Initial)*	2. SOCIAL SECURITY NO.	3. RANK OR GRADE	4. NET WT OF SHIPMENT

5. ORIGIN OF SHIPMENT *(City and State/Country)*	6. DESTINATION OF SHIPMENT *(City and State/Country)*

7. PPGBL/ORDER NUMBER	8. PICKUP DATE	9. NAME AND ADDRESS OF CARRIER/CONTRACTOR

10. CODE OF SERVICE	11. SCAC	12. CARRIER/CONTR REF. NO.

SECTION B - RECORD OF LOSS OR DAMAGE *(To be completed jointly by member and carrier's/contractor's representative)*

13. Notice is hereby given to the carrier/contractor to whom this statement is surrendered that the shipment was received in condition as shown below and the claim, if any, will be made for such loss or damage as indicated subject to further inspection and notification to the claims office within 70 days by DD Form 1840R found on the reverse side hereof. **THE VALUE INDICATED IN BLOCK 14c IS TO BE USED FOR QUALITY CONTROL ONLY.**

a. Inv. No.	b. Name of Item	c. Description of loss or damage *(If missing, so indicate)*

14. ACKNOWLEDGMENT BY MEMBER OR AGENT *(X and complete as applicable and sign below)*

a. I received my property in apparently good condition except as indicated above. A continuation sheet ☐ was ☐ was not used.

b. Unpacking and removal of packing material, boxes, cartons, and other debris ☐ is ☐ is not waived.

c. I estimate the amount of my loss and/or damage at $

d. I have received three copies of this form. **I understand that I have 70 days to list any further loss and/or damages on the back of this form and give this to the nearest claims office, and that failure to do so may result in my being paid a smaller amount on a claim.**

e. Telephone Number	f. Date Signed

g. Signature

15. ACKNOWLEDGMENT BY CARRIER'S/CONTRACTOR'S REPRESENTATIVE *(X and complete as applicable and sign below)*

☐ a. Property was delivered in apparently good condition except as otherwise noted above.

☐ b. I will initiate tracer action for missing items.

c. Name of delivering carrier/agent/contractor

d. Storage in transit? ☐ Yes ☐ No

e. Signature	f. Date Signed

DD Form 1840, JAN 88 *Previous editions are obsolete.* PAGE OF PAGES

SSJ/013

Figure 401-4. DD Form 1840, Joint Statement of Loss or Damage at Delivery

BEFORE USING - REVERSE CARBONS

NOTICE OF LOSS OR DAMAGE

INSTRUCTIONS TO MEMBER: You have up to 70 days to inspect your property and note all loss or damage. Should you find any loss or damage not reported on DD Form 1840 at the time of delivery, complete Section A below. Use only ball-point pen or typewriter. **THE COMPLETED FORM MUST BE DELIVERED TO YOUR LOCAL CLAIMS OFFICE NOT LATER THAN 70 DAYS FROM DATE OF DELIVERY. FAILURE TO DO SO MAY RESULT IN A REDUCTION OF THE AMOUNT PAYABLE ON YOUR CLAIM.** Keep a copy of this form for your records, receipted and dated by the claims office. If more than one page is needed, please number the pages.

SECTION A - *(To be completed by member)*

1. STATEMENT OF PROPERTY LOSS OR DAMAGE: You are hereby notified of the loss or damage in the following shipment of personal property.

a. Name of Member *(Last, First, Middle Initial)*	b. PPGBL/Order Number	c. Date of Delivery

d. Origin of Shipment *(City and State/Country)*	e. Destination of Shipment *(City and State/Country)*

f. You are further notified that property owner intends to present a claim for this loss and/or damage. You are hereby extended an opportunity to inspect the property.

2. LIST OF PROPERTY LOSS / DAMAGE *(NOTE: Tracer action is requested for items listed as missing)*

a. Inv. No.	b. Name of Item	c. General Description of Loss or Damage *(If missing, so indicate)*

SECTION B - *(To be completed by claims office)*
(NOTE: Mail original to home office of carrier/contractor listed in item 9 on DD Form 1840)

3. TO *(Home Office of Carrier/Contractor)*

a. Name and Address *(Street Address, City, State, and ZIP Code)*	b. Date of Dispatch

4. YOUR REPRESENTATIVE MAY CONTACT THIS CLAIMS OFFICE FOR ASSISTANCE

a. Name and Address of Claims Officer	b. Signature	
	c. Date Signed	d. Telephone Number

DD Form 1840R, JAN 88 *Previous editions are obsolete* PAGE OF PAGES

337.013

Figure 401-5. DD Form 1840R, Notice of Loss or Damage

PERSONAL PROPERTY COUNSELING CHECKLIST

PRIVACY ACT STATEMENT

AUTHORITY: 37 USC 406; 5 USC 5726; and E.O. 9397.

PRINCIPAL PURPOSE(S): Primary purpose is to ensure the member, dependent, and government employee has been briefed properly on the movement of their personal property within the Defense Transportation System. Information collected in this system may also be used in determining validity of claims for damage and improper shipments and any third party responsibility.

ROUTINE USE(S): Information contained in this system of records may be provided to a carrier, for the purpose of helping to resolve or adjudicate claims brought by Defense Transportation System users.

DISCLOSURE: Voluntary; however, failure to provide the requested information may delay settlement of a claim.

1. NAME *(Last, First, Middle Initial)*	2. SOCIAL SECURITY NUMBER	3. GRADE/RANK/RATING
4. ISSUING AUTHORITY	5. ORDER NUMBER AND PARAGRAPH	6. DATE *(YYYYMMDD)*

7. CHECKLIST *(Record special instructions on back)*

PART I - HOUSEHOLD GOODS

- (1) Entitlements under the order described above *(number of shipments, authorized destination, etc.)*
- (2) Weight allowances: PCS _____ TDY _____
- (3) Weight restriction at new duty station, if any.
- (4) Member's responsibility to reimburse the Government for any excess costs occasioned by this/these shipment(s).
- (5) Pickup date and required delivery date as determined by requirements of the member: PUD _____ RDD _____
- (6) Mode/method of shipment, including name of carrier if known.
- (7) Unauthorized items and disposal of useless items.
- (8) Professional books, papers, and equipment.
- (9) Member's responsibility to prepare and submit a complete DD Form 1701, Inventory of Household Goods.
- (10) Servicing/deservicing appliances.
- (11) Temporary storage *(contractual or intransit)*.
- (12) Checking inventory at origin and destination, noting discrepancies on reverse of PPGBL, DD Form 619, and carrier's inventory prior to signing and report them to ITO.
- (13) Checking DD Form 619 prepared by carrier at origin for complete accuracy of information recorded thereon.
- (14) Member's responsibility to sign delivery documents and release them to carrier immediately upon delivery of property and completion of delivery services and annotation of discrepancies.
- (15) Member's responsibility to contact the destination ITO immediately upon arrival to give a point of contact for the ITO when property arrives.
- (16) Member's responsibility to contact origin and destination ITOs if there is any change in orders or there are other factors that could affect delivery of the shipment.
- (17) Extra pickup or delivery charges, when applicable.
- (18) Procedure to designate agent to release property or accept property in absence of member and use of Power of Attorney or informal letter of authority.
- (19) What documentation given to member and its importance to him.
- (20) Member's responsibility to complete and turn in quality control form.
- (21) Member's responsibility to ensure PP items are free of soil/pest infestation.

PART II - UNACCOMPANIED BAGGAGE

- (1) Included as part of HHG weight allowance when shipped at Government expense.
- (2) Weight allowances: Member _____ Dependents _____
- (3) What can be shipped as unaccompanied baggage.
- (4) Pickup and delivery dates.
- (5) Preparation - Copy of Orders in each container just before closing it.
- (6) How and by whom shipped.

PART II - UNACCOMPANIED BAGGAGE *(Continued)*

- (7) Items of extraordinary value.
- (8) Whom to contact in the event of loss or damage.
- (9) VIP - Very Important Papers *(the importance of documentation)*.
- (10) Member's responsibility to complete and turn in quality control form.
- (11) Member's responsibility to reimburse the Government for any excess costs occasioned by this/these shipment(s).
- (12) Unauthorized items and disposal of useless items.
- (13) Professional books, papers, and equipment.
- (14) Member's responsibility to contact the destination ITO immediately upon arrival to give a point of contact for the ITO when property arrives.
- (15) Procedure to designate agent to release property or accept property in absence of member and use of Power of Attorney or informal letter of authority.

PART III - NONTEMPORARY STORAGE

- (1) Entitlements under this order, special services, etc.
- (2) Included as part of HHG weight allowance when stored at Government expense.
- (3) Where stored and for how long.
- (4) Pickup date.
- (5) Appliance servicing.
- (6) Checking inventory at time of pickup.
- (7) What documentation given to member and its importance to him.
- (8) Items of extraordinary value, excess weight/cost.
- (9) Member's responsibility to reimburse the Government for any excess costs occasioned by this/these shipment(s).
- (10) Unauthorized items and disposal of useless items.
- (11) Professional books, papers and equipment.
- (12) Member's responsibility to contact the destination ITO immediately upon arrival to give a point of contact for the ITO when property arrives.
- (13) Procedure to designate agent to release property or accept property in absence of member and use of Power of Attorney or informal letter of authority.

PART IV - HOUSE TRAILERS/MOBILE HOMES

- (1) Entitlements under this order, limitations, possible costs.
- (2) Services authorized at Government expense and those billed to member.
- (3) Responsibility of member to get trailer ready for movement.
- (4) Inventory and contents of trailer. Items that cannot remain in trailer.
- (5) Pickup and delivery dates.
- (6) Intransit storage and probability of excess costs.
- (7) Carrier and Government liability.
- (8) What documentation given to member and its importance to him.
- (9) Responsibility to promptly submit quality control information.

DD FORM 1797, SEP 1998 (EG) PREVIOUS EDITION IS OBSOLETE. WHS/DIOR, Oct 98

Figure 401-6. DD Form 1797, Personal Property Counseling Checklist

7. CHECKLIST *(Continued)*

PART V - PRIVATELY OWNED VEHICLES (POV)	PART VI - WEAPONS AND AMMUNITION
(1) Does vehicle qualify as a POV.	(1) Limitations and restrictions of country to which assigned.
(2) Authorizations, restrictions, special Host Government requirements.	(2) US Government requirements and restrictions applicable for import.
(3) Applicable port of embarkation and debarkation; alternates if needed.	(3) Special forms and procedures; responsibilities of carriers, etc.
(4) Preparation of POV prior to delivery to port.	**PART VII - LIABILITY, CLAIMS, PROTECTION**
(5) Application and other documents required. Power of Attorney if	(1) Carrier, storage firm and Government liability for loss or damage.
(6) Excess costs, when applicable; oversize; excess distance.	(2) Carrier and Government liability for mobile home. Liability for repairs enroute.
(7) Checking inventory of items left in POV; origin and destination.	
(8) Secure lien holder's permission if required.	(3) Carrier and Government liability for POV.
(9) Responsibility to provide Port of Debarkation proper address where notification of arrival can be sent; period POV can remain at port.	(4) Limitations on Government liability.
	(5) Importance of documentation - accurate inventory exception on delivery, etc.
(10) Joint inspection of POV at time of delivery and pickup.	
(11) Licensing and insurance requirements of state or overseas country.	(6) Valuation of items of extraordinary value - substantial value.
(12) Foreign manufactured POVs.	(7) Whom to see at destination in the event of loss or damage.
(13) Delivery of POV to port by agent; special requirements for.	

8. SPECIAL INSTRUCTIONS

9. CONFIRMATION OF COUNSELING

I understand that if I elect to ship any household goods at Government expense to a designated location when the waiting period for any type of housing at or in the vicinity of the oversea duty station is less than 20 weeks (as determined by the oversea commander), all entitlement to further shipment of such property at government expense will be exhausted until such time as I receive subsequent PCS orders returning me to CONUS or assigning me to another oversea duty station.

a. I HAVE BEEN BRIEFED RELATIVE TO THE DISPOSITION OF MY PERSONAL PROPERTY AS FOLLOWS:

(X)	YES	NO	(X)	YES	NO
(1) HOUSEHOLD GOODS			(6) MOBILE HOMES *($150.00 limitation on repairs enroute)*		
(2) NONTEMPORARY STORAGE			(7) WEAPONS AND AMMUNITION		
(3) PRIVATELY OWNED VEHICLES			(8) I HAVE BEEN FURNISHED A COPY OF THE PERSONAL PROPERTY SHIPPING INFORMATION PAMPHLET.		
(4) LOSS AND DAMAGE					
(5) UNACCOMPANIED BAGGAGE					

b. SIGNATURE OF COUNSELOR	c. SIGNATURE OF MEMBER/DEPENDENT/AGENT	d. DATE *(YYYYMMDD)*

DD FORM 1797 (BACK), SEP 1998

Figure 401-6. DD Form 1797, Personal Property Counseling Checklist (Back) (Cont'd)

REQUEST/AUTHORIZATION FOR DOD CIVILIAN PERMANENT DUTY OR TEMPORARY CHANGE OF STATION (TCS) TRAVEL

(Reference: Joint Travel Regulations) (Read Privacy Act Statement on back before completing form.)

SECTION I - REQUEST FOR OFFICIAL TRAVEL

1. DATE *(YYYYMMDD)*
2. NAME *(Last, First, Middle)*
3. SOCIAL SECURITY NUMBER
4. NEW POSITION TITLE
5. GRADE OR RATING
6. RETIREMENT CODE *(Insert retirement code from Block 30 of employee's most recent SF-50. If unknown, employee should contact their servicing personnel office.)*
7. RELEASING OFFICIAL STATION AND LOCATION, OR ACTUAL RESIDENCE
8. NEW OFFICIAL STATION AND LOCATION, ACTUAL RESIDENCE OR ALTERNATE DESTINATION
9. REPORTING DATE AT NEW DUTY STATION *(YYYYMMDD)*
10. TRAVEL PURPOSE *(X one)*
    - [ ] BETWEEN OFFICIAL STATIONS
    - [ ] RENEWAL AGREEMENT
    - [ ] RETURN FROM OVERSEAS FOR SEPARATION
    - [ ] TEMPORARY CHANGE OF STATION
    - [ ] OTHER
11. TRANSPORTATION MODE *(X as applicable)*
    - [ ] GOVERNMENT
    - [ ] COMMERCIAL
    - [ ] POC
    - [ ] RAIL
    - [ ] AIR

    MILEAGE RATE: $ _____
12a. PER DIEM FOR EMPLOYEE *(X one)*
    - [ ] YES
    - [ ] NO

    b. PER DIEM FOR DEPENDENT(S) *(X)*
    - [ ] YES
    - [ ] NO
13a. ROUND TRIP TRAVEL FOR HOUSE-HUNTING *(X)*
    - [ ] YES [ ] ACTUAL EXPENSE
    - [ ] NO [ ] FIXED

    b. NUMBER OF DAYS *(Including travel)*
14a. TEMPORARY QUARTERS SUBSISTENCE EXPENSE *(X)*
    - [ ] YES [ ] ACTUAL EXPENSE
    - [ ] NO [ ] FIXED

    b. NUMBER OF DAYS AUTHORIZED
15a. HOUSEHOLD GOODS (HHG) SHIPMENT *(X)*
    - [ ] YES [ ] COMMUTED RATE
    - [ ] NO [ ] GOVERNMENT BILL OF LADING (GBL)

    b. NET WEIGHT AUTHORIZED
16. OTHER AUTHORIZED EXPENSES *(X as applicable)*
    - [ ] TEMPORARY STORAGE OF HHG
    - [ ] NONTEMPORARY STORAGE OF HHG
    - [ ] RELOCATION SERVICES
    - [ ] PROPERTY MANAGEMENT SERVICES
    - [ ] REAL ESTATE EXPENSES
    - [ ] UNEXPIRED LEASE
    - [ ] RELOCATION INCOME TAX ALLOWANCE
    - [ ] POV SHIPMENT
    - [ ] MISCELLANEOUS EXPENSES
    - [ ] TRAVEL ADVANCE AUTHORIZED *(Amount)* $ _____
17. DEPENDENT OVERSEAS TRAVEL *(X as applicable)*
    - [ ] CONCURRENT
    - [ ] DELAYED
    - [ ] EARLY RETURN
    - [ ] NOT AUTHORIZED
18a. DEPENDENT TRAVEL FROM *(Home Address)*
b. TO *(New PDS)*
19. DEPENDENTS

a. NAME *(Last, First, Middle Initial)*	b. RELATIONSHIP	c. DATE OF BIRTH *(YYYYMMDD)*

20. ESTIMATED COST

a. PER DIEM	b. TRAVEL	c. OTHER	d. TOTAL
$	$	$	$

21. TRANSPORTATION AGREEMENT SIGNED *(X one)*
    - [ ] YES
    - [ ] NO

    DATE SIGNED *(YYYYMMDD)*

SECTION II - AUTHORIZATION FOR OFFICIAL TRAVEL

22. ACCOUNTING CITATION
23. APPROVING OFFICIAL
    a. TITLE
    b. SIGNATURE
24. ORDER-ISSUING/AUTHENTICATING OFFICIAL
    a. TITLE
    b. SIGNATURE
    c. ORGANIZATION ADDRESS
25. TRAVEL ORDER NUMBER
26. DATE ISSUED *(YYYYMMDD)*

DD FORM 1614, JUN 2000 PREVIOUS EDITION IS OBSOLETE.

Figure 401-7. DD Form 1614, Request/Authorization for DOD Civilian Permanent Duty or Temporary Change of Station (TCS) Travel

PRIVACY ACT STATEMENT
(5 U.S.C. 552a)

AUTHORITY: 5 U.S.C. 5701, 5702; and E.O. 9397 (SSN).

PRINCIPAL PURPOSE(S): Used to issue transportation requests, bills of lading for household goods and automobiles, and as a supporting authorization for cash payment of travel allowances.

ROUTINE USE(S): In addition to being used by officials and employees of the applicant's Service in determining eligibility, the information contained herein may be provided to law enforcement personnel investigating those suspected of fraudulently obtaining allowances. Information also may be disclosed under certain circumstances to other Federal agencies, Members of Congress, State and local governments, and U.S. and State courts.

DISCLOSURE: Voluntary; however, failure to provide SSN may preclude timely consideration of your request.

SECTION III - ADMINISTRATIVE INFORMATION

27. CLAIMANT - FORWARD COMPLETED SETTLEMENT CLAIM TO THE FOLLOWING ADDRESS:
(Losing/Gaining Activity - provide the address to where the employee should submit this claim for final disbursement.)

28. REMARKS OR OTHER AUTHORIZATIONS *(Use this space for special requirements, leave, excess baggage, etc., or other authorization.)*

These orders may be amended by the gaining activity. Expenses/charges not allowed at Government expense are the financial responsibility of the employee concerned.

DD FORM 1614 (BACK), JUN 2000

Figure 401-7. DD Form 1614 (Back), Request/Authorization for DOD Civilian Permanent Duty or Temporary Change of Station (TCS) Travel (Cont'd)

REPORT OF CASUALTY		REPORT CONTROL SYMBOL DD-P&R(AR)1664
1. REPORT NUMBER	2. REPORT TYPE	3. DATE PREPARED

4. SERVICE IDENTIFICATION

a. NAME *(Last, First, Middle and Suffix)*	b. SOCIAL SECURITY NO.	c. GRADE/RANK/RATE	d. OCCUPATION CODE
e. COMPONENT	f. BRANCH	g. ORGANIZATION	

5. CASUALTY INFORMATION

a. TYPE	b. STATUS	c. CATEGORY	d. DATE OF CASUALTY	e. PLACE OF CASUALTY

f. CAUSE AND CIRCUMSTANCES

g. DUTY STATUS	h. FLIGHT STATUS	i. BODY RECOVERED

6. BACKGROUND INFORMATION

a. DATE OF BIRTH	b. PLACE OF BIRTH	c. COUNTRY OF CITIZENSHIP
d. RACE	e. ETHNIC GROUP / f. SEX	g. RELIGIOUS PREFERENCE

7. ACTIVE DUTY INFORMATION

a. PLACE OF ENTRY	b. DATE OF ENTRY	c. HOME OF RECORD AT TIME OF ENTRY
d. DATE TOUR COMMENCED	e. PRIOR SERVICE INFORMATION	f. RECORD OF EMERGENCY DATA FORM DATE

8. PAY INFORMATION

a. PAY GRADE	b. BASIC PAY	c. INCENTIVE/ADDITIONAL PAY *(State type)*

9. INTERESTED PERSONS *(Name, Address, and Relationship)*

10. REMARKS *(Continue on separate sheet, if necessary)*

FOOTNOTES FOR ITEMS 9 AND 10
1 Adult next of kin.
2 Beneficiary for gratuity pay in event there is no surviving spouse or child - as designated on record of emergency data.
3 Beneficiary for unpaid pay and allowances - as designated on record of emergency data.

11. REPORTING INFORMATION

a. COMMAND AGENCY	b. DATE RECEIVED	c. REPORT FOR VA TO FOLLOW

12. DISTRIBUTION	13. SIGNATURE ELEMENT
	NOTE: This form may be used to facilitate the cashing of bonds, the payment of commercial insurance, or in the settlement of any other claim in which proof of death is required.

DD FORM 1300, MAY 2000 PREVIOUS EDITION MAY BE USED.

Figure 401-8. DD Form 1300, Report of Casualty

UNITED KINGDOM (UK) CUSTOMS DECLARATION FOR THE IMPORTATION OF PERSONAL EFFECTS OF U.S. FORCES/CIVILIAN PERSONNEL ON DUTY IN THE UK

1. MEMBER		2. DATE PREPARED
a. TYPED OR PRINTED NAME *(Last, First, Middle Initial)*	b. RANK OR GRADE	*(YYYYMMDD)*
3. ORIGIN TRANSPORTATION OFFICE	4. UK DUTY STATION AND ORGANIZATION	

5. DECLARATIONS

Before completing this form, review PPCIG, Vol. II, General Instructions, United Kingdom and the listing of prohibited and restricted items on the reverse of this form.
(X the appropriate boxes below.)

WARNING: Severe penalties can be imposed for false declarations.

a. THIS IS A:

☐ HOUSEHOLD GOODS SHIPMENT
☐ UNACCOMPANIED BAGGAGE SHIPMENT

b. DOES THIS SHIPMENT CONTAIN WEAPONS OF ANY KIND?

☐ YES
☐ NO

IF YES, DETAIL ALL WEAPONS HERE.

c. DOES THIS SHIPMENT CONTAIN ANY ITEMS THAT FALL WITHIN THE LIST OF RESTRICTED ITEMS *(Listed on back)*?

☐ YES
☐ NO

IF YES, GIVE DETAILS HERE.

☐ d. X THIS BOX IF THIS SHIPMENT CONTAINS A MOTORCYCLE/MOPED

e. I, the undersigned, ordered to duty in the United Kingdom in service of U.S. Forces, hereby declare that the goods imported into the UK are my personal property and are for myself and my family only. In consideration of the fact that the goods are being accorded admission free of customs charges, I agree not to dispose of them to non-members of the U.S. Forces while I remain in the United Kingdom. I have been fully briefed on the completion of DD Form 1434 and have read the notes on the reverse of this form. The declarations made by me are to the best of my knowledge true and correct.

(1) TYPED OR PRINTED NAME *(Last, First, Middle Initial)*	(2) RANK OR GRADE	(3) SIGNATURE

DD FORM 1434, FEB 2002 PREVIOUS EDITION IS OBSOLETE.

Reset

Figure 401-9. DD Form 1434, United Kingdom (UK) Customs Declaration for the Importation of Personal Effects of US Forces/Civilian Personnel on Duty in the UK

PROHIBITED ITEMS:

These items cannot be shipped into the UK. Do not include these items in your shipment.

a. Controlled Drugs - includes opium, heroin, morphine, cocaine, cannabis, amphetamines, and lysergic acid (LSD).

b. Weapons - Licenses are not obtainable for these weapons in the UK (see PPCIG, Vol. II, General Instructions - United Kingdom for permitted firearms). All prohibited weapons are seized and destroyed by Her Majesty's Customs and Excise (HMCE) officials. Prohibited weapons include:
(1) Mace and tear gas.
(2) Flick (switchblade) knives, butterfly knives, sword sticks, knuckle dusters, telescopic truncheons and some types of martial arts equipment.
(3) All handguns (pistols/revolvers). NOTE: Possession of handguns is an offense punishable by a lengthy prison sentence.
(4) Burst fire weapons (includes fully automatic firearms).
(5) Self-loading (includes semi-automatic firearms).
(6) Pump action rifles (except those chambered for .22 RIM fire ammunition).
(7) Repeating shotguns with a barrel less than 24 inches or overall length less than 40 inches (combat type shotguns).
(8) Any firearm disguised as another object (e.g., walking stick or umbrella shotguns, air canes, pen pistols, and belt buckle pistols).
(9) Stun guns.

c. Ammunition and explosives; includes fireworks.

d. Meat, poultry, and animal products (whether cooked or not), including ham, bacon, sausage pate, eggs and milk.

e. Plants, parts thereof, and plant produce including trees and shrubs, potatoes, and certain other vegetables, fruit, bulbs, and seeds.

f. Counterfeit coins and bank notes.

g. Sexually explicit material - prohibited material portrays scenes of explicit sexual activity (i.e. anal fisting, bestiality, bondage, coprophilia, defecation, enemas (use of), fisting, insertion of an object, masochism, necrophilia, pedophilia, sadism, sado-masochism, scatphagy, urolangnia, and vaginal fisting). In addition, prohibited material includes anything consisting of indecent photographs of children under 16, and scenes of excessive violence toward people or animals. The restriction applies to all mediums (videotapes, magazines, cinematographic films, computer disks, CD ROM, laser disk, etc.).

h. Material depicting violence - This must be visually explicit to bring it within the prohibition. Shipments containing articles portraying excessive violence against humans and animals such as scenes of decapitation, excision of limbs, gouging of eyes, cannibalism, garroting, torture, and dog fighting may not be imported. In general terms, scenes of mutilation are considered to fall within the prohibition. In particular, graphic scenes of violence against women also fall within the scope. Comparisons should not be made with scenes shown at the movie theater. The criteria applied to films for presentation in movie theaters is not as strict as for video material where access by children cannot be effectively controlled. The restriction applies to all mediums (video tapes, magazines, cinematographic films, computer disk, CD ROM, laser disk, etc.).

i. Radio transmitters.

RESTRICTED ITEMS:

These items should not be shipped without consulting the appropriate UK agency listed in the PPCIG General Instruction pages, or HQ 3AF/LGTT for further details.

a. All firearms not listed in the prohibited category (see PPCIG, Vol. II, General Instructions, United Kingdom.

b. Gas pistols, BB pistols, and similar weapons.

c. Wood with bark attached.

d. Most animal and bird articles derived from rare species whether alive or dead (stuffed), including fur skins, ivory, reptile leather, and goods made from them.

e. Wildlife trophies - (deer antlers, moose racks, elk horns, etc.). Prior to shipment of these items in the restricted category personnel should contact the Department of Environment, Wildlife Conservation, Licensing Section, Tollgate House, Houlton Street, Bristol BS2 9DJ, United Kingdom, for permission to import these items. Failure to do so could delay clearance of the shipment on arrival. (NOTE: the term stuffed animals in the UK means wildlife trophies. Ensure the carrier annotates stuffed toys on the inventory as stuffed toys instead of stuffed animals to avoid shipment being delayed while UK customs inspect the items).

To obtain further information on prohibited or restricted items, please write HMCE, Alexandra Dock, Kings Lynn, Norfolk PE30 2ET, United Kingdom, or fax 011-44-1553-767140.

DD FORM 1434 (BACK), FEB 2002

Figure 401-9. DD Form 1434, United Kingdom (UK) Customs Declaration for the Importation of Personal Effects of US Forces/Civilian Personnel on Duty in the UK (Back)

US CUSTOMS DECLARATION FOR PERSONAL PROPERTY SHIPMENTS	*WARNING:* Any false statement or willful omission herein subjects the shipment to seizure and forfeiture or any person involved to a penalty equal to its value as well as to criminal prosecution.	CUSTOMS DECLARATION NUMBER

DATA REQUIRED BY THE PRIVACY ACT OF 1974

AUTHORITY: 19 U.S.C. 1498

PRINCIPAL PURPOSE: To declare shipments of household goods, unaccompanied baggage, and privately owned vehicles for which free entry is claimed. Section A - Owner customs declaration for type of shipment and reason for shipment. Section B - Military Customs Inspector certifies that property has been inspected/examined and provides customs Inspector's stamp.

ROUTINE USES: (1) Use of your Social Security Number is proof of identification that person processing through Customs is not an impostor and also assists in criminal prosecution if contraband or undeclared articles, for which Customs fees are due, are found in shipment. (2) Origin transportation officer and military customs inspector retain copies as proof that shipment has been properly processed. Copies are destroyed when no longer required.

DISCLOSURE: DISCLOSURE OF YOUR SSN IS VOLUNTARY. HOWEVER, FAILURE TO PROVIDE YOUR SSN AND OTHER REQUESTED PERSONAL INFORMATION MAY CAUSE DELAY IN PROCESSING THROUGH CUSTOMS, PENDING POSITIVE IDENTIFICATION.

PART 1 - HOUSEHOLD GOODS, UNACCOMPANIED BAGGAGE, AND PRIVATELY OWNED VEHICLES

TO: *(Overseas POE/APOE)*	FROM: *(Military customs inspector)*

SECTION A - OWNER'S CUSTOMS DECLARATION

LAST NAME - FIRST NAME - MIDDLE INITIAL *(Print or type)*	GRADE	SOCIAL SECURITY NUMBER

UNIT ADDRESS OVERSEAS *(Include APO number)*	ADDRESS IN US *(Include ZIP Code)*

1. DECLARATION FOR: *(Indicate by check of appropriate item) (Attach copy of orders)*

☐ **HOUSEHOLD GOODS** ☐ **UNACCOMPANIED BAGGAGE** ☐ **PRIVATELY OWNED VEHICLE**

2. I DECLARE THAT: (1) All items in this shipment to the United States consist only of personal property for my personal use or the use of members of my family who have been residing with me; (2) The shipment contains no prohibited items; (3) Any articles which are (a) Restricted or (b) In excess of the quantities entitled to free entry under the law and regulations thereunder are listed and identified as such in the remarks space below *(with the cost or fair value, if not obtained by purchase, given for those not entitled to free entry)* or if there are none, I have written the words "No Exceptions," in that space; (4) None of the items is to be taken or shipped to the United States as an accommodation for others or for sale, barter, or exchange; (5) This declaration is made for me and for *(State number)* _____ members of my family; (6) Total quantities of alcohol beverages and cigars included in this and other sets of customs declaration forms: Alcohol beverages *(State number)* _____ Cigars *(State number)* _____ ; and (7) I have been serving overseas under competent US Government orders and was: *(Check appropriate item below)*

	a. Assigned to permanent duty overseas
	b. Required to perform temporary duty overseas for 140 days or more
	c. Assigned to temporary duty overseas under orders which intended the duration to be 140 days or more
	d. Directed from one overseas duty station to another overseas duty station and return of my personal property to the United States has been approved as indicated in supplemental instructions to orders
	e. Directed to evacuate myself, family, or personal property to the United States
	f. Directed to ship personal property in advance of the issuance of travel orders

THE STATEMENTS ABOVE ARE MADE WITH FULL KNOWLEDGE OF THE APPLICABLE PROVISIONS OF DOD REGULATIONS 5030.49R AND OVERSEAS INSTRUCTIONS

DATE	SIGNATURE OF OWNER

SECTION B - MILITARY CUSTOMS INSPECTOR'S CERTIFICATE

I CERTIFY THAT: (1) I have ☐ inspected ☐ examined the personal property in *(State number)* _____ outer container(s) or vehicle covered by this certificate and have read the above statements which, to the best of my knowledge and belief, are true; (2) No unauthorized Government property is contained in the shipment; (3) Regulations relative to quantities, disinfestation, keys, labeling, or tagging, and certificates have been complied with; and (4) the property in the shipment is being forwarded to the United States pursuant to competent US Government orders which I have examined and the correct item namely a, b, c, d, e, or f is checked above. Serial numbers of seal(s) *(Give numbers)* _____ affixed to container(s).

MILITARY CUSTOMS INSPECTOR'S STAMP	LAST NAME - FIRST NAME - MIDDLE INITIAL	GRADE
	SIGNATURE OF MILITARY CUSTOMS INSPECTOR	DATE

REMARKS *(Indicate (a) Reason for absence of owner's signature if not shown. (b) Kind, quantity and disposition of articles withdrawn from shipment. (c) Prohibited, restricted or apparently dutiable articles remaining in shipment and location (container number): ALSO, draw a diagonal red line across face of form.)*	*THIS COLUMN IS FOR USE OF US CUSTOMS OFFICERS ONLY*

SECTION C - OVERSEAS PORT SHIPMENT DATA

NAME OF CARRIER	VOYAGE OR FLIGHT NO.

DD Form 1252, APR 77 (EG) **REPLACES DD FORM 1252, 1 OCT 72, AND DD FORM 1252 (PAS), 26 SEP 75, WHICH ARE OBSOLETE**

Designed using Perform Pro, WHS/DIOR, Sep 94

Figure 401-10. DD Form 1252, US Customs Declaration for Personal Property Shipments

US CUSTOMS DECLARATION FOR PERSONAL PROPERTY SHIPMENTS	WARNING: Any false statement or willful omission herein subjects the shipment to seizure and forfeiture or any person involved to a penalty equal to its value as well as to criminal prosecution.	CUSTOMS DECLARATION NO. *(For Issuing Office Use)*

DATA REQUIRED BY THE PRIVACY ACT OF 1974

AUTHORITY: 19 U.S.C. 1498.

PRINCIPAL PURPOSE: To declare shipments of household goods, unaccompanied baggage, and privately owned vehicles for which free entry is claimed. Section A Owner customs delcaration for type of shipment and reason for shipment. Section B - Military Customs Inspector certifies that property has been inspected/examined and provides Customs Inspector's stamp.

ROUTINE USES: (1) Use of your Social Security Number is proof of identification that person processing through Customs is not an impostor and also assists in criminal prosecution if contraband or undeclared articles, for which Customs fees are due, are found in shipment. (2) Origin transportation officer and military customs inspector retain copies as proof that shipment has been properly processed. Copies are destroyed when no longer required.

DISCLOSED: DISCLOSURE OF YOUR SSN IS VOLUNTARY. HOWEVER, FAILURE TO PROVIDE YOUR SSN AND OTHER REQUESTED PERSONAL INFORMATION MAY CAUSE DELAY IN PROCESSING THROUGH CUSTOMS, PENDING POSITIVE IDENTIFICATION.

PART II - FIREARMS AND AMMUNITION

TO: *(Overseas POE/APOE)*	**FROM:** *(Military customs inspector)*

SECTION D - OWNERS CUSTOMS DECLARATION *(Attach copy of orders)*

LAST NAME - FIRST NAME - MIDDLE INITIAL *(Print or type)*	GRADE	SOCIAL SECURITY NUMBER
UNIT ADDRESS OVERSEAS *(Include APO number)*	ADDRESS IN UNITED STATES *(Include ZIP Code)*	

1. I DECLARE THAT: (1) All items in this shipment to the United States consist only of privately owned firearms and ammunition for my personal use; (2) The shipment contains (a) No surplus military firearm except as indicated in 2 below (b) No prohibited firearm (c) The firearms are generally recognized as particularly suitable for sporting purposes as determined by the Department of Treasury or as indicated in 2 below. I ☐ have ☐ have not been serving overseas under US Government orders and am traveling under orders for *(or to): (Check appropriate item below)*

	a. TDY or PCS to the United States or enroute to another oversea duty station
	b. PCS to the United States from Overseas
	c. PCS from overseas to a restricted oversea area where firearms are prohibited and personal property is being returned to the US
	d. PCS to the US from a permanent duty station abroad to a permanent duty station in the United States or for release from active duty *(separation or retirement)*
	e. PCS from a combat area or a combat zone to the United States
	f. TDY to the United States from overseas
	g. TDY or PCS to the United States from overseas

COMPLETE APPROPRIATE CERTIFICATE OR DECLARATION BELOW

2. DECLARATION CONCERNING IMPORTATION OF FIREARMS OR AMMUNITION PREVIOUSLY TAKEN OUT OF THE UNITED STATES

Under penalty of perjury I hereby declare that my present address is _____

and that I departed from the United States *(Including possessions thereof)* at _____ *(Place of exit)*

on or about _____ *(Date)* and took with me as part of my personal property, the firearm(s) and ammunition which I previously possessed in the United States. Indicate as code "A" in description below.

3. CERTIFICATION UNDER REVENUE RULING 69-309 *(Applicable for Rifles/Shotguns/Ammunition when qualified. See provisions on reverse.)*

Under the penalties of perjury I hereby declare that I now am or have been on active duty outside the United States within 60 days immediately preceding this importation; that I am returning to the United States from a permanent overseas duty station; that the transportation to and the receipt and possession by me at my place of residence or new permanent duty station located at

_____ *(City)* _____ *(State)*

of the firearm(s) and/or ammunition described on the attached ATF Form 6A *(Firearms)* would not constitute any violation of Title I, State Firearms Control Assistance *(U.S.C., Title 18, Chapter 44)*, or Title VII, Unlawful Possession or Receipt of Firearms *(82 Stat. 236)* of the Omnibus Crime Control and Safe Streets Act of 1968 *(82 Stat. 197)* or Section 414 of the Mutual Security Act of 1954 *(78 Stat. 848)* or any applicable state law or published ordinance. *(A Release and Receipt of Imported Firearms (ATF Form 6A) (Firearms) will be attached).* Indicate as code "B" in description below.

4. FIREARMS OR AMMUNITION ACQUIRED DIRECTLY FROM A LICENSED US FIREARMS DEALER OR THROUGH AN AUTHORIZED ROD AND GUN CLUB OR THROUGH MILITARY EXCHANGE SERVICES SPECIFICALLY FOR THE MEMBER. Indicate as code "C" in description below. Evidence of such acquisitions will be attached.

5. FIREARMS OR AMMUNITION ACQUIRED OVERSEAS OTHER THAN AS INDICATED IN 3 OR 4 ABOVE. An approved Import Permit *(ATF Form 6) (Firearms)* Part II and Release and Receipt of Imported Firearms *(ATF Form 6A) (Firearms)* should be attached if available. If not, indicate as code "D" in description below.

6. DESCRIPTION OF FIREARMS OR AMMUNITION *(List additional firearms/ammunition in Remarks, on reverse)*

a. FIREARMS

ITEM	CODE	MANUFACTURER	COUNTRY OF MANUFACTURE	CALIBER SIZE OR GAUGE	MODEL	SERIAL NUMBER
(1)						
(2)						
(3)						
(4)						
(5)						
(6)						
(7)						

b. AMMUNITION

ITEM	CODE	TYPE	QUANTITY	CALIBER
(1)				
(2)				
(3)				
(4)				
(5)				
(6)				

THE STATEMENTS ABOVE ARE MADE WITH FULL KNOWLEDGE OF THE APPLICABLE PROVISIONS OF DOD REGULATION 5030.49R AND OVERSEAS INSTRUCTIONS

SIGNATURE OF OWNER	DATE

DD Form 1252-1, APR 77 (EG) REPLACES DD FORM 1252-1, 1 OCT 72 AND DD FORM 1252-1 (PAS), 26 SEP 75, WHICH ARE OBSOLETE.

Designed using Perform Pro, WHS/DIOR, Sep 94

Figure 401-11. DD Form 1252-1, US Customs Declaration for Personal Property Shipments

- Agriculture Inspection Certificate -

(USEUCOM Regulation 30-3)

Print Name (Last, First, MI)	
Place inspected:	Date:
Check type of shipment: _____HHG _____UB	GBL # (Entered by TO)

CERTIFICATE OF SELF-INSPECTION: I have reviewed USDA publication "Don't Bring Home a Bug" (Program Aid #1525) and I (will inspect) (have inspected) all outdoor household articles as required by USDA regulation 7 CFR Ch 111, 330.105. I (will make) (have made) a diligent examination of the articles and certify they are free of any agriculture concerns such as: gypsy moth life forms, snails, soil, weeds, seeds, or insects. Additionally, I certify I am not shipping fresh fruits or vegetables, live plants, plant parts, animal or bird parts, or meat or meat by-products unless commercially manufactured, cooked in its own juices and hermetically sealed.

_____
Shipper's signature

Military Preinspection Certification Stamp

Remarks:

USEUCOM Form 30-3(R)
1 Jan 96 This form supersedes USEUCOM Form 30-3 dated 1 Oct 94

Figure 401-12. USEUCOM Form 30-3R, Agriculture Inspection Certificate

CHAPTER 402

HOUSEHOLD GOODS AND UNACCOMPANIED BAGGAGE

A. PURPOSE

This Chapter provides guidance and establishes procedures for the worldwide shipment of HHG and UB.

B. CARRIER PARTICIPATION IN DOD TGBL TRAFFIC

1. To participate in TGBL HHG or UB traffic, the carrier must meet, or exceed, all requirements of the TOS in Appendix B of this Regulation, MTMC Pamphlet 55-4, How to do Business in the DOD Personal Property Program, and the rate solicitation. Any questions concerning the MTMC Pamphlet 55-4 or the rate solicitation should be directed to HQ MTMC/MTPP-HQ, Commercial: 703 428-2982.

2. Carriers interested in participating in the DOD Personal Property Program should contact: HQ MTMC, Hoffman Building II, 200 Stovall Street, Alexandria, VA 22332-5000 (Attn: MTPP-HQ).

C. EQUAL OPPORTUNITY TO COMPETE

1. All carriers qualified to participate in the movement of DOD-sponsored personal property shipments must be given an equal opportunity to compete. The extent a qualified carrier will participate in DOD traffic depends on the following:

a. The geographic areas served by the carrier.

b. The capability of the carrier's agent's facilities and equipment.

c. The carrier's ability to meet the member's/employee's requirements.

d. The quality of the carrier's performance on previous shipments.

D. TO ACTIONS

1. Areas of Operation.

a. The TO must establish and announce areas of operation within their installation's AOR.

b. Shipments must be offered only to those carriers qualified to serve that AOR; however, carriers may use approved agents outside the TO's AOR when it is in the best interest of the member/employee and the Government.

2. Establishment of RDDs.

a. During the counseling session, the TO must determine the member's/employee's requirements and assist the member/employee in establishing a realistic RDD. Saturdays, Sundays, and holidays are counted as part of the transit time. However, the RDD must not be on a weekend or a holiday.

b. When assigning a transit time less than published (See Appendixes L, M, and N), the TO must advise the origin agent of this at the time of booking and offer the agent the opportunity to accept or refuse the shipment. To support this action, the counselor must annotate/flag the origin shipping file to indicate the shipment RDD is less than the minimum. The Tonnage Distribution Report (TDR) booking clerk will annotate the TDR. A carrier refusing to accept the shipment will not be charged with a refusal nor assessed administrative tonnage. Any carrier who accepts a lesser transit time will be expected to satisfy that requirement. A member/employee requesting a transit time, less than the minimum standard, should provide rationale for a lesser transit time prior to booking.

c. If, after establishment of the RDD and before the pickup of the shipment, the carrier or TO learns the member's/employee's needs have changed, the TO, with the approval of both the member/employee and the carrier, may establish a new RDD. If the carrier cannot, or will not, accept the revised RDD, the TO may reallocate the shipment to another carrier.

d. For shipments moving as Deferred Air Freight Code T (TP-4), the RDD must be constructed based on the surface transit time for Code 4.

3. Establishment of a RPDD for Code J and DPM UB Shipments.

a. TOPS will assign a RPDD and print it on the BL.

b. For Code J UB shipments, the carrier/agent must provide the actual weight and cube of each shipment, within three working days after pickup. The TO/PPSO must then enter the actual weight and cube into TOPS within one working day after receipt from the local agent.

c. For DPM UB shipments, the contractor must provide the TO/PPSO the actual pieces, weight, and cube prior to the BL being printed and provided to the contractor or carrier. It is imperative that the contractor provides the required information to the TO/PPSO within one working day after pickup.

d. The selected Code J/DPM port agent/carrier/contractor is responsible for delivering each shipment to the assigned AMC aerial port on the RPDD assigned.

e. If the RPDD does not print on the BL, the TO must compute the RPDD using the formula in Chapter 413, Paragraph D.1.r.(2)(c) (for DPM) or Paragraph D.1.y.(16)(a) (for Code J) and annotate the date in Block 18 for DPM and Block 25 for Code J on the BL.

E. SELECTION OF METHOD AND MODE OF SHIPMENT

When the method and mode of shipment have been determined, the shipment must be tendered IAW the Total Quality Assurance Program (TQAP). When the PPCIG determines a shipment should move by DPM, or DPM is only method available to satisfy the

member/employee, the provisions of Chapter 404 of this Regulation apply. When the TO determines that movement by air is necessary to meet the member's/employee's requirements, the following apply:

1. Army-Sponsored Shipments. For Army-sponsored air shipments, the provisions of Army Regulation (AR) 55-71, Transportation of Personal Property and Related Services, apply.

2. Air Force-Sponsored Shipments. The provisions of Air Force Policy Directive (AFPD) 24-5, Transporting and Storing Personal Property, apply. All requests for TP-2 airlift to/from other than hard-lift areas will be routed through the Major Command to JPPSO-SAT FT SAM HOUSTON TX/DIR. Advance Transportation Control and Movement Document (ATCMD) clearance documents to the shipper service control office (SSCO) or overseas area clearance authority (ACA) for TP-2 shipments, to and from other than hard-lift areas, must include a TH-9 trailer card identifying the airlift approval authority (i.e., JPPSO-SAT/DIR 123456Z Dec 01).

3. Navy-Sponsored Shipments. For Navy-sponsored air shipments, the provisions of Naval Supply Systems Command (NAVSUP) Publication (Pub) 490, Transportation of Personal Property, apply. All requests for TP-2 airlift to/from other than hard-lift areas will be routed through NAVSUP HHG DIV.

4. Marine Corps-Sponsored Shipments. For Marine Corps-sponsored air shipments, the Marine Corps policy concerning air shipments of HHGs and UB is contained in Marine Corps Order (MCO) P4600.39, Marine Corps Personal Property Transportation Manual, Paragraph 3204.

5. Coast Guard-Sponsored Shipments. Coast Guard policy concerning air shipments of HHGs and UB is contained in Commandant Instruction (COMDTINST) M4050.6, Coast Guard Personal Property Transportation Manual, Paragraphs 2001 and 2003.

F. SHIPMENT OF UB BY MAIL OR SMALL PACKAGE SERVICE

1. The TO is authorized to ship UB by parcel post, air mail, military official mail, surface mail, or small package service. Shipment must be made only when it is the cost-effective method consistent with the member's/employee's requirements. Baggage must meet the specifications of the US Postal Service or small package carrier.

2. The TO must maintain records of UB shipments using DD Form 1299, Application for Shipment and/or Storage of Personal Property, (Figure 401-1). One copy of the DD Form 1299 must be provided to the member/employee at origin. The Government will not pay the cost of insurance. A second copy of the DD Form 1299, annotated to show the number of pieces, weight, and date shipped, together with a copy of the member's/employee's orders, must be forwarded to the destination TO.

3. It is important that the member/employee be provided a copy of the DD Form 1299 as a receipt for property shipped. A copy of the member's/employee's orders must be placed inside each piece of UB shipped.

G. RECEIPT FOR UB

When a member/employee delivers UB to the TO for shipment, the TO may prepare a DD Form 1796, Receipt for Unaccompanied Baggage, (Figure 402-1), (using original plus one copy). TOs will provide the member/employee with the original DD Form 1796 and the copy will be retained by the origin TO. Local reproduction of DD Form 1796 is authorized.

H. RETROGRADE PERSONAL PROPERTY WITHOUT FINAL CONUS DESTINATION

1. When the member/employee cannot provide a final CONUS destination for a shipment, the TO must annotate the DD Form 1299, Block 10: "Hold for Further Disposition Instructions," on shipment markings and documentation. These shipments may be moved in Government-owned containers and consigned to storage utilizing the most cost-effective method.

2. The origin TO/contractor must annotate the member's/employee's permanent contact address on the advance shipping documents provided to the TO responsible for the storage location. The member/employee must be directed to provide the final destination address directly to the TO, once the final destination has been established.

I. PORT SELECTION FOR CODE 5 SHIPMENTS

Code 5 shipments do not require export traffic releases (ETRs). Shipments must be routed to military terminals designated by this Regulation, Part II, Cargo Movement, Appendix CC-5.

J. ITGBL SHIPMENTS ENTERING THE DTS

1. The TO will assign a Transportation Control Number (TCN) to each ITGBL personal property shipment entering the DTS.

2. An ATCMD must be prepared for all ITGBL Code 5/T HHGs shipments IAW this Regulation, Part II, Cargo Movement. An ATCMD will not be prepared for Code J UB shipments for shipment clearance purposes. TCMD data is required to be provided to the aerial port by the port agent on a computer disk for Code J shipments.

3. After the TCMD is assembled, the TO must offer the shipment for clearance. A clearance is required on all Code 5/T shipments. A clearance is not required on Code J shipments. The TO clears a personal property shipment by sending ATCMD data to the appropriate clearance authority. The TO may estimate the pieces, weight, and cube on the ATCMD submitted to the SSCO or clearance authority in situations when obtaining actual data would delay transmission of TCMD data beyond the specified clearance time frame. A good gross weight estimate can be obtained by adding 40 percent to the estimated weight. Cubic measurement can be obtained by multiplying .015 (lbs) times the gross estimated weight.

4. Personal property shipments are considered cleared if the clearance authority has not challenged them by the hour/day entered in the ATCMD date shipped field. The only exception is for shipments by TP-4. For shipments moving by TP-4, the shipper will submit the ATCMD

data to the ACA as for any other shipment. Unlike other air shipments, a TP-4 shipment must not be released to an ITGBL carrier until specifically approved by the ACA.

5. The TO must provide the origin carrier with three copies of the TCMD. The carrier must be instructed to:

a. Insert the actual pieces, weight, and cube of the shipment on the TCMD.

b. Place one copy, together with a copy of DD Form 1299 and a copy of the member's/employee's orders, in the waterproof pouch on the Number 1 container of the shipment.

c. Surrender one copy to the military ocean or air terminal at the time of delivery. This copy is not required at CONUS AMC air terminals for CONUS outbound shipments that have been cleared by the SSCO or clearance authority.

d. Retain one copy for the carrier's files.

6. For Code J shipments, the RPDD must appear in Block 25 of the Government Bill of Lading (GBL).

7. Upon receipt of the actual weight/cube information, the TO will input the actual weight/cube data into TOPS within one working day. The origin TOPS site transmits the shipment data to Advance Shipping Notice (ASN). (TOPS provides shipment data to ASN for purposes of producing a daily weight and cube prediction report for AMC to use to schedule airlift).

K. CARRIER RESPONSIBILITIES AFTER APPROVAL BY HQ MTMC

1. Submission of LOI. A carrier approved by HQ MTMC must submit a LOI, containing pertinent information prescribed in Appendix A, to the TO of each activity where participation in DOD traffic is desired. After initial acceptance of a valid LOI by the TO, the LOI will remain on file until replaced with another LOI or invalidated by the TO. The TO will require a replacement LOI only when information provided by the carrier on the LOI has changed.

a. CONUS. The carrier's LOI must identify enclosures as Enclosure 1, Map Reflecting Domestic Operating Authority and Enclosure 2, The Name(s) of Interlining Carriers Used Within CONUS or Areas Served by Use of Such Carriers Through Joint Carriage Arrangements. The carrier, by submission of an LOI filed at TOs within CONUS, certifies that an agency agreement is in effect between the carrier and the agents listed therein. A valid LOI must be filed with and accepted by the TO before rates can be filed with HQ MTMC.

b. Overseas. When requested by the TO, a carrier filing an LOI in a controlled country must submit a Certificate of Agency Agreement (CAA) signed by an authorized representative of their company and the overseas agent. A valid LOI must be filed with the TO not later than the initial filing deadline specified in the ITGBL traffic management and rate procedures. Prior to filing rates, a carrier must have a valid LOI on file at each TO within the rate area for which rates are filed. LOIs filed at installations that cover more than one rate area must indicate whether the

service will be for "all" of the TO's area or specifically indicate which area to be served. The LOI must have been accepted by the initial filing date of that particular cycle. LOIs filed at installations that service more than one rate area do not require coverage of all rate areas within the TO's AOR. For example, a carrier wanting to serve US88 (California-South) must also file a LOI at Marine Corps Air Station, Yuma, Arizona (AZ), to cover Winterhaven, California. However, the LOI at Yuma does not have to cover AZ if the carrier does not wish to serve US79 (AZ).

2. Verification of LOI (CONUS/Overseas). The LOI must have been accepted and retained on file by the initial filing deadline date of that particular cycle. At the time of LOI verification, TOs will take the following action if the carrier does not have an LOI on file:

a. Deny that carrier traffic.

b. Advise the carrier's home office that there is no record of an accepted LOI and inform the carrier it has seven calendar days to provide proof of an accepted LOI. The carrier's response must include the date the LOI was submitted, date accepted and by whom, and the name of the local agent.

c. Notify MTPP-HQ by message or fax if the carrier cannot prove within the seven day time frame that it has a valid LOI on file.

3. Withdrawal of LOI. If a LOI is withdrawn, the TO must immediately notify HQ MTMC (MTPP-HQ) and/or overseas component by message if a carrier withdraws a previously accepted LOI. The notification must include the names of the carriers and agents involved and the reasons for the action. Shipments in possession of carriers that have lost their LOI must be pulled back by the TO unless the TO determines shipment(s) in the pipeline can be delivered. Shipments that have not been picked up must be pulled back and rebooked with another carrier.

4. Multiple Agents Listed in the LOI. A carrier's LOI may list as many local agents as the carrier desires. In the interest of maintaining good relations as well as providing sufficient SIT capability, the RSMO (PPSO OCONUS, except Alaska and Hawaii) must inspect the facilities of all agents listed on the LOI. A carrier with multiple agents must designate separate agents for booking purposes and as a single POC for domestic HHG and UB or the carrier may designate a single agent for all codes of service. When more than one agent is listed in the LOI, the carrier must indicate a specific agent to serve as a booking agent and for contact purposes. When the corporate structure of a carrier prohibits the designation of a specific agent for contact purposes, the TO must consider the first agent listed thereon as the booking and contact agent.

5. Carrier Utilizing Alternate DOD Approved Agent. In situations where an assigned agent is not available to service a shipment due to emergency situations beyond their control, the carrier, to meet the requirements of the customer, may utilize another DOD approved agent, which may not be listed on their LOI. The carrier or original assigned agent must first receive the approval of the origin TO and inform the TO of the name of the new agent that will be performing the service. To minimize any administrative burden on the origin TO, a GBL correction notice will not be required. However, the member's file must be annotated to that effect. It is imperative that prior to the new agent arriving at the residence, the

member/employee be notified of the change. The use of an alternate agent applies only in emergency situations and will not be approved on a regular and recurring basis.

6. General Agents. Carriers having more than one agent serving an overseas TO in a rate area may use a general agent as a booking agent.

7. Carrier or Agent Facilities Requirements.

a. A carrier desiring to participate in TGBL/ITGBL, HHG, and UB traffic must have satisfactory agency facilities. A minimum of 2,000 cubic feet of storage space must be available for TGBL traffic. For ITGBL traffic, 2,000 cubic feet of storage space is required for each carrier represented up to a minimum of 8,000 cubic feet for four or more carriers. This space must be exclusive of working space, fire aisles, overhead clearances, or access ways. If the carrier's agent also participates in agreements with other DOD-approved carriers, the minimum 2,000 cubic feet of space available for DOD storage must be required for each DOD-approved carrier represented by the agent. Door access must be adequate to handle safely the largest containers of any or all DOD-approved carriers represented.

b. Office facilities must accommodate the minimum personnel force required and must include sufficient private business telephone lines to properly service all DOD-approved carriers represented by the agent. A minimum of two private business telephone lines are required when an agent represents two or more DOD carriers.

c. The carrier agent must have the equipment to produce both linear and 2D barcode shipping labels or have contracted means to provide linear and 2D barcode labels.

8. Carrier or Agent Equipment Requirements. The carrier or the carrier's agent must maintain sufficient and suitable vehicular equipment available for local use in the pickup and delivery of DOD personal property shipments. Vehicular equipment may be either closed, weather-tight vans for loose stowed personal property or open flat-type equipment for containerized shipments. The vehicles may be owned by the carrier or agent or leased under a long-term agreement. Closed weather-tight vans must have a minimum of 1,000 cubic-foot capacity. Open vehicles must have a minimum bed length of 16 feet. Two or more smaller vehicles that together equal the preceding requirements are acceptable. For every two pieces of non-self propelled-equipment, a minimum of one tractor is required.

a. A minimum of two vehicles is required for the first domestic TGBL DOD-approved carrier represented. A minimum of three vehicles will enable the agent to represent the maximum allowable number of domestic TGBL carriers.

b. One additional vehicle is required for every two ITGBL carriers represented by the agent. However, after the requirements are met for the first four ITGBL carriers, additional vehicles are not required.

c. Those agents of DOD-approved carriers offering containerized service must maintain at least one mobile lifting device (such as a forklift) capable of handling a minimum of 4,000 pounds at 24-inch center.

9. Carrier or Agent Personnel Requirements. A minimum personnel force must be maintained as follows:

a. Packer/Warehouseman/Driver. A minimum of two qualified personnel must be maintained on a regular basis for the first carrier represented. To represent two to four carriers, the agent must maintain three qualified personnel. To represent more than four carriers, additional personnel requirements will be based upon the agent's ability to provide responsive service. It is the responsibility of the carrier and agent to determine what is necessary to provide responsive, quality service. Agents are subject to performance action if the TO determines them to be nonresponsive in providing service.

b. Administrative Personnel. The carrier's office or the carrier's agency office must be staffed at all times during normal working hours with personnel authorized to book shipments and arrange for the provision of services. One employee with such authority is required for one to three DOD-approved carriers represented. One additional employee with such authority is required when more than three DOD-approved carriers are represented.

c. English Speaking and Writing Employee. All carriers or their agents must have an English speaking and writing employee available at the member's/employee's residence at all times during the packing or unpacking of shipments. The agent must also have a full-time English speaking and writing employee reasonably available during normal working hours at the administrative office of the agent.

10. Multiple Use of Agent's Facilities.

a. The facilities provided by an agent for use by one or more DOD-approved carriers must be separate and independent of the facilities of any other agent. When more than one agent occupies the same warehouse facility, there will be a separation by solid wall of permanent-type construction.

b. An agent will not be permitted to subdivide a facility into additional agencies to circumvent the limitations on carrier representation indicated above. All agencies must be separately organized by incorporation or other legal instrumentality, and there will be no combining of equipment, personnel, or facilities. Once an agent's facility has been inspected and accepted by the TO, no portion of that facility will qualify as a new agency for additional carriers unless specifically approved by MTMC. Agents may appeal a decision to HQ MTMC for resolution.

L. TO ACTIONS UPON RECEIPT OF THE LOI

1. Acknowledging Receipt of the LOI. An LOI will be submitted to the TO. If submitted by registered or certified mail, the Domestic Return Receipt will serve as the notification of receipt of the LOI. If hand-delivered, the LOI will be submitted in duplicate with one copy being stamped and returned to the carrier. If submitted by facsimile, TO will date and sign the LOI upon receipt and return a facsimile of the signed copy. Acknowledgment of receipt does not indicate acceptance of the LOI.

2. Acceptance or Rejection of the LOI. Within 30 calendar days of receipt, the TO must determine whether or not the carrier has met all requirements and must advise the carrier, in writing, of the LOI's acceptance or reason for rejection.

M. CARRIER'S APPEAL UPON REJECTION OF THE LOI

A carrier notified that the LOI was rejected has the right to appeal the decision or request further consideration after correcting deficiencies. The TO must make every effort to resolve these appeals at the local level. Appeals that cannot be resolved by the TO must be referred to MTMC for resolution. In all such cases, the decision of HQ MTMC will be final.

N. INSPECTION OF A CARRIER'S FACILITIES AND EQUIPMENT

1. Previously Approved Facilities. The reinspection of a carrier's facilities and equipment, for the purpose of accepting a new LOI, is optional if they have previously been inspected and approved by the RSMO. However, the LOI must be accepted or rejected within 30 calendar days of receipt.

2. Initial Approval of Facilities. The RSMO must inspect and approve or disapprove the agent's facility. Should the agent's facility not be adequate to support services offered, the TO must return the carrier's LOI and advise HQ MTMC of the reasons. Only warehouses that meet the standards described in Appendix D will be considered for acceptance. Upon completion of the inspection, the carrier will be notified in writing whether the facility is approved or disapproved.

3. Overseas. For carrier facilities located OCONUS (excluding Alaska and Hawaii), the TO must conduct a preaward inspection of the facilities and equipment using the guidelines outlined in Appendix D.

4. Periodic Inspections. The RSMO or their representative must inspect carrier's facilities once every six months following the initial inspection (see Appendices D and E). If the facility historical record indicates a total volume of 25 or less shipments annually, and the facility has been awarded a "B" or better, annual inspections may be performed. When deficiencies are reported and action is warranted, the RSMO may place the facility in an ineligible status. The RSMO will inform the TO of any such action taken. The TO will inspect carrier equipment as frequently as necessary, and may inspect storage facilities. The TO must inform the RSMO of any action taken against the carrier involving facilities used for storage. For facilities located OCONUS (excluding Alaska and Hawaii), the TO must conduct a pre-award inspection of the facilities and equipment using the guidelines outlined in appendix G.

5. Adequacy of Carrier Overseas Agency Facilities. HQ MTMC must grant approval of a carrier's TOS to an overseas area. The carrier, prior to filing rates, must submit an LOI, and (when requested) a copy of the agency agreement directly to the overseas TO in sufficient time for acceptance by the designated LOI filing deadline. If the agent's facility is determined not adequate to support services offered, the TO must advise HQ MTMC of the reasons.

6. Trip Leasing. The carrier on the GBL will be fully responsible for the shipment (including all loss and damage, claims, but not limited to, any missed pickups and missed

RDDs). Under this rule, HHG carriers will only be allowed to trip lease with other DOD approved HHG carriers. Carriers will not be required to get trip lease approval from MTMC. This will reduce the administrative burden on carriers as the trip lease carrier will only be required to be a DOD approved HHG carrier. Regulations and rules governing trip leasing as set forth in the Code of Federal Regulations (CFR), Title 49, Part 376, Lease and Interchange of Vehicles apply. Failure to comply with the regulatory requirements will result in nonuse or revocation of their DOD HHG approval by MTMC. Unless a copy of the lease is carried on the equipment, the authorized carrier must keep a statement with the equipment during the period of the lease certifying that they are operating the equipment. The statement must also specify the name of the owner, the date and length of the lease, any restrictions in the lease relative to the commodities to be transported, and the address at which the original lease is kept by the authorized carrier. This statement must be prepared by the authorized carrier or its authorized representative.

O. ACTIONS TO BE TAKEN WHEN DEFICIENCIES ARE DISCOVERED IN A FACILITY

Upon discovery of deficiencies in warehouse facilities, the agent or contractor must be encouraged to correct those deficiencies during the inspection. In each instance, the improper storage methods must be annotated on the DD Form 1812, Warehouse Inspection Report, (Figure 402-2) and must be part of the performance record. Depending on the severity of the deficiencies, as determined by the scored elements on the DD Form 1812, the following actions apply:

1. When the inspection reveals the failure to exercise proper security measures such as inadequate locking devices, insecure access points, or structural discrepancies such as broken doors, windows or walls, the RSMO must immediately place the facility in an ineligible status, and the TO must place the carriers represented by the agent in a non-use status. The non-use status must remain in effect until written confirmation is received by the TO and/or RSMO indicating corrective action was taken and a reinspection of the facility has been conducted by the TO and/or RSMO. Generally, violations listed on the DD Form 1812 for asterisked items would be reasonable cause to immediately place the facility in an ineligible status.

2. If, in the RSMO's opinion, the deficiencies are of a nature that stored DOD shipments may be damaged or contaminated, the RSMO must immediately place the facility in an ineligible status and the TO must notify all carriers involved. The carriers must remove the property to an approved warehouse. The cost of removal must be at the expense of the carrier and at no expense to the Government or the member/employee. Generally, when a facility receives a quality control rating of 17 or more points on the DD Form 1812, the RSMO should immediately place the facility in an ineligible status. Relocation of shipments will be based on the potential and probable loss and/or damage if they were allowed to remain in the facility.

3. If, in the TO's opinion, the deficiencies cannot be corrected immediately but DOD shipments are properly protected, the property will not be removed to an alternate warehouse facility. The agent, and all carriers represented by that agent, must be notified of the deficiencies and must be given 10 days from the date of the inspection to correct those deficiencies or to implement corrective action. If the agent fails to satisfactorily correct the deficiencies within 10

days from the date of inspection, the agent must be placed in an ineligible status. These actions are generally taken when a facility receives a quality control rating of 9 to 16 points on the DD Form 1812.

4. If the agent is in an ineligible status and all deficiencies are corrected within 30 days from notification, and verified in writing by a follow-up inspection, the carrier must be restored to the TDR. If a deficiency remains uncorrected beyond 30 calendar days from the date of notification, all LOIs listing this agent must be returned, unless there are multiple agents on the LOIs.

P. AGENCY INELIGIBILITY APPEALS

1. It is the agent's right to appeal placement in an ineligible status. The agent's appeal must be submitted to the office that imposed the ineligibility and must be postmarked not later than 30 calendar days from the date the ineligibility was imposed. The agent's appeal must be factual and address the reasons why ineligibility action was not correct.

2. When the appeal is accepted, the TO/RSMO must issue a letter of reinstatement, returning the carrier to the TDR. If the appeal is denied, the TO/RSMO must inform the agent in writing of the reasons for the denial. The agent also must be informed that a further appeal may be made to HQ MTMC. The TO/RSMO's response to the agent must be made not later than 30 days from the date the appeal is received.

3. Appeals that cannot be resolved must be forwarded to HQ MTMC, Hoffman Building II, 200 Stovall Street, Alexandria, VA 22332-5000 (Attn: MTPP-HQ), who must resolve the appeal with the Service/Agency HQs.

Q. CARRIER REPRESENTATION BY AGENTS

For the movement of HHG originating in a State or the District of Columbia (DC) and being delivered to another State or the DC, or being delivered to an overseas destination, the following restrictions apply:

1. Domestic Interstate HHG. There are no restrictions pertaining to agent representation provided the following conditions are met. An additional 2,000 cubic feet of warehouse storage space and one additional vehicle are required per additional agency request over four DOD approved carriers/forwarders. Acceptance of a carrier's agent is contingent upon whether the agent can provide the TO with responsive service. When the service provided by an agent is not responsive, the TO, with the concurrence of HQ MTMC, may place a limit on the number of carriers that an agent may represent. No more than two agents may be regulated freight forwarders.

a. The agent desiring to represent additional, over four, DOD approved carriers/forwarders must submit a written request to the TO. The TO must assess the agent's capability to represent a greater number of carriers. The TO must provide comments, stating why the agent should be granted the request or why the request is not granted. The TO must cite the benefit to be realized by the installation, the agent's capability to represent another carrier based upon performance, and the verification of the agent's meeting the additional requirements

above. The TO has the authority to approve the agent's request. If the TO disapproves the agent's request, guidance in Paragraph Q.1.b. applies.

b. HQ MTMC must review both the agent's request and the TO's recommendation and decide if the additional carrier/freight forwarder request is warranted. If HQ MTMC approves the request, the agent must be notified, through the TO, by letter. If the request is disapproved, the entire case and the reasons for disapproval must be returned through the TO to the agent. The agent will be afforded an opportunity to provide any additional information in rebuttal to the decision; however, the carrier must do so within 10 days to HQ MTMC. If, in review of the additional information provided by the agent, HQ MTMC reverses the decision, the agent must be notified by letter through the TO. The HQ MTMC decision is considered to be administratively final.

2. Domestic Intrastate HHG. To move HHG originating in a State and delivered to a point in that same State, an agent may represent only one DOD-approved carrier. When an agent offers intrastate HHG service as a DOD-approved carrier, that agent may not represent any other carrier offering the same service.

3. ITGBL HHG and UB. There are no restrictions pertaining to an agency location within CONUS or overseas. Acceptance of a carrier's agent is contingent upon whether the agent can provide the TO with responsive service. When the service provided by an agent is not responsive, the TO, with the concurrence of MTMC, or overseas representative, may place a limit on the number of carriers that an agent may represent. Further, HQ MTMC, must ensure that the number of carriers represented by any single overseas agent does not exceed the agent's capability.

R. LOSS OF AGENT

1. General. When the TO is notified by an agent that it will no longer represent a carrier, the TO will advise the carrier of loss of the agent by registered mail (return receipt requested) or electronic mail, advising that the carrier has 45 calendar days from the date of the TO's letter or electronic transmission to obtain representation. If the carrier fails to obtain agent representation at the end of the specified period, the carrier's LOI will become invalid and the carrier will be placed in non-use. This constitutes a returned LOI. A carrier whose LOI is returned or has a loss of agent in three or more rate areas in the same rate cycle will be placed in non-use for 60 days by HQ MTMC.

2. Domestic Program. If the carrier fails to respond within 45 calendar days, the TO will invalidate the LOI by: (1) drawing a diagonal line through the LOI, (2) noting the date invalidated, (3) retaining it in the carrier's file until a new LOI is received and accepted and (4) follow the procedures in the TOPS Functional User manual for placing the carrier in non-use upon the loss of an agent.

3. International Program. If the carrier fails to respond within 45 calendar days, the TO will place the carrier in non-use and invalidate the LOI by: (1) drawing a diagonal line through the LOI, (2) noting the date invalidated, (3) retaining it in the carrier's file until a new LOI is received and accepted and (4) follow the procedures in the TOPS Functional User manual for

placing the carrier in non-use upon the loss of an agent. The TO will notify MTMC/MTPP-HQ, by message, of the non-use action and will specify which rate area(s) are affected and if it is for HHG and/or UB. MTPP-HQ will then notify all PPSOs in the affected rate areas that the carrier has been placed in non-use.

4. HQ MTMC will place the carrier in non-use as outlined below:

a. Loss of CONUS Agent. Carrier is placed in non-use outbound from the rate area affected.

b. Loss of Overseas Agent. The non-use must be for all traffic to and from the affected AOR immediately except where carriers have separate destination agents. In those cases, the non-use must be for origin or destination traffic only. The TO must advise MTPP-HR that the carrier has separate origin or destination agent capability at the overseas installation.

S. TRAFFIC DISTRIBUTION

1. TDRs are established to provide a means of recording shipment transactions IAW requirements for MTMC carrier programs. Separate TDRs are maintained for Intrastate, Interstate, and International programs (traffic for volume move will be recorded within the program).

2. Transactions. Symbols are used to code specific transactions on the TDR. Specifically:

OP = Member/employee preference - Member/employee not willing to pay for higher rate/carrier
OR = Member/employee preference - Member/employee willing to pay for higher rate/carrier
RR = Regular Refusal - Charge tonnage
RC = Refusal for Cause - No tonnage
NT = Refusal because out of NTS - Charge tonnage
PB = Pullback from selected carrier - Charge tonnage
TB = Turned back from selected carrier - Charge tonnage
AZ = Short Notice - Shipment awarded less than seven calendar days - No tonnage
TC = No charge
TN = Charge
PG = No charge
PP = Charge
DQ = Disqualification
NU = Non Use
S1, S2, S3 = Suspensions
TD = Traffic Denial

3. Format. The above codes are displayed based on the specific requirements for each program.

4. Entering Shipment Weight on the TDR. The TDR automatically aligns carriers based on cumulative tonnage allocated and estimated weight being offered for a particular shipment.

When a carrier is selected, the weight is added to the cumulative weight or the short notice weight based on the shipment criteria.

5. Member/Employee Preference for Carrier. The TO must honor a member's/employee's preference for either a carrier or agent if the member/employee states they are willing to pay excess costs incurred if the carrier or agent is not at the lowest overall rate. These shipments are annotated with a "OR" to identify an authorized exception in awarding tonnage. If the carrier is in the lowest overall rate group, the TO must honor a member's/employee's preference. A request by the member/employee not to use a carrier because of prior unsatisfactory service must be honored and the next eligible carrier will be selected to move the shipment. When a "member/employee preference" carrier is awarded tonnage, the TDR must be annotated with an "OP" to identify that this is an authorized exception to the procedures for awarding tonnage.

6. Short Notice Shipments. Short notice shipments should be allocated under the same TQAP procedures as regular shipments. The following are the three types of short notice shipments:

a. Regular Short Notice: The DOD must give carriers at least seven days notice to pick up a shipment. If the notice is less than seven days, the carrier does not have to accept the shipment and no tonnage is charged against the carrier. If the carrier does accept the shipment, tonnage is charged (exception is the "Z" and "B" tonnage explained below).

b. "Z" Tonnage Short Notice: A shipment seven or less days from the "interview" (counseling) date (date on the DD Form 1299) to the pickup date. The carrier is not charged tonnage if they refuse or accept these types of shipments. This type shipment is identified on the TDR as a "AZ."

c. "B" Tonnage Short Notice: A shipment that has been pulled/back or turned/back by a carrier within seven days of pickup and allocated to another carrier. The new carrier is not charged with the weight of the shipment and the TDR is annotated with a "PG" or "TC".

7. TOs must allow any carrier or agent access to the TDR, provided it is not disruptive to the TO's office operations. Information contained on the TDR reflects Tonnage Distribution, Quality Assurance Scores and other administrative data that is not confidential or business sensitive carrier data and would be releasable to the public. In addition, carriers or agents are not required to obtain written authorization from other carriers listed on the TDR to review the TDR. TOs should work with carriers and agents to establish a decision on whether to permit representatives of the carrier industry to review TDR information. Requests for copies of TDR records under the Freedom of Information Act (FOIA) should be processed under FOIA Regulations. Whether a request is viewed as disruptive is not grounds for withholding records under the FOIA. Such a request, regardless of their source, does not require written authorization from other carriers listed on the TDR. A request for all carriers listed worldwide in the TOPS system is not a valid request. A carrier may request TDR information that pertains to the TO's geographical AOR only. FOIA requests for HQ MTMC should be addressed to the Command Affairs Office, Attn: MTCA, 200 Stovall Street, Room 11N57, Hoffman Building II, Alexandria, Virginia 22332-5000.

T. DOMESTIC TDR

1. Interstate.

a. Separate TDRs must be established for Codes 1A and 2A shipments for each CONUS destination State and the District of Columbia. Separate TDRs will also be established for each area of operation within the AOR for each TO to each destination State. If there is more than one rate level to a destination State or the District of Columbia, like rates will be grouped from the low to high rate.

b. TDRs are set up with an average shipment score for each carrier and new rates published for the rate cycle. The low rate carrier (within each rate group) with the highest average shipment score will be awarded traffic first unless an authorized exception applies. All tonnage is set to zero at the beginning of each new rate cycle. Average shipment scores are based on the carrier's performance during the previous performance period. When a carrier has not been tendered any shipment or shipments have not been scored, the carrier's last score will be carried forward. New carriers are placed on the TDR with an administrative score of 90. Carrier's average shipment score will be extended to the second decimal place (e.g., 99.78) without rounding. Carriers with equal scores (within the same rate group) will be brought forth on the new cycle TDR (using previous tonnage as a factor) from low to high tonnage. When scores, tonnage, and rates are all equal, a random selection is made.

c. The most eligible carrier to receive the next shipment is the one with the highest performance score and lowest cumulative weight. When sufficient shipments are known by historical review to be available during a cycle, shipments may be allocated sequentially to give each carrier a shipment (or charge a refusal) during the initial movement through the TDR from the first to last carrier at the same rate level. Subsequent shipments in the same rate cycle should be allocated to correct an imbalance in weight allocated. If sufficient shipments are not projected to be available to permit a run through the entire TDR and to correct the resulting imbalances, sequential allocation may not be practical. When determining the projected availability of traffic for this purpose, historical data from a like cycle should be used, e.g., summer cycle data with summer cycle date from prior years. Traffic is to be managed to stay within a maximum differential of 40,000 pounds between the highest and lowest of all carriers at the rate level, to include carriers with zero weight. In a correctly maintained TDR, a carrier with a lower TQAP score should not have a higher cumulative weight than a carrier with a higher TQAP score except briefly in those situations requiring the application of sound traffic management to ensure a shipment moves in a safe and timely manner. When such situations occur, subsequent tonnage must be awarded in such a manner as to return the higher scored carriers to higher cumulative weight by the end of the rate cycle.

2. Intrastate.

a. Separate TDRs must be established for Codes 1B and 2B shipments from the origin Bill of Lading Office Code (BLOC) to each destination BLOC within the State of the origin BLOC.

b. The primary carrier (rate setter), who is otherwise qualified and has a TQAP score of at least 90, will receive 50 percent of the traffic. Other qualified carriers meeting the low rate will share equally in the remaining tonnage.

c. If two carriers establish an identical low rate, each carrier will receive 33-1/3 percent of the tonnage. The remaining 33-1/3 percent will be awarded to the carriers meeting the low rate.

d. If three or more carriers establish an identical low rate, each carrier will receive an equal percentage with the remaining carriers receiving the same percentage. Example: Three carriers submit the identical low rate with six carriers meeting the low rate. The three rate setters would each receive 25 percent of the tonnage. The other six carriers would divide the remaining 25 percent. At no time will the carriers meeting the low rate receive more tonnage than the rate setters. The TO will adjust percentages according to the volume of carriers involved.

e. TOs in those States where carriers have limited operating authority will award tonnage as follows:

(1) Separate TDRs will be established for the State and for each destination AOR where rates are filed and accepted by HQ MTMC.

(2) TDRs will be established based on:

(a) The carrier establishing the low rate will be placed on the TDR first. This low rate carrier must meet the TQAP criteria established by HQ MTMC. Those meeting the low rate will be placed on the TDR IAW their TQAP score. Carriers with equal TQAP scores will be placed on the TDR IAW low to high tonnage from the past rate cycle.

(b) All carriers will begin the cycle with zero tonnage.

(c) Carrier establishing the low rate will receive 50 percent of the tonnage from its AOR within its operating authority only. Example: Carrier AAAA establishes the low rate for the AOR. However, the carrier can pick up only in counties A and B of the origin AOR. Carrier AAAA will receive every other shipment from counties A and B. Carriers meeting the low rate will share in the remaining tonnage. In the event no one meets the low rate, carrier AAAA will be offered all traffic before an offer is made to a higher cost carrier. In all other areas covered by this low rate, but not a part of the low rate carrier's operating authority, tonnage will be divided equally among the carriers meeting the low rate to the extent of their operating authorities.

3. Shipment Refusals. Shipments refused by carriers must be considered traffic offerings and added to the carrier's cumulative weight. The refusal is annotated with "RR". Short notice shipments refused by a carrier are annotated with "AZ" and are not added to the carrier's cumulative weight. A carrier may notify the TO in writing to identify a period of time when they will not be accepting shipments due to peak season saturation. During this time, the carrier will automatically be charged with a refusal if they become the most eligible carrier identified for traffic on the TDR. The refusal weight is added to the carrier's cumulative weight.

4. Pullback/Turnback. If a shipment is pulled back or turned back, the TO must enter the code “PB” or “TB” and the weight is charged as follows:

a. Shipments pulled back/turned back with seven or less days notice of the pickup date are considered short notice shipments when reallocating to the new carrier. The new carrier is not charged tonnage on the TDR. Such shipments will be coded “PB” or “TB” on the TDR for identification and audit purposes. Shipments pulled back/turned back cannot be re-booked with the same carrier. (See Paragraph S.6.b.)

b. A shipment pulled back after the pickup date, or if the carrier failed to pickup on the pickup date, the tonnage is added to the carrier’s cumulative weight.

c. A shipment turned back before or after the pickup date is charged to the carrier’s cumulative weight.

U. INTERNATIONAL TDR

1. General. Carriers submit rates every six months for rate channels and codes of service for international traffic.

2. TDRs.

a. Separate TDRs will be established for each TO’s AOR for each ITGBL code of service for each traffic channel based on the carrier’s rate and average shipment score. Shipments must be distributed exclusively to carriers on the lowest rate level unless the volume of traffic exceeds the capability of the low rate carriers. When this occurs, the remaining traffic must be offered to carriers on the next and succeeding rate levels. However, shipments must always be offered first to the carriers on the lowest rate level before higher rate level carriers are considered unless the primary carrier is suspended, cancels its rates, is placed in nonuse, or refuses the traffic. The TDRs will be arranged in three sections: Sections I, II, and III record all traffic offered to the primary carriers, equalization carriers, and all other participating carriers, respectively.

(1) Section I. TOs must ensure that the primary carriers are offered their designated share of traffic. Periodic weight checks must be made to minimize deviations from the designated shares due to unequal weight of shipments. Example: If weight checks indicate that the “running” total of estimated tonnage for the traffic route is 240,000 pounds, a single primary carrier with a 50 percent share should have been offered approximately 120,000 pounds.

(2) Section II. If the primary carrier’s share for a given traffic channel is 50 percent, every second shipment (subject to a consideration of weight factors) should be offered on a rotational basis to equalization carriers. Equalization carriers are those carriers with exactly the same rates as the primary carrier. Each equalization carrier is obligated to accept residual shipments in an amount equal to one half the primary percentage. If equalization carrier capability is insufficient and there is no primary carrier or the primary carrier cannot accept additional traffic, shipments will be offered to other participating carriers. If there is no primary carrier because of rate cancellations, nonuse, etc., traffic will be awarded equitably among the equalization carriers.

(3) Section III. Other participating carriers will be offered any traffic which cannot be handled by primary and equalization carriers. Traffic will be offered first to other participating carriers at the lowest rate level and highest TQAP score. TOs should not penalize other participating carriers for failure to accept traffic beyond the established requirement.

NOTE: Estimated weights may be used in posting shipments to the TDR.

b. The carriers' rates, LOIs on file, Carrier Approval listing, and average semiannual shipment score will be used to establish all TDRs. The share of traffic to be offered to primary carriers during the traffic distribution period is distributed with the rate solicitation each rate cycle. Other participating carriers will appear in ascending order based on lowest rate and highest TQAP score.

c. Selective refusal of traffic by a carrier is prohibited. If a pattern is observed, action to suspend and/or request disqualification should be taken.

3. Percentage of Traffic.

a. Class 1 Rates. Carriers setting the low rate in a Class 1 traffic channel will be offered 100 percent of the traffic moved within that channel. If two carriers establish an identical low rate, both carriers will be offered one half of the total tonnage or 50 percent each.

b. Class 2 Rates. Carriers setting the low rate in a Class 2 traffic channel are offered a prescribed percentage of tonnage within each individual traffic channel.

(1) The primary carrier will be offered and is responsible for accepting actual tonnage equal to the primary percentage indicated. For example, if the primary percentage of the traffic channel is 20 percent, the primary carrier will be awarded 20 percent of the tonnage. The other 80 percent of the tonnage will be considered residual and will be shared equally between the primary and equalization carriers. Tonnage refused by the primary and equalization carriers will then be offered to the participating carriers. Example is as follows:

1 primary carrier = 20 percent*
7 equalization carriers plus the primary carrier = 10
percent each (totaling 80 percent)*
participating carriers = *

*The residual 80 percent of the tonnage will be offered equitably to the equalization (with the highest scored carriers first) and primary carriers. Any remaining traffic will then be offered to the participating carriers within the same rate groups with the highest scored carrier first.

(2) If two carriers establish an identical low rate, each carrier will be offered the prescribed tonnage for that traffic channel. An example is if two carriers establish the low rate on a 50 percent channel, each carrier will be offered 50 percent. If two or more carriers have filed identical rates and have equal average shipment scores, the random number table contained in Item 1706 of the International Personal Property Rate Solicitation must be used to determine the standing on the TDR.

(3) Equalization carriers may not be offered a larger share of the volume on a particular channel than the carrier establishing the low rate unless the low rate carrier is suspended or cancels its rates.

(4) All participating carriers must accept tonnage, if offered, as follows:

50 percent channel	12 percent
30 percent channel	7 percent
20 percent channel	5 percent
10 percent channel	2 percent

c. Class 3 Rates. Carriers will be placed on the TDR based on their average shipment score and will share equitably in traffic distribution.

V. CONTROLLING GOVERNMENT-OWNED HHGS CONTAINERS

1. The following procedures will be used to manage Government-owned HHGs containers:

a. Controlling Containers. The TO is responsible for the use, receipt, inventory, requirements determination, and disposition of Government-owned shipping containers. The TO will:

(1) Maintain management control of containers to prevent loss and misuse.

(2) Ensure that containers are properly packed and marked according to:

(a) Performance Work Statement, and the DPM contract.

(b) TOS for ITGBL shipments.

(3) Ensure that GBLs are annotated with the military rate tender as well as the number and type of containers when they are used by ITGBL carriers.

(4) Control use of overflow containers to ensure that they are used as little as possible.

(5) Verify nonavailability of usable containers when a contractor invoices for new containers.

(6) Require quality control inspectors to verify the use of new or old containers on DPM shipments and to identify the use or nonuse of Government containers by ITGBL carriers on his/her inspection report.

b. Using Type II HHGs Shipping Containers (Commercial Standard, American Society for Testing and Materials (ASTM)-D4169-01, Standard Practice for Performance Testing of Shipping Containers and Systems.).

(1) Containers will be used only for personal property shipments of DOD sponsored personnel who are entitled to shipment or storage under the JFTR/JTR.

(2) Authorization for using overflow or oversize containers will be granted only when the contractor can justify their use according to the following:

(a) The remaining articles of a particular shipment will not justify the use of another Type II container. Overflow containers are limited to one per shipment.

(b) Oversize containers are limited to use for a single item that exceeds the dimensions of a Type II container.

(c) Overflow or oversize containers will be constructed according to Federal Specification PPP-B-601.

(3) Containers will usually be considered as unfit for use and beyond economical repair when the cost of repair will exceed 30 percent of the container replacement cost.

(4) Containers determined to not be economically repairable will be turned in to the proper Defense Property Disposal Office for disposal. If the local property disposal office will not accept the unserviceable container parts, carriers or contractors may dispose of them when authorized in writing by the TO.

(5) TOs will require contractors or carriers to provide a written monthly report of all Government containers on hand. The report must arrive at the TO on the first work day of the month. The report will contain at least the following items:

(a) Number and type of serviceable or unserviceable containers on hand at the facility.

(b) Number and type of serviceable or unserviceable containers received since the last report.

(c) Number of containers used since the last report.

(6) Surveillance of Government-owned containers in possession of the commercial contractor. For DPM contractors, the TO must:

(a) Ensure that the contractor maintains adequate records of containers received and used as prescribed by the DPM contract.

(b) Obtain receipts for containers issued to the contractor.

(c) Ensure that the contractor uses containers only for Government-sponsored shipments.

(d) Maintain surveillance to ensure that containers are disposed of as prescribed.

(e) Ensure that the containers are identified as Government-owned with the marking “US Gov’t Property” clearly visible on one end and one side of the container.

(f) Ensure that the contractor is storing Government-owned containers with enough protection to prevent deterioration from the elements.

(g) Ensure that the contractor is aware of proper procedures for removing doors from Type II containers to prevent damage to the doors and to the frame.

(h) Document violations by DPM contractors and report them to the contracting officer.

RECEIPT FOR UNACCOMPANIED BAGGAGE		
1. DELIVERED TO		
2. RECEIVED FROM		
a. NAME *(Last, First, Middle Initial)*		
b. RANK	c. BRANCH OF SERVICE	d. SSN
3. RECEIPT OF THE FOLLOWING ARTICLES IS ACKNOWLEDGED		
DESCRIPTION (1)		NUMBER OF PIECES (2)
a. BOX		
b. DUFFLE BAG/SEA BAG		
c. SUITCASE		
d. CARTON		
e. FOOT LOCKER		
f. TRUNK		
g. TOOL BOX		
h. OTHER *(Describe)*		
4. NAME AND ADDRESS OF RESPONSIBLE ITO AT DESTINATION		
5. RECEIVED BY		6. DATE *(YYYYMMDD)*
a. NAME *(Last, First, Middle Initial)*	b. RANK	
7. ACTIVITY ADDRESS		

DD FORM 1796, SEP 1998 (EG) PREVIOUS EDITION IS OBSOLETE.

Figure 402-1. DD Form 1796, Receipt for Unaccompanied Baggage

WAREHOUSE INSPECTION REPORT

(Read Instructions on back before completing form.)

1. *(X as applicable)* [ ] BOTH BOA AND SIT [ ] RSMO [ ] ITO

2. DATE OF INSPECTION *(YYYYMMDD)*

3. CONTRACTOR/CARRIER

a. NAME

b. ADDRESS *(Include ZIP Code)*

4a. ADDRESS OF WAREHOUSE

b. FIRE SYSTEM/CLASS				c. LOTS	d. WEIGHT
SS/1	USS/2	D & R/3	FCR/4		

5. CONTRACT REFERENCE NUMBER

6. STATUS *(X)* [ ] ACTIVE [ ] INACTIVE [ ] INELIGIBLE

7. CURRENT CONTRACT OR TENDER OF SERVICE ON FILE *(X)* [ ] YES [ ] NO

8. PRE AND POST STORAGE SERVICES

[ ] a. Unauthorized equipment in use
[ ] b. Unauthorized cartons and packaging used
[ ] c. Improper packing/sealing/marking of cartons
[ ] d. Pickup service not accomplished on time
[ ] e. Improper loading/unloading of van or pallet
[ ] f. Disassembled parts not packaged/inventoried
[ ] g. Inventory stickers on finished surfaces
[ ] h. Improper appliance servicing/labeling
[ ] i. Smoking observed at residence
[ ] j. Employees on duty not efficient/neat
[ ] k. Origin premises not left in good order
[ ] l. Designation services improperly performed
[ ] m. Deviations to service order
[ ] n. Delivery service not accomplished on time

9. ADMINISTRATION

[ ] a. Incorrect inventory preparation
[ ] b. No separate weight ticket and certificate/PB and E/WT
[ ] c. Incorrect warehouse receipt preparation
[ ] d. Ineffective locator system*
[ ] e. Contract supporting paperwork needed

10. STORAGE METHODS AND OPERATION

[ ] a. Consigned lots not stored within 5 days*
[ ] b. Improper storage, stacks/pallets
[ ] c. Finished surfaces not protected by pads/wrap
[ ] d. Lots and separated pieces not elevated 2 inches
[ ] e. Lots stored against exterior walls
[ ] f. Lawnmovers not stored at base level of lot
[ ] g. Improper firearms control
[ ] h. Loose stack storage over 10 feet*
[ ] i. PBO contents not identified on inventory
[ ] j. Improper storage of upholstered pieces*
[ ] k. Improper storage of rugs/pads*

10. *(Continued)*

[ ] l. Improper piano/organ storage
[ ] m. Improper storage of mattresses
[ ] n. Segregated pieces not properly identified
[ ] o. Improper packing of mirrors/glass table tops
[ ] p. Inadequate protection against mold/mildew
[ ] q. Aisles being used to process goods in/out
[ ] r. Previous discrepancies not corrected*

11. FIRE PREVENTION AND HOUSEKEEPING

[ ] a. Electric/heat/water systems require repair
[ ] b. Evidence of smoking in warehouse*
[ ] c. Unauthorized items stored*
[ ] d. Improper aisle and/or stacking clearance
[ ] e. No fire system inspection* _____
[ ] f. No fire extinguisher inspection _____
[ ] g. No extinguishers on warehouse equipment
[ ] h. Trash/debris in storage area
[ ] i. Fire doors inoperable/in need of repair
[ ] j. No fire plan posted
[ ] k. Space heaters/extension cords being used
[ ] l. Gas and oil not drained from motorized items
[ ] m. Hazards noted within 50 feet of warehouse*
[ ] n. Flammables/combustibles found in warehouse*

12. WAREHOUSE PRACTICES

[ ] a. Inadequate security*
[ ] b. Inadequate loading/unloading area
[ ] c. Structural deficiencies (doors/floors/roof/walls/windows)
[ ] d. Inadequate protection from sun/dust/heat/cold/moisture
[ ] e. Lack of insect/rodent control _____
[ ] f. Vehicles parked in storage area
[ ] g. Commingled storage with undesirable commodities
[ ] h. Multiple occupancy*
[ ] i. Weight stored in excess of authorized limit*

13. DEFICIENCIES OBSERVED/ACTIONS TAKEN BASED ON QUALITY CONTROL RATING RAW SCORE

A: 0	B: 1 - 8	C: 9 - 16	D: 17 & OVER

[ ] a. No deficiencies observed
[ ] b. Corrective action without report is required as soon as possible
[ ] c. Corrective action, confirmed in writing, is required by *(YYYYMMDD)* _____
Send notice of corrective action to _____
[ ] d. You are _____ for further business as of _____
[ ] e. You are continued ineligible for further initial service orders.

14. DOCUMENT FILES CHECKED

15. LOT NUMBERS CHECKED

15. CONTRACTOR/CARRIER REPRESENTATIVE

a. SIGNATURE

b. TITLE

17. SIGNATURE OF DEPARTMENT OF DEFENSE INSPECTOR

DD FORM 1812, SEP 1998 (EG) PREVIOUS EDITION IS OBSOLETE.

COPY DESIGNATION: [ ] COPY 1 - RSMO/ITO FILE COPY [ ] COPY2 - CONTRACTOR/AGENT COPY [ ] COPY 3 - ITO/RSMO INFO COPY

Figure 402-2. DD Form 1812, Warehouse Inspection Report

INSTRUCTIONS

This form will be prepared in TRIPLICATE. The original will be retained by the inspection agency (ITO/RSMO); duplicate copy will be furnished to the contractor/carrier's agent; and triplicate copy will be forwarded to the responsible ITO/RSMO for information purposes.

ITEMS 8 - 12: When a discrepancy exists, it will be rated by using the numbers of 1, 2, and 3, reflecting the ascending seriousness of the findings, which is prescribed in the "Guide to Severity of Deficiencies." The rating will be indicated in the block preceding the violation. Enter a reference to the Tender of Service or the Basic Ordering Agreement for each violation found in Item 18, "REMARKS". If needed, include all additional comments in Item 18.
Items marked by an asterisk are applicable by the judgment of the inspector to interrupt the contract with or without the quality control rating of total assessed points.

ITEM 13: An assigned rating of A - D for administrative action corresponds to the total number of points given during the inspection. If Item c. is checked, complete the statement to show the allowed time for corrective action and reply.

18. REMARKS

DD FORM 1812 (BACK), SEP 1998

NOTE: In addition to items on the DD Form 1812 above, inspectors will also ensure the availability of barcode MSL capability by installed equipment or a contract capability.

Figure 402-2. DD Form 1812 (Back), Warehouse Inspection Report (Cont'd)

CHAPTER 403

SHIPMENT WEIGHING AND MARKING PROCEDURES

A. PURPOSE

This Chapter establishes procedures for the weighing and marking of shipments.

B. WEIGHT DETERMINATION AND REWEIGH

1. The weight of each shipment of HHG and UB moving in domestic or international commerce must be determined IAW the CFR Title 49, Part 375.7, Determination of Weights.

2. The TO may require carriers to use Government scales, without causing undue delay to the carrier. The TO must ensure the scales are certified by an authorized scale inspection and licensing authority.

3. PBP&E must be clearly marked on the inventory with carton size (cubic foot). If the PBP&E weight is unobtainable, use 40 pounds per cubic foot. Refer to the JFTR, par. U5335-E, When Shipment Weight Is Unobtainable, and the JTR, par. C8105-D, Constructive Weight.

4. Reweighs will be performed as determined by the TO when requested by the member/employee. All shipments must be reweighed when the member/employee has exceeded the authorized weight allowance.

5. Witnessed weighing and reweighs will be performed at the discretion of the TO. Certification will be annotated in the remarks block of the DD Form 619 (Figure 401-2).

a. DD Form 1671, Reweigh of Personal Property, (Figure 403-1) will be used in conjunction with DD Form 619 for capturing reweigh data IAW DOD component publications.

C. SHIPMENT MARKING

1. TGBL and DPM HHG and UB containers must have a completed military shipping label (MSL) affixed on one side and one end panel, except for duffel bags and similar packages which must have an MSL affixed to one surface. The MSL (Figure 403-2) requires human-readable information as well as linear and 2-dimensional bar codes. The human readable and linear bar coded portions of the MSL are prepared by the carrier or carrier's agent as described below and the 2-dimensional bar code is prepared IAW Appendix S. If the shipping container does not lend itself to application of the label, or if the label would cover or interfere with other required markings, the label will be attached to a general purpose tag or a placard. The general purpose tag or placard will be tied, wired, or otherwise fastened to the shipment unit or movement conveyance.

2. The following listed human readable data and Code 39 linear bar codes will be placed on each MSL. The human readable unit of measure will be provided in US standard terms, e.g., pieces, inches, feet, pounds for applicable measured items and the data values will be rounded up

to the nearest whole number with leading zeros suppressed. Also see DOD Handbook, MIL-HDBK-129, Military Marking and American National Standard for Material Handling (ANSI) MH10.8.1-2000, Linear Bar Code and Two-Dimensional Symbols Used in Shipping, Receiving, and Transport Applications.

a. TCN: Human readable and linear bar code using 1/2 inch high Code 39 format.

b. From: The consignor Department of Defense Activity Address Code (DODAAC) and in-the-clear address.

c. Transportation Account Code (TAC), PPGBL Number, and Carrier.

d. Piece Number: Piece number of this shipment (of Total Pieces) and a linear bar code using 1/2 inch high Code 39 format. Do not zero fill. Piece Number and Total Pieces may be expressed as "Piece Number of Total Pieces" to save space on the label.

e. Total Pieces: Total number of pieces in this shipment unit. Do not zero fill.

f. Weight: Actual gross weight (this piece) with unit of measure. Do not zero fill.

g. Date Shipped: Four-position code or in-the-clear date. Blank for Unit Move.

h. RDD: Three-digit code or blank. Blank for classified Unit Move.

i. Cube (ft): Cube (this piece) with unit of measure. Do not zero fill.

j. RPDD: From the PPGBL.

k. POE/CCP/Ship To: Three-digit air/water POE code, and enough space for 5 lines of up to 35 characters for the in-the-clear address.

l. Transportation Priority: Bold text 3/4 inches tall.

m. POD: Three-digit air/water POD code or blank.

n. Type Service: In-the-clear text (e.g., TGBL Cd J). The clear-text descriptions may be derived from the personal property TCN field 15 descriptions.

o. Tare Weight (lb): Weight of container before loading personal property.

p. Net Weight (lb): Weight of personal property loaded into a container.

q. TCMD Information: Linear bar code, Code 39 format.

r. Consignee/Mark For: Member's/Employee's name followed by the consignee DODAAC and/or Mark For in-the-clear address, and linear bar code using 1/2 inch high Code 39 format.

3. Carriers may optionally also stencil marking on outside containers. Freehand marking is not acceptable. Marking must be proportional to the available space on the container.

4. Any old markings must be permanently obliterated before the container's arrival at the member's/employee's residence. One copy of the member's/employee's order must be placed in each container used to ship Personal Property. When an order applies to more than one member/employee, the name of the member/employee to whom the personal property belongs must be identified.

REWEIGH OF PERSONAL PROPERTY	REPORT CONTROL SYMBOL	1. DATE *(YYYYMMDD)*
2. MEMBER NAME *(Last, First, Middle Initial)*	3. RANK	4. SSN
5. NAME OF ORIGIN INSTALLATION		6. GBLOC CODE
7. NAME OF DESTINATION INSTALLATION		8. GBLOC CODE
9. CARRIER NAME		10. SCAC CODE

11. ITEMS REWEIGHED

CONTROL NUMBER (GBL) a.	ORIGIN WEIGHT b.	DESTINATION WEIGHT c.	REWEIGH WITNESSED *(Y or N)* d.	CODE OF SERVICE e.

DD FORM 1671, SEP 1998 (EG) PREVIOUS EDITION IS OBSOLETE.

COPY DESIGNATION *(X)* ☐ Copy 1 - MTMC ADP Operations Division ☐ Copy 2 - Finance Office ☐ Copy 3 - Origin ITO ☐ Copy 4 - ITO Reweigh File

Reset

Figure 403-1. DD Form 1671, Reweigh of Personal Property

Figure 403-2. Military Shipping Label, Personal Property

CHAPTER 404

DIRECT PROCUREMENT METHOD

A. PURPOSE AND SCOPE

This Chapter provides guidance for the preparation and shipment by the DPM method, and provides instructions for the preparation and marking of DPM shipments and procurement of DPM services. This Chapter applies to all DPM HHG and UB shipments when transportation services are acquired on the PPGBL or other shipping document.

B. DPM SERVICES

When the DPM is used, generally the linehaul transportation service is provided by common carriers of freight. Approval by HQ MTMC is not required of commercial contractor providing DPM transportation services. Required materials (including containers) and services for the preparation, storage, and movement of DPM shipments are acquired by the contract. See Paragraph G for contracting procedures.

C. ROUTING BY THE PPSO

The PPSO determines the mode of transportation and the origin freight carrier for the movement of DPM shipments.

D. USE OF DPM AIR MODE FOR INTERNATIONAL HHGS

Prior to moving DPM shipments overseas, TOs must have Service approval IAW DOD component publications.

E. VALUATION OF SHIPMENTS

Generally, the maximum released valuation applicable to the lowest rate or rating published by freight carriers must be used for DPM shipments. Consideration must be given to use another code/mode of service when a member/employee requests a valuation higher than that offered by the freight carrier.

F. CONTAINERS

Authorized containers, including overflow and oversize containers, must be constructed as specified in the technical provisions of the Performance Work Statement (PWS) for Packing, Containerization, and Local Drayage of DPM Personal Property Shipments (Appendix G). The policy on the use of overflow and oversize containers is also set forth in this Regulation.

G. PROCEDURES

1. DPM Contracts. Packing and containerization services must be acquired by contract. The contracting format in Appendix G is mandatory. The PWS or the technical provisions for

Packing, Containerization, and Local Drayage of DPM Personal Property Shipments (Appendix G) and the Bid Schedules or items to be ordered must be used for developing requirements in acquiring packing and containerization services. The contractual clauses used in the solicitation, award, and administration of the contract are contained in the Federal Acquisition Regulation (FAR) and the Department of Defense Federal Acquisition Regulation Supplement (DFARS). Annual estimates need to be annotated on the Bid Schedules and a copy of Appendix G provided to the contracting office for their coordination and preparation of the solicitation package.

a. Inspection of shipments will be performed by using DD Form 2773, Report of Contractor Services (Figure 404-1). Unsatisfactory services will be indicated by citing specific paragraphs or areas in the PWS and annotating this on DD Form 2772, Contract Discrepancy Report (CDR) (Figure 404-2). When completed, the CDR will be forwarded to the contracting office for action. The contracting officer or COR will take action (set-off deduction, cure letter, etc.), against the contractor IAW FAR Clause 52.246-4, Inspection of Services-Fixed-Price.

b. Problems encountered in executing the PWS contract should be resolved by the COR, with the assistance of the contracting officer.

c. The PPSO must base contractual requirements on past experience and estimated future needs. The PPSO must establish areas of performance for contracting purposes. Both population density and traffic volume must be considered in the establishment of areas of performance.

2. PWS Contract Administration. The TO is responsible for the routing and release of shipments and for arranging delivery to the linehaul carrier. Delivery to the linehaul carrier can be by common carrier pickup at the contractor's facility or by local drayage by the contractor to the carrier's terminal. The TO will ensure the contractor meets all requirements of the PWS, and is also responsible for maintaining accurate DPM contract data in TOPS. If the contractor fails to comply with the terms of the PWS, the PPSO must document deficiencies and follow procedures outlined in Paragraph G.1.a.

3. Establishment of RPDD for DPM UB Shipments.

a. TOPS assigns a RPDD and prints it on the PPGBL. If the RPDD fails to print on the automated PPGBL, or for manual PPGBLs, the TO must compute the RPDD IAW the formula provided in Chapter 413, Paragraph D.1.r.(2)(c) and annotate the date in Block 18 of the PPGBL. The selected DPM carrier is responsible for delivering each shipment to the assigned AMC aerial port on the RPDD assigned.

b. For DPM shipments using AMC aerial ports, the printing of the DPM PPGBL triggers the actual weight and cube transmission to the ASN program. Therefore, the TO/PPSO must receive the actual weight and cube prior to printing the PPGBL. It is imperative that the contractor provides the required information to the TO/PPSO within one working day after pickup.

4. Consignment.

a. DPM shipments must be consigned IAW the PPCIG.

b. When the CONUS destination is not known for a shipment from overseas, the shipment must be consigned to the designated storage facilities as contained in the PPCIG in the CONUS. The statement "Hold for Storage in Transit" or "Hold for Nontemporary Storage" must be stenciled on each container after the consignment data. In such cases, the member/employee at the time application for shipment is made, must provide the origin PPSO a leave or contact address in the space provided on the DD Form 1299 (Figure 401-1). The origin PPSO must forward this information to the responsible storage facility identified at designated ports. The origin PPSO must instruct the member/employee to furnish disposition instructions to the designated storage facilities, either directly or through the most convenient PPSO, upon determination of the final destination.

c. Shipments moving by military or commercial air will not be consigned for placement in a "hold" status, except when AMC TP-4 tariff rates apply or when air is the only available shipping method between the origin overseas area and the CONUS. In those cases, the DPM must be used to make delivery to the nearest designated storage facilities. For shipments arriving at East/West Coast ports, refer to the CONUS PPCIG for the responsible facility.

5. Documentation for DPM Shipments Entering the DTS.

a. If documentation for DPM shipments is unavailable through TOPS, the PPSO will assign a TCN to each DPM personal property shipment entering the DTS. The TCN will be developed IAW this Regulation Part II, Cargo Movement, and annotated on the PPGBL, freight warrant, or other transportation acquisition document. When a shipment requires more than one transportation acquisition document, the same TCN must be annotated on each document. The PPSO must use the date of pickup from the member/employee as the Julian date in the construction of the TCN.

b. The PPGBL for UB shipments will be prepared after the TO/PPSO has received and input the actual weight and cube from the contractor into TOPS. The TO/PPSO will then provide the PPGBL to the contractor to give to the carrier upon pickup of the shipment from the contractor facility or will provide the PPGBL directly to the carrier picking up the shipment.

c. The TCMD will be prepared for all DPM personal property shipments entering the DTS.

d. After the TCMD is assembled, the shipper will offer the shipment for clearance before making the shipment. A clearance is required for all DPM personal property shipments entering the DTS. The shipper clears a DPM shipment by sending ATCMD data to the clearance authority.

e. DPM personal property shipments are considered cleared if the clearance authority has not challenged it by the hours/day entered in the ATCMD shipped field.

f. One copy of the PPGBL or other transportation acquisition document, annotated with the TCN, and a properly completed manual TCMD, together with other required documents, must be placed in a waterproof pouch on the number one container of the shipment. One copy of the inventory and one copy of the packing list must be placed in an envelope inside the number one container, in an easily accessible position. For shipments released from NTS, the exception

sheet must also be included. Specific detail on the preparation and usage of TCMDs, TCNs, data elements, prime documents, and trailer cards are contained in this Regulation, Part II, Cargo Movement.

g. For those shipments entering the DTS at DOD controlled aerial and water ports, a two-dimensional and linear bar coded military shipping label, prepared IAW Paragraph 403 C, must be prepared and affixed to each shipment piece.

h. The origin PPSO must mail one copy each of DD Form 1299, member's/employee's orders, transportation document, and PPGBL to the destination PPSO, who has final delivery responsibility.

REPORT OF CONTRACTOR SERVICES

SECTION I

1. INSPECTING ACTIVITY	2. CONTRACTOR NAME	3. CONTRACT NUMBER	4. ORDER NUMBER

5. SHIPMENT INSPECTED *(X as applicable)*			6a. DATE *(YYYYMMDD)*	b. TIME
☐ RESIDENCE	☐ CONTRACTOR'S FACILITY	☐ OTHER		

7a. PROPERTY OWNER NAME *(Last, First, Middle Initial)*		8. PICKUP/DELIVERY ADDRESS *(Street, Apartment Number, City, State, ZIP Code)*
b. RANK/GRADE	c. SSN	

INSTRUCTIONS:
Information in Section I above is obtained from DD Form 1299. Section II will be completed during the inspection of services. Place an "A" in the box when the service is acceptable or a "U" when the service is unacceptable. When the service is not required, place an "NA" in the box. The appropriate contract paragraph number must be placed in the column marked "REFERENCE" when the service is unacceptable.

SECTION II

9. SERVICE	10. REFERENCE	11. SCHEDULES		
		I	II	III
a. Did the carrier perform a premove survey, if required?				
b. Did the contractor weigh the shipment in accordance with prescribed procedures?				
c. Was PBP&E properly weighed?				
d. Did the contractor reweigh in accordance with prescribed procedures?				
e. Was shipment picked up within agreed times on the agreed date?				
f. Was shipment delivered within agreed times on the agreed date?				
g. Do packing materials meet specifications?				
h. Were proper packing methods used?				
i. Was inventory properly prepared?				
j. Were appliances properly serviced as required?				
k. Were appliances properly unserviced as required?				
l. Were proper materials used to service appliances?				
m. Were articles properly containerized?				
n. Were articles properly loaded in the van?				
o. Were containers properly marked?				
p. Were containers properly remarked, when required?				
q. Were proper storage services provided?				
r. Were unloading services performed and were articles placed so they were readily accessible to the member?				
s. Were unpacking services performed?				
t. Was debris removed from residence?				
u. Was loss and damage recorded on a DD Form 1840 at the time of delivery?				
v. Were weight tickets, GBL, and packing lists property completed?				
w. Were documents returned to the ITO within the required time frame?				

12. REMARKS

13. NAME OF CONTRACTOR NOTIFIED OF DISCREPANCIES *(Last, First, Middle Initial)*	14. SIGNATURE OF CONTRACTOR NOTIFIED OF DISCREPANCIES	
15. NAME OF INSPECTING OFFICIAL *(Last, First, Middle Initial)*	16. SIGNATURE OF INSPECTING OFFICIAL	17. DATE *(YYYYMMDD)*

DD FORM 2773, SEP 1998 (EG) REPLACES MT FORM 360-R (TEST), WHICH IS OBSOLETE. WHS/DIOR, Oct 98

Figure 404-1. DD Form 2773, Report of Contractor Services

CONTRACT DISCREPANCY REPORT

1. CONTRACT NUMBER	2. REPORT NUMBER FOR THIS DISCREPANCY
3. TO *(Contractor and Manager's Name)*	4. FROM *(Name of QAE)*

5. DATES *(YYYYMMDD)*

a. PREPARED	b. RETURNED BY CONTRACTOR	c. ACTION COMPLETE

6. DISCREPANCY OR PROBLEM *(Describe in detail. Include reference to PWS Directive; attach continuation sheet if necessary.)*

7. SIGNATURE OF CONTRACTING OFFICER

8a. TO *(Contracting Officer)*	b. FROM *(Contractor)*

9. CONTRACTOR RESPONSE AS TO CAUSE, CORRECTIVE ACTION AND ACTIONS TO PREVENT RECURRENCE *(Cite applicable Q.C. program procedures or new Q.C. procedures. Attach continuation sheet(s) if necessary.)*

10. SIGNATURE OF CONTRACTOR REPRESENTATIVE	b. DATE *(YYYYMMDD)*

11. GOVERNMENT EVALUATION *(Acceptance, partial acceptance, reflection. Attach continuation sheet(s) if necessary)*

12. GOVERNMENT ACTIONS *(Reduced payment, cure notice, show cause, other)*

13. CLOSE OUT

	NAME (1)	TITLE (2)	SIGNATURE (3)	DATE *(YYYYMMDD)* (4)
a. CONTRACTOR NOTIFIED				
b. QAE				
c. ACO				

DD FORM 2772, SEP 1998 (EG) REPLACES MT FORM 352-R, WHICH IS OBSOLETE. Designed using Perform Pro, WHS/DIOR, Sep 98

Figure 404-2. DD Form 2772, Contract Discrepancy Report

CHAPTER 405

RATES, CHARGES, AND BILLINGS

A. PURPOSE

This Chapter provides:

1. Guidance and establishes procedures for the use of rates and the application of related charges in the personal property program.

2. Procedures for cost comparisons to be used in determining the best service method and mode for shipping personal property worldwide.

3. Guidance for the solicitation and processing of one-time-only (OTO) rates, and establishes the criteria for using those rates.

4. Procedures for requesting volume movement rates and procedures to be used when a destination change is required after initial pickup.

B. PROCEDURES

1. Rate Filing. HQ MTMC and theater Commanders in Chief (CINCs) are the sources for all DOD rate solicitations for the movement of personal property.

2. Acceptance of Rate Filings.

a. General.

(1) Domestic rate cycles are 1 May-31 October (summer) and 1 November-30 April (winter).

(2) International rate cycles are 1 April-30 September (summer) and 1 October-31 March (winter).

b. Intrastate. Individual intrastate rate tenders are filed and maintained at HQ MTMC/MTPP-HR. The initial filing rate abstract is provided to the TO each rate cycle and must be posted for the carriers' review. Final rates are provided to the TO electronically.

c. Interstate/International. Rates are received by HQ MTMC/MTPP-HR and provided to the TO electronically.

d. European Intratheater Rates. TOs must compare door-to-door container rates shown in MTMC Personal Property – Europe (MTPP-E) solicited TOS with those ITGBL rates solicited by HQ MTMC and determine the most economical, best service method of shipment.

3. LOI Verification. Upon receipt of rates, HQ MTMC/MTPP-HR must verify LOIs with the TO prior to the acceptance of carrier's rates.

4. Linehaul Charges for a Consolidated Shipment. Refer to rate solicitation for guidance, policy, and rates.

C. COST COMPARISONS

1. General. Selection of the method of shipment generally must be based on the member's/employee's requirements and publications of the DOD components.

2. Code/Mode Selection Guide. The Code/Mode Guide is no longer published by HQ MTMC. The Code 3 Ocean Compensation Factors may be viewed on the MTMC website: https://www.mtmc.army.mil, then select Personal Property, International, Rate Solicitation, and Code 3 Ocean Compensation Factors. To view DPM Commercial Air Rates, enter https://www.mtmc.army.mil, then select Personal Property, International, and DPM Commercial Air.

D. OTO RATES

1. General. The TO must request all OTO rates from HQ MTMC and may not solicit or accept OTO rates directly from an ITGBL carrier.

2. OTO Request Format. When the need for an OTO rate exists, the TO must submit a message, fax, telephone (immediate response) Internet request to HQ MTMC, Attn: MTPP-HR IAW procedures provided in the International Rate Solicitation. The message request format and instructions are provided in Figure 405-1.

3. OTO Rates. OTO rates are effective on the date the carrier is notified of the shipment award by HQ MTMC. Carriers normally indicate this date as the issue date of the tender. HQ MTMC reviews the tender, and administrative acceptance is noted on the tender.

E. VOLUME MOVES

1. General. HQ MTMC is the sole negotiating authority for volume moves worldwide.

2. Criteria for Requesting Volume Move Rates.

a. The TO must request rate negotiations for a volume move when there is a confirmed group PCS or TDY move of personnel or dependents from a single origin (commuting area) to a single destination (commuting area) normally within a 90-day period. HQ MTMC reserves the right to waive the 90-day period. The estimated weight of personal property to be moved must be a minimum of the following:

(1) Member/Employee HHG - 200,000 net lbs, or

(2) Member/Employee UB - 50,000 gross lbs, or

(3) TOs having special operational requirements may request a volume move for lesser tonnage (e.g., base closures, etc.).

b. Volume Move Request Format (Figure 405-2). The TO must request each volume movement by letter or priority message at least 30 days before the scheduled pickup date for the first shipment. The original of the request must be forwarded to HQ MTMC, ATTN: MTPP-HR, and one copy must be furnished to the destination TO. In addition to providing the information listed in Figure 405-2, the TO must give the reason for the volume move request (change of home port of ship, school graduation, Base Realignment and Closure (BRAC), etc.).

c. Volume Movement TDR.

(1) HQ MTMC must perform a comparison of all accepted rates to determine the overall best value carrier(s). The origin TO will be notified immediately of the results.

(2) The TO must maintain a separate TDR for volume move tonnage. Shipments must be distributed to the best value carrier(s) that can provide the required service based upon:

(a) The percentage of tonnage that can be handled daily.

(b) The percentage of total tonnage that can be handled.

(3) TOs may continue to tender shipments to the extent of the carrier's ability to service the shipments, even though the volume may exceed the maximum percentage. TOs may award shipments to the same destination that are not part of the volume move.

(4) When offering shipments to carriers, the TO must consolidate shipments whenever practical.

3. Final Reports. Both the origin and destination TO must provide a final report to HQ MTMC, ATTN: MTPP, within 30 days after completion of the volume movement. The final reports must include the following:

a. Origin TO.

(1) Total number of shipments.

(2) Total weight shipped.

(3) Total charges.

(4) Information concerning the quality of origin service provided by participating carriers.

b. Destination TO.

(1) Total time that shipments were in SIT, reported in daily increments.

(2) Information concerning the quality of destination service provided by participating carriers.

4. Each shipment in a volume move is scored in compliance with TQAP.

F. TRANSPORTATION AND ACCESSORIAL CHARGES

1. Statement of Accessorial Services Performed.

a. DD Form 619 (Figure 401-2) and/or DD Form 619-1 (Figure 401-3) will be used by the carrier to support billings for materials and services not included in the linehaul transportation, single factor rate (SFR), SIT, reweigh, and accessorial services provided in conjunction with the delivery. The carrier's representative must prepare and submit each DD Form 619 and/or DD Form 619-1 to the member/employee, member's/employee's agent, or the TO representative for verification and signature. DD Form 619 and/or DD Form 619-1 must be signed only after verification that materials and services specified on the form were actually provided. The member/employee, member's/employee's agent, or the TO representative will not, under any circumstances, sign a blank or partially completed DD Form 619 and/or DD Form 619-1. The only blanks that may be left void are the "unit price" and "charge" columns. The "number" block will reflect either the quantity or the word "none".

b. The carrier must furnish the member/employee and origin TO one copy each of the DD Form 619 and/or DD Form 619-1 itemizing accessorial services performed and materials furnished. Additionally, the carrier must forward a copy of all subsequent DD Forms 619 and/or DD Forms 619-1 prepared in connection with the shipment to the TO ordering the service.

c. All approved accessorial services must be entered into TOPS.

2. Third Party Service. Items serviced by a third party must be supported by an invoice stating the type of service performed. See rate solicitation for specific service or billing information.

3. Payment of Transportation and Accessorial Charges Upon Placement of the Shipment in SIT - PPGBL Termination Upon Expiration of Authorized Period of SIT. The PPGBL automatically terminates at midnight on the last day of the authorized SIT period. Payment for delivery services at Government expense after the PPGBL has terminated must be made under local invoicing or purchasing procedures.

4. SIT Delivery and Reweigh (DD Form 619 and/or DD Form 619-1). DD Forms 619 and/or DD Forms 619-1 submitted for services rendered at the destination must indicate:

a. The accessorial services ordered and furnished.

b. Receipt of the shipment by the member/employee or the member's/employee's agent.

c. The SIT control number of the shipment.

5. Reweigh Procedures. The Government must pay for an ordered reweigh when the reweigh net weight is greater than the initial net weight or when the difference between the initial weight and the reweigh weight is less than the tolerance specified in the governing document. The carrier must submit two copies of a completed DD Form 619 and/or DD Form 619-1 to the TO, indicating that a reweigh was requested and the service was performed. The TO must certify the reweigh only when the reweigh weight is within the authorized tolerance. The TO

must return the original to the carrier for billing purposes. The second copy will be retained by the TO in the shipment file.

6. Payment of Excess Costs for Special Routing and Services.

a. IAW the JFTR, par. U5340-A, Excess Charges or the JTR par. C8010-B, Employee Paid Expenses, the member/employee may elect to use special or accessorial services that may involve additional expenses not authorized for payment by the Government. Examples of such services include the following:

(1) Multiple shipments to the same destination.

(2) Services such as additional valuation, specific routing, and special loading.

(3) Shipment to or from points not specifically authorized in the member's/employee's orders.

b. Excess costs arising from the selection of unauthorized services must be borne by the member/employee. The PPSO must require a written request and agreement to pay excess costs from the member/employee or member's/employee's agent before ordering services that will result in excess costs. DD Form 619, showing entries for special or unusual services that will involve excess costs, must be signed by both the PPSO and the member/employee or the member's/employee's agent. If the member/employee or the member's/employee's agent is not available for signature, the PPSO must sign the DD Form 619 and must attach a full explanation of the requirements for any services provided.

c. When not indicated on the PPGBL, charges for partial pickup or delivery must be shown as separate items on the DD Form 619 when authorized by the PPSO.

G. SHIPMENT DESTINATION CHANGES AFTER PICKUP

1. General. When a properly supported request for destination change is received, the TO must determine the action to be taken based on the status of the shipment and the type of change required. See Domestic Personal Property Rate Solicitation, and International Personal Property Rate Solicitation, for the rules for shipments diverted after commencement of transportation services.

2. Preparation and Distribution of Certificates of Delivery and Diversion. Figures 405-3 and 405-4 provide formats and specify the information needed to issue Certificates for Delivery from SIT and Certificates for Diversion. Certificates for Delivery from SIT and Certificates for Diversion must be distributed as follows:

a. The home office of the carrier must be listed as the action addressee.

b. All origin or destination TOs must be listed as information addressees.

c. One copy must be provided to the member/employee or member's/employee's agent.

d. One copy must be retained by the issuing TO.

OTO MESSAGE REQUEST

The following format and data sequence is mandatory:

FROM: TO//

TO: CDR MTMC ALEXANDRIA VA//MTPP-HR//

SUBJECT: REQUEST FOR ONE-TIME-ONLY PERSONAL PROPERTY SHIPMENT

1. MEMBER'S/EMPLOYEE'S NAME, RANK/GRADE, SSN, MILITARY SERVICE/AGENCY.

2. CODE OF SERVICE.

3. ORIGIN (INCLUDE CITY, STATE/COUNTRY, BLOC).

4. DESTINATION CITY, INSTALLATION, STATE/COUNTRY, AND DESTINATION BLOC.

5. PICKUP DATE.

6. REQUIRED DELIVERY DATE.

7. ESTIMATED WEIGHT IN NET POUNDS FOR HOUSEHOLD GOODS AND GROSS POUNDS FOR UNACCOMPANIED BAGGAGE.

8. DATE OTO INFORMATION IS REQUIRED FOR BOOKING PURPOSES.

9. ROUTING FOR CODE 5/T SHIPMENTS.

10. LIST SUSPENDED CARRIERS.

11. REMARKS (INCLUDE INFORMATION, I.E., SHIPMENT PACKED AND CRATED, SHIPMENT IN NTS, USE OF SPECIFIC AGENTS AT ORIGIN OR ANY OTHER UNUSUAL CIRCUMSTANCES).

Figure 405-1. OTO Message Format

VOLUME MOVE REQUEST FORMAT

The following is a sample of the format and data sequence of volume move request.

1. Number of individual shipments.

2. Estimated weight of each shipment.

3. Estimated total weight of all shipments.

4. Date first shipment is to be moved.

5. Anticipated date last shipment is to be moved.

6. Shipping officer controlling volume movement, city, state/country of origin, and destination (including approximate mileage of any commuting area).

7. Full business name and Standard Carrier Alpha Code (SCAC) of all carriers (not agents) qualified to serve the origin and destination points.

8. Estimated weight that may require SIT at origin/at destination.

9. Lowest current applicable transportation rate.

10. Local pack and crate and overflow rates (international movements only).

Figure 405-2. Volume Move Request Format

SAMPLE MESSAGE

CERTIFICATE FOR DELIVERY FROM STORAGE IN-TRANSIT (SIT)

FROM: CPPSO NORFOLK VA// (First Destination PPSO)

TO: NORTH AMERICAN VAN LINES// (Carrier Tendered Shipment)

INFO: ABC WAREHOUSE INC// (SIT Facility)

416BMW GRIFFISS AFB NY//LGTT// (Origin PPSO)

CDR USAARMC FT KNOX KY//DIO-TRANS// (Second Destination PPSO)

UNCLAS

SUBJECT:CERTIFICATE FOR DELIVERY FROM STORAGE IN-TRANSIT (SIT)

1. SHIPMENT INFORMATION:

A. PERSONAL PROPERTY SHIPMENT OF: (Member's/Employee's Name), (Social Security Number), (Member's/Employee's Rank/grade), TENDERED TO GBL NO. (GBL Number), (Code Number), TO (Name of Carrier & SCAC), BY PPSO AT (Origin PPSO).

B. PLACED IN SIT ON (Date) AND ORDERED OUT ON (Date) FROM (SIT Facility), SIT NUMBER (Number), TO BE DELIVERED TO (City & County of Final Destination), WITH A RDD OF _____.

C. SIT USED AT FIRST DESTINATION: (Number of days at first destination); REMAINING SIT AUTHORIZED: (Authorized days remaining).

2. NO OTHER GBL WILL BE ISSUED. ALL CHARGES WILL BE COMPUTED IAW DELIVERY FROM SIT RATE CONTAINED IN APPLICABLE MILITARY BASIC TENDER SUPPORTED BY DD FORM 619.

3. AUTHORIZING OFFICIAL:

Drafter Typed Name, Title, Office Symbol, And Phone

Typed Name, Title, Office Symbol, And Phone.

Figure 405-3. Sample Message, Certificate for Delivery from Storage In-Transit (SIT)

CERTIFICATE FOR DIVERSION

FROM: JPPSOWA FT BELVOIR VA// (Requesting PPSO)

TO: ABC MOVING AND STORAGE INC// (Carrier Tendered Shipment)

344 OAK STREET NEWTON MI 48217//

INFO: NAS MAYPORT FL// (New Destination PPSO)

NAF SIGONELLA SICILY// (Origin PPSO)

UNCLAS

SUBJECT: CERTIFICATE FOR DIVERSION//

1. THE PERSONAL PROPERTY SHIPMENT: (Member's/Employee's Name); SSAN: (Member's/Employee's SSAN); RANK/GRADE: (Rank/Grade), TENDERED ON GBL NUMBER: (GBL Number), TO (Name of Carrier & SCAC), BY THE PPSO AT (Origin), ON (Pickup Date), WITH DESTINATION OF (Destination), WAS DIVERTED AT (Diversion Point), ON (Diversion Date) TO (New Destination), WITH A NEW RDD OF (New RDD).

2. Identify letter or other authority or reason for diversion and new RDD, e.g., MODIFIED PCS ORDERS, DATED 20 FEB 02, ARE AUTHORITY FOR DIVERSION.

3. NO OTHER PPGBL WILL BE ISSUED. ALL TRANSPORTATION COST, DIVERSION CHARGE, AND ADDITIONAL COSTS, IF ANY, WILL BE COMPUTED IN ACCORDANCE WITH APPLICABLE RATE SOLICITATION AND CHARGED TO THE APPROPRIATION SHOWN ON THE ORIGINAL PPGBL.

4. AUTHORIZING OFFICIAL:

Drafter Typed Name, Title, Office Symbol, Phone

Typed Name, Title, Office Symbol, and Phone

Figure 405-4. Sample Message, Certificate for Diversion

CHAPTER 406

STORAGE

A. SIT

1. General. The TO may use SIT when it is necessary to meet the member's/employee's requirements. Although SIT normally is used at destination when a shipment arrives before the member/employee has established a delivery address, it also may be used at origin or at an intermediate point when considered by the TO to be in the best interest of the member/employee and the Government. The carrier should use the carrier's DOD-approved agent facility located nearest the destination city or installation shown in Block 18 of the PPGBL. The carrier must use the DOD-approved facility located within the destination TO's AOR, except when authorization to use another facility, is granted by the destination TO. SIT and related charges are based on the DOD-approved facility nearest the destination city or installation of the shipment. The nearest available carrier's agent DOD-approved storage facility is defined as follows: The DOD-approved carrier agent's facility that has space for the shipment and is accepting DOD traffic from the carrier. If the agent refuses to accept a shipment, i.e., because of the carrier's refusal to provide a waiver and/or due to the carrier's poor payment history, the agent's facility will be considered "available" for the purpose of determining charges irrespective of which destination warehouse the carrier uses. Waivers are not allowed to be issued by a carrier to a "foreign" agent so the agent can bill directly for SIT. NTS at origin may not be converted to SIT at origin unless a PPGBL is issued, an inventory is prepared, and a carrier takes physical possession of the property.

2. SIT Period.

a. SIT for DOD civilian employees may not exceed 90 days, unless additional storage is authorized (Figure 406-3) IAW the JTR, par. C8605-B, Justification.

b. SIT for military members may not exceed 90 days unless additional storage is authorized (Figure 406-3) IAW the JFTR, par. U5375-B.2 and B.3, Time Limits.

c. When SIT is extended beyond the first 90 days, the TO must notify the carrier of the extension and the projected termination date. A copy of DD Form 1857, Temporary Commercial Storage at Government Expense, (Figure 406-1) or Inbound Arrival/Expiration Notice letter (Figure 406-2), will be provided to the carrier for each extended 90-day period. When a shipment remains in storage beyond the SIT entitlement period, carrier liability terminates at midnight of the day the carrier or warehouse receives written notice from the TO/PPSO that the entitlement has ended (last day of the SIT period), the PPGBL character of the shipment ceases, and the warehouse becomes the final destination of the shipment. At this time, the warehouseman becomes the agent for the member/employee and the shipment becomes subject to the rules, regulations, charges, and liability of the warehouseman. Members/employees will be advised of the requirement to procure their own insurance during this period of storage. The TO may maintain the PPGBL character of the shipment in SIT and recoup the excess storage cost from the member/employee prior to delivery or through the pay checkage process for

members in an active pay status. The member/employee is entitled to delivery at Government expense in either case. See Chapter 405, Paragraph F.3 for delivery payment procedures when SIT has expired and shipment has been terminated at SIT facility.

3. Prevention of Unnecessary SIT. The TO must make every effort to prevent unnecessary use of SIT. The destination TO must establish a file (either electronic or hard copy) for inbound personnel.

4. Procedures at Destination. When the carrier notifies the destination TO of a shipment arrival, the TO must attempt to contact the member/employee or the member's/employee's agent at the designated POC. If the member/employee has not reported to the destination TO or the TO is unable to contact the member/employee or the member's/employee's agent, the TO will instruct the carrier to place the shipment in SIT. In these cases, the TO may not direct the carrier to attempt delivery at the member's/employee's residence. Disposition instructions will be provided to the carrier prior to the expiration of free waiting time for domestic shipments (Domestic Personal Property Rate Solicitation), and within the specified time period for international shipments (International Personal Property Rate Solicitation).

5. Record of Authorized SIT. The TO must maintain a separate control log (either electronically or hard copy) for recording all SIT authorizations. The log must contain, as a minimum, the following information: SIT control number, member's/employee's name, code of service, storage location, and the dates ordered into and out of SIT. A copy of DD Form 619-1 (Figure 401-3) authorizing the SIT must be retained.

6. SIT for Split Shipments. If a shipment arrives at destination as a split shipment and the member/employee is unavailable to receive any portion, SIT may be authorized separately on each portion. The TO must issue a separate SIT control number for each portion of the split shipment. The carrier is required to obtain a separate weight ticket and a separate SIT control number for each portion of the split shipment. The cost of weighing each portion is borne by the carrier. The Government will not pay the minimum weight as applicable to storage.

7. SIT Control Number. Upon ordering a shipment into SIT, the TO must furnish the carrier a SIT control number. The seven-digit SIT control number is constructed as follows:

a. The first position is the last digit of the year in which the shipment enters SIT (for example, if the shipment is placed in SIT during calendar year 2002, the first digit will be 2).

b. The second, third, and fourth positions are the calendar day the shipment enters SIT, e.g., if the shipment is placed in SIT on November 9 (calendar day 313) the second, third, and fourth digits will be 313.

c. The last three digits must indicate the numerical sequence of the shipments entering SIT for that day; e.g., if the shipment is the eleventh shipment placed in SIT on that day, the last three digits will be 011.

d. As described above, the SIT control number for the eleventh shipment placed in SIT on November 9, 2001, is 1313011.

8. Delivery Out of SIT.

a. When ready to accept the shipment, the member/employee must contact the destination TO and request delivery to the destination residence.

b. The carrier must prepare a DD Form 619-1 for billing purposes. The DD Form 619-1 must include all accessorial services incidental to the delivery of the shipment. The carrier must return the completed DD Form 619-1 to the destination TO. The destination TO verifies and signs the form, keeping one copy in the permanent shipment file. If loss or damage is discovered in a shipment delivered from SIT, the carrier, member/employee or member's/employee's agent must record the loss/damage on DD Form 1840 (Figure 401-4). The member/employee or the member's/employee's agent will record later discovered loss/damage on the DD Form 1840R (Figure 401-5).

c. The destination TO will order long deliveries out of SIT by preparing a "Certificate for Delivery from Storage In-Transit (SIT)" (Figure 405-3).

d. Partial withdrawals will consist only of complete cartons or item numbers on the inventory. Request for partial withdrawals should be made at the time of counseling and indicated to the carrier or carrier's agent at the time of packing. The inventory item number will be furnished by the member/employee to the TO, who will, in turn, order the service. Certification of the DD Form 619-1 by the destination TO is required. The member/employee, member's/employee's agent, or TO representative has the right to be present at the carrier's facility during the sorting of the property. The carrier will deliver the property; however, the member/employee has the option of picking up the property from the warehouse. The carrier is responsible for obtaining the weight of the portion withdrawn.

e. The delivery charge for a shipment placed into SIT in two portions and delivered from SIT in one lot will be based on the delivery rate for the combined weight.

B. RESPONSIBILITIES FOR NTS

1. HQ MTMC/MTPP-HP is responsible for the administration of the NTS program, through designated contracting officers at the RSMO. The RSMOs must:

a. Conduct preaward surveys to ensure that NTS contracts are awarded only to qualified contractors. The qualifications of contractors must be determined IAW the preaward survey guidelines and guidelines contained in the FAR.

b. Execute, distribute and administer the Basic Ordering Agreement (BOA) and DD Form 1162-1, Schedule of Services and Rates for Household Goods (Figure 406-4) IAW this Regulation and the FAR.

c. Monitor the weight stored in each approved warehouse, its subdivisions, or fire divisions.

d. Perform contract administration of DD Form 1164, Service Order for Personal Property (Figure 406-5) that have been placed against BOAs by ordering officers of using activities.

e. Provide each contractor, in writing, the names and locations of using activities and the names of persons authorized to issue DD Form 1164 under each BOA.

f. Notify all recipients of the BOA when it is modified or terminated.

g. Perform inspections of storage facilities to ensure that all services are provided IAW the provisions of the BOA.

h. Investigate incidents on the operation of the NTS program IAW this Regulation.

i. Conduct SAVs during each inspection cycle at each ordering installation in their AOR. The purpose of such visits must be to exchange information concerning the adequacy of service provided by each local contractor and to identify potential service problems. Provide the ordering officer a copy of the SAV if it identifies potential service problems.

2. Ordering officers must:

a. Acquire all required services for the storage of HHG in both Government and commercial facilities.

b. Cite the funds for payment of the services ordered and process invoices for payment.

c. Maintain all documents relating to each storage lot.

d. Provide copies of SIT storage inspections conducted independently to the RSMO contracting officer when inspections reveal discrepancies at a facility approved for storage.

e. Serve as the POC for the member/employee on all matters concerning the storage of HHG.

f. Immediately notify the RSMO when the contractor is unable to locate a lot in storage.

g. Recoup excess costs from the member/employee, IAW Service/Agency guidelines or regulations, when the weight in storage is in excess of the JFTR/JTR allowance.

h. Terminate all NTS at Government expense for storage beyond the authorized storage period and advise the contractor to bill the member/employee for future storage costs. The TO, through the Service/Agency HQs, may continue to pay for the NTS until delivery of property. In this instance, the member/employee must reimburse the Government for the cost of storage beyond their entitlement.

i. Authorize continued storage at Government expense when travel and transportation entitlements of retired members have been extended. The member subsequently must reimburse the Government for storage costs.

3. RSMO/Installation Commander. RSMOs/Installation Commanders are responsible for periodically inspecting all Government-owned storage facilities under their jurisdiction used for the storage of DOD-sponsored personal property shipments. Such inspections must be performed under direction of Service/Agency HQs and must be recorded on DD Form 1811, Pre-Award Survey of Contractor's/Carrier's Facilities and Equipment (Figure 406-6) and DD Form 1812 (Figure 402-2). Before approval by the installation commander, TO personnel must conduct an inspection of the Government-owned facilities.

C. NTS PROCEDURES - ORDERING OFFICERS

1. General. The available low-cost, qualified storage facility must be used for NTS, regardless of its location. When an ordering officer has BOAs available that offer facilities outside the installation's AOR, awards will not be limited to facilities within the AOR. Use Figure 406-7, Storage Facility Rates, to make a cost comparison when determining whether to use commercial or Government facilities.

2. Determining the Low-Cost Contractor. The ordering officer must use Items I, II, III, IV, V, and VI of the DD Form 1162-1, to determine the low-cost contractor. Item II will be used only when upright wardrobe services are required. Item V, storage costs, will be projected over the estimated storage period for each lot.

3. Attempted Pickup or Delivery. If the member/employee or member's/employee's agent is not available at the residence when the contractor attempts to pickup or deliver on the date specified on DD Form 1164, the contractor must be paid the drayage rate per DD Form 1162-1 on a 500 lbs minimum (weight) shipment for attempted pickups and the actual shipment weight for attempted deliveries.

4. Acquisition of Commercial Storage Services. Contractors must be contacted in the order of their BOA rates (from lowest to highest), even though they may be located outside the installation's AOR. The storage lot must be offered to the first contractor that can perform the services at the time they are required. A contractor will not be contacted if a written notice that services cannot be provided has been received from that contractor. When two or more contractors have equal rates, the ordering officer must offer lots to those contractors on a fair and equitable basis. When other than the low-cost contractor is used, the ordering officers' contract file must contain a list of the contractors refusing the lot with the reasons for refusal.

5. Member/Employee Preference for Contractor. A member's/employee's choice of contractor is prohibited unless the contractor-requested cost is the same or no more than the lowest offer. The rules governing the requirements of the BOA and FAR require that orders be issued to the lowest offer. The Government has no authority to enter into three-party contracts between itself, the NTS Contractor, and the member/employee.

6. Service Order for Personal Property.

a. Upon the contractor's acceptance of the offer of a lot, the ordering officer must request the contractor to provide a lot number and then prepare a DD Form 1164. A separate DD Form 1164 will be prepared for each HHG lot. Service orders must be executed only by ordering officers having specific authority to issue such orders. Orders for services must be furnished to

the contractor before the date on which the services are to be performed. DD Form 1164 is self-explanatory except for the following items:

(1) Block 3.b, Federal Agency. Enter two-digit alpha code depicting the federal agency identity; e.g., DF--Department of Air Force, DA--Department of Army.

(2) Block 3.c, Appropriation Identity. Identifies code designation, assigned locally by each activity.

(3) Block 3.g, Lot Number. Enter lot number furnished by the contractor.

(4) Block 3.i, Estimated Storage Period. Enter the estimated storage time, in months. This varies from case-to-case depending on entitlement circumstances and applies to new accounts being placed in storage.

(5) Block 3.j, Pickup Date (YYYYMMDD). Enter the date on which the requested services are to begin. Date must be constructed as follows: day of the month, the two digits of the month, and the four digits of the year; e.g., for September 30, 2002 the code would be "20020930".

(6) Block 4, New Accounts - Services Ordered. Enter rates from the DD Form 1162-1 only for those services being authorized. Item VI, Handling-Out, which must be used in making cost comparisons, will not be included on the initial DD Form 1164. To facilitate subsequent ordering-out action, the rate for Handling-Out (Item VI) may be annotated on the copy retained in the storage file. When crating of HHG is required for safe transportation and storage, Block 6, Remarks Section, must be annotated to show approval granted by the ordering officer.

(7) Block 6 (Remarks Section). When firearms are to be included in the storage lot, the statement, "This NTS Lot Contains Firearms," must be annotated on the DD Form 1164.

b. Distribution of DD Form 1164.

(1) A copy must be sent to the DFAS.

(2) One copy must remain with the contractor.

(3) One copy, indicating the actual weight and storage location, must be provided to the member/employee or the overseas Civilian Personnel Officer upon request or when the state of the storage changes, i.e., transfer agreement, termination of storage, conversion to member's/employee's expense, etc.

(4) One copy indicating the actual weight and storage location may be provided to the responsible RSMO contracting officer within seven working days of the date on which the actual weight is received from the contractor.

(5) One copy must be provided to the Uniform Service/Agency Finance Office or Operating Location (OPLOC).

c. Supplemental Service Orders.

(1) Supplemental DD Forms 1164 must be issued to authorize services, such as renewal or removal of a lot in storage or annual renewal of the fiscal year fund citation for the following fiscal year, for those lots remaining in storage after September 30. Renewals may be authorized by written notice to the contractor, such as manifest-type listings.

(2) When it is known prior to ordering services that part of a member's/employee's property will remain in storage while another part will be withdrawn within a short period of time, each part will be considered a separate lot and a separate DD Form 1164 must be issued for each lot. When a member/employee requests, and is entitled to, partial removal from a lot stored under a single DD Form 1164, a supplemental DD Form 1164 must be issued for handling-out services to permit removal of the desired goods from the lot and for handling-in of that portion to be returned to storage. Partial removals will consist of only complete cartons or item numbers as listed on the inventory.

7. Warehouse Receipts. Each lot of HHG stored in a commercial facility must be covered by a separate, nonnegotiable warehouse receipt. The contractor must issue the warehouse receipt in the name of the member/employee IAW the terms of the BOA. The contractor must mail, or otherwise deliver, the original and one copy of the warehouse receipt to the ordering officer. When the inventory is used as part of the warehouse receipt, a copy of the inventory may be attached to the original warehouse receipt. The use of a combination inventory-warehouse receipt form is acceptable if the document contains all of the information required by laws and the BOA. When a combination inventory-warehouse receipt is used, the original copy must be furnished to the ordering officer and a legible copy retained by the contractor.

8. Storage Outside an Installation's AOR. When a lot is placed in storage outside an installation's AOR, the ordering officer placing the lot in storage must retain the storage account and all paperwork until a application for shipment is received.

9. Removal from NTS. Whenever a lot, or part of a lot, is to be removed from storage, the ordering officer must sign and return the original warehouse receipt to the contractor along with the DD Form 1164 specifying the services to be performed. A copy of the warehouse receipt must be retained for the ordering officer's files. Whenever part of a lot is removed from storage and part is to remain, the ordering officer must obtain a new or revised warehouse receipt from the contractor for that portion remaining in storage. The NTS contractor must be given a minimum of five work days notice prior to release of shipment.

10. Removal when Storage is Outside the Installation's AOR. When a lot is placed in storage outside an installation's AOR, the ordering officer placing the lot in storage must retain all the paperwork and the storage account until the member's/employee's application for shipment is received. The ordering officer must make arrangements with the contractor for release of the goods from storage. The member's/employee's application for shipment must be forwarded to the TO having responsibility for the area in which the goods are stored. The gaining TO must arrange for shipment of the goods and must coordinate with the ordering officer.

11. Local Delivery Reweigh Procedures. If a pattern of weight variance is detected in the weight of linehaul shipments moving out of a particular warehouse, the TO must initiate local reweigh procedures.

a. The ordering officer must negotiate a rate with the storage contractor not to exceed the current rate factors of the current Personal Property Rate Solicitation. When requesting a local reweigh, cost comparisons must be accomplished to ensure use of the lowest rate or price available.

b. Local delivery reweigh requests must be annotated on the DD Form 1164. It is recommended the TO or the TOs representative witness the reweigh to support any collection action involved for either party. A witnessed reweigh will aid the RSMO contracting officer in the event of disputes as well as in monitoring performance.

c. The ordering officer may request the contractor to use Government scales for local reweigh when available and when the reweigh will not cause delay to the contractor. If the contractor is required to use Government scales and excess mileage is involved, the Government may be liable for an extra charge since the terms of the original agreement have been modified.

d. One weight ticket is necessary when a lot is ordered out of NTS locally and when delivery is within the scope of the agreement. When there is a 200 lbs variance (higher or lower), an additional weight ticket is required. This provision will not apply if weight discrepancies are due to missing items from a shipment that were a part of the weight at original pickup.

12. Storage Difficulties. Before the normal shipping season, the ordering officer must notify the RSMO contracting officer of any actual or anticipated problems in obtaining commercial storage space. An information copy of such notice must be provided to HQ MTMC. Problems that cannot be resolved by the RSMO contracting officer must be forwarded for resolution to HQ MTMC.

13. Processing NTS for Personnel Assigned PCS Overseas and Notification of Member/Employee Pending Expiration of Entitlements and Conversion of Lots to Member's/Employee's Expense.

a. Upon receipt of an application for NTS, the TO must enter the estimated storage entitlement expiration date on the DD Form 1299, Block 13. This date will be determined by adding the tour length to the reporting month cited in the orders. (Exception: Flag officers have no set tour length; however, since 48 months is a common period for assignment, 48 months must be added to the month the property is placed in storage and entered in Block 13 of the DD Form 1299.)

b. Not later than 45 days before the first day of the month when the NTS entitlement is due to expire (as noted in Block 13 of the DD Form 1299), the TO must notify the member/employee by certified letter of the impending NTS entitlement expiration. A suspense date must be established for the return of information and a suspense file maintained.

c. The notification must include:

(1) Date storage entitlement will expire.

(2) Suspense date for return of information.

(3) Net weight of HHG in storage chargeable to member's/employee's JFTR/JTR weight allowance.

(4) Storage Company's name, address, service order number, and lot number.

(5) A statement that the member/employee is to reply by the suspense date whether continued storage is required. The new PCS order, personnel action, extension document, copy of separation order; or letter explaining the member's/employee's status must be provided. DOD civilian employees must provide correspondence from their Civilian Personnel Office containing the new fiscal year fund citation for continued storage. Also state, if the member/employee fails to return the letter to the TO advising of his or her status before the date NTS entitlement is due to expire, the Government's responsibility for control and payment for NTS must be terminated and the lot converted to a commercial account in the member's/employee's name at his or her expense. He or she will then be responsible directly to the commercial contractor for storage costs.

d. If the certified letter notice is not returned with notations by the established suspense date, the TO must contact the military Service/Agency personnel locator office to make a final attempt to locate the member/employee. When all notification and locator efforts have failed, the TO must take necessary steps to convert the lot to the member's/employee's expense.

D. LOSS AND DAMAGE IN NTS

1. General. This Paragraph prescribes procedures to be followed by contracting and ordering officers when incidents of loss or damage of stored HHG occur.

2. Loss/Damage or Erroneous Shipments. If the contractor is unable to locate a lot or portion of a lot in storage, the TO and/or ordering officer must notify the contracting officer/RSMO who must ensure the contractor is taking action to locate any missing items and collect information for contract interpretation which might be needed in the event of claims processing.

3. Missing Items. When missing items subsequently are found to be in the possession of the contractor, the contractor will contact the owner to determine if the owner has been paid a claim for the lost items and if the member/employee would like to receive any or all of the found items. If the member/employee has been paid for the items by the Government or by a contractor, the member/employee may elect to recover any or all of the items but will have to return the payment received for the items that are recovered. If the member/employee elects to take back an item, the contractor must forward the items to the member/employee by the mode of transportation selected by the ordering officer. The contractor must be responsible for any shipping charges in excess of the original cost had the delay not occurred. If the member/employee has received a claim payment of the item and does not elect to take back the item, the contractor may retain the item for salvage provided the contractor has paid the replacement cost of the item to the Government or the member/employee. If the contractor has

not paid for the item and the Government has paid the member's/employee's claim, the contractor must contact the claims office for instructions.

4. Delivery of Wrong Items. If a contractor inadvertently ships or delivers wrong items, the contractor is liable for all excess costs associated with the return. The contractor must select the mode of transportation offering the least amount of delay. Compensation to the contractor will not be more than the original cost.

5. Lost or Stolen POF. If a POF is lost or stolen while under the control of the warehouse, the RSMO must determine whether the firearm was stored IAW the preaward survey guidelines and whether the loss was due to negligence of the warehouse. The failure of a contractor to report promptly a lost or stolen firearm will result in the issuance of a cure notice by the RSMO contracting officer.

6. Contracting Officer Procedures. Upon becoming aware of loss or damage to stored HHG due to fire, flood, or similar causes, the contracting officer, in coordination with the ordering officers, must:

a. Arrange immediately for a joint inspection of the damage. Notify the RSMO immediately. The RSMO will notify MTMC who in turn will notify the Services.

b. Direct the contractor to unpack and dry the goods and prepare a detailed report of loss or damage to each lot, by article or package, as listed on the warehouse receipt or inventory form.

c. Monitor closely the contractor's performance to ensure that:

(1) The contractor's responsibility is discharged properly.

(2) The property is protected from further loss or damage.

(3) The contractor maintains detailed records of all services performed and materials used that are to be paid for by the Government.

(4) The contractor promptly dries, cleans, and repacks all of the items that are handled during the rework process.

(5) The contractor's security measures will protect the goods from pilferage.

d. Request that the ordering officer engages a third party if the contractor does not have the capability to provide the required services.

e. Determine the contractor's liability under the terms of the BOA. All available means, including assistance from ordering officers, qualified organizations, and consultation with an attorney in the MTMC legal office, must be used in determining liability. The contracting officer must prepare a report of each case IAW Chapter 410, Paragraph D.

7. Ordering Officer Procedures. Upon completion of the inspection of loss or damage, the ordering officer must:

a. Direct the contractor to perform services such as laundering, dry cleaning, and oiling finished surfaces, if such actions are required to prevent further damage to, or deterioration of, the affected goods. Reconditioning of property, such as recovering upholstered pieces and refinishing finished articles, may not be performed as part of the services to prevent further damage or deterioration.

b. Inform the contractor of the method to be used in determining the new weight of lots when items have been lost or destroyed. When the new weight has been determined, the ordering officer must issue a DD Form 1164.

c. Advise the member/employee in writing of any loss or damage to the member's/employee's goods.

d. Furnish the responsible RSMO contracting officer a copy of the report given to the member/employee.

e. Obtain the consent of the member/employee or the member's/employee's authorized agent before ordering the disposal of any damaged goods. Upon receipt of consent, the ordering officer will direct the contractor in the disposal of irreparably damaged goods.

8. Payment for Services. The unpacking, drying, and cleaning of damaged goods and preparation of the report of loss or damage must be performed by the contractor at no cost to the Government. All other services performed, such as dry cleaning, laundering, repacking, and handling-in, when ordered by the ordering officer, must be paid for by the Government at no cost to the contractor until ultimate liability for the loss or damage is determined. Payment for these services must be made from the appropriation cited for payment of the storage charges.

9. Payment for Repacking of Shipments Released from NTS.

a. Shipments packed for placement in NTS may not be repacked at Government expense in preparation for linehaul movement without specific authorization from the origin TO. The origin TO must authorize repacking at Government expense only when it is determined to be necessary to protect the shipment from damage in transit to the final destination.

b. The TO may not authorize repacking at Government expense when there is evidence that deterioration of the original packing occurred while the shipment was in the possession of the storage contractor. Repacking to correct packing deterioration occurring during storage is the responsibility of the storage contractor and must be accomplished at no expense to the Government. Conflicts in this area must be referred by the TO to the responsible RSMO contracting officer for resolution.

c. The linehaul carrier will not be liable for preexisting damage noted on the storage inventory or exceptions noted at the time of pickup. The carrier must be liable for concealed damage. To be released from liability, the burden of proof must be on the carrier to show that loss or damage resulted before receipt of property by the linehaul carrier.

TEMPORARY COMMERCIAL STORAGE AT GOVERNMENT EXPENSE

PRIVACY ACT STATEMENT

AUTHORITY: Title 37, US Code 406; Title 5, US Code 5726; and EO 9397, November 1943 (SSN).

PRINCIPAL PURPOSE(S): To obtain certification from the member as to why temporary storage in addition to 90 days is required.

ROUTINE USE(S): The data obtained on this form is used by the installation transportation officer to determine whether or not the member is entitled to additional temporary storage after the initial 90 days.

DISCLOSURE: Voluntary, however, unless disclosed, member will not be authorized additional storage.

SECTION I - AUTHORIZATION FOR STORAGE AFTER THE FIRST 90 DAYS

Reference Paragraph U5375-B2, JFTR

When, because of conditions beyond the control of the member, household goods in temporary storage at Government expense cannot be withdrawn during the first 90 days, additional storage for not more than an additional 90 days may be authorized in advance or subsequently approved by the transportation officer or such other officer as the service may designate.

SECTION II - MEMBER'S STATEMENT OF FACTS

1. ADDITIONAL TEMPORARY STORAGE OF MY HOUSEHOLD GOODS IS NECESSARY, DUE TO CONDITIONS BEYOND MY CONTROL. THESE CONDITIONS ARE *(X all that apply)*

	a. SERIOUS ILLNESS OF THE MEMBER		e. NONAVAILABILITY OF SUITABLE CIVILIAN HOUSING
	b. SERIOUS ILLNESS OR DEATH OF A DEPENDENT		f. AWAITING COMPLETION OF RESIDENCE UNDER CONSTRUCTION
	c. IMPENDING ASSIGNMENT TO GOVERNMENT QUARTERS		g. OTHER REASON *(Specify)*
	d. DIRECTED TEMPORARY DUTY AFTER ARRIVAL AT PERMANENT DUTY STATION		

2. MEMBER INFORMATION

a. NAME *(Last, First, Middle Initial)*	b. RANK	c. SOCIAL SECURITY NUMBER
d. SIGNATURE		e. DATE SIGNED *(YYYYMMDD)*

SECTION III - APPROVAL

3. INSTALLATION NAME	4. INSTALLATION ADDRESS *(Include Zip Code)*	5. DATE APPROVED *(YYYYMMDD)*

6. APPROVAL FOR AN ADDITIONAL 90 DAYS STORAGE IS GRANTED IN ACCORDANCE WITH PARAGRAPH U5375-B2, JFTR, DUE TO CONDITIONS CITED ABOVE.

7. I CERTIFY THAT GOVERNMENT STORAGE FACILITIES ARE NOT AVAILABLE AT THIS INSTALLATION AND THAT COMMERCIAL STORAGE IS AUTHORIZED FOR A PERIOD NOT TO EXCEED 90 DAYS.

8. ALL STORAGE AUTHORIZATION WILL EXPIRE ON *(YYYYMMDD)* _____

Generally, Government claims coverage also expires that date. If you choose to keep your property in storage beyond that date, at your expense, it is recommended that you obtain private insurance coverage during that period. In addition, any claim against the Government for loss or damage to personal property pursuant to authorized Government storage must be filed within two years from the expiration date of authorized storage.

9a. APPLICABLE SPECIAL ORDER	b. PARAGRAPH	c. HEADQUARTERS	d. DATED *(YYYYMMDD)*
e. ACCOUNTING CLASSIFICATION			

10. TRANSPORTATION OFFICER INFORMATION

a. NAME *(Last, First, Middle Initial)*	b. RANK
c. TITLE	d. SIGNATURE

DD FORM 1857, SEP 1998 (EG) PREVIOUS EDITION IS OBSOLETE.

Figure 406-1. DD Form 1857, Temporary Commercial Storage at Government Expense

INBOUND ARRIVAL/EXPIRATION NOTICE

SCOTT AFB
TRAFFIC MANAGEMENT OFFICE
ATTN: LGTT-I
SCOTT AFB, IL 62225-5010

15 MAR 01

1. Reference your personal property shipment:
   A. HOUSEHOLD GOODS
   B. PICKED UP FROM 69469 LUTZELSACHSEN, GERMANY
   C. GBL NUMBER XX-000000
   D. UNDERFANGER MOV AND STG INC, at 217-555-1711
   E. REFERENCE SIT NUMBER(S) 0000000

2. Your shipment arrived in this area on 15-MAR-01. Please contact this office at 618-555-5249 with disposition instructions at the earliest possible time.

3. This shipment has been placed into TEMPORARY STORAGE which has an EXPIRATION DATE OF 13-JUN-01. This shipment will convert to your expense as of midnight on that date. If extension of storage is requested, please sign as indicated in the First Endorsement on the 2nd page of this letter. An approved/disapproved copy of this letter will be returned to you. If approved, please note the NEW DATE OF EXPIRATION.

4. Examples of legitimate reasons for extending storage entitlements are:
   A. Serious illness of the member.
   B. Serious illiness or death of a dependent.
   C. Impending assignment to government quarters.
   D. Directed temporary duty after arrival at your permanent duty station.
   E. Nonavailability of suitable civilian housing.
   F. Awaiting completion of residence under construction.
   G. Other reason (Act of God, etc.)

William Gazdagh , GS-12
GS-12 USAF
TRAFFIC MANAGEMENT OFFICER

Figure 406-2. Inbound Arrival/Expiration Notice

REQUEST FOR EXTENSION OF STORAGE IN TRANSIT(SIT)

****

Privacy Act Statement

AUTHORITY: Title 37, US Code 406; Title 5, US Code 5762; and EO 9397, November 1943 (SSN).

PRINCIPLE PURPOSE: To obtain certification from the member as to why temporary storage in addition to 90 days is required.

ROUTINE USE: The data obtained on this form is used by the installation transportation officer to determine whether or not the member is entitled to additional temporary storage after the initial 90 days.

DISCLOSURE: Voluntary, however, unless disclosed, member will not be authorized additional storage.

****

1ST Endorsement DATE: _____

TO: SCOTT AFB
SCOTT AFB, IL 62225-5010

I request additional storage for reason(s) circled on the first page of this notification.

Contact Telephone Number(s): _____ _____
Home Duty

Temporary Address: _____

_____

_____
Member's Signature / Member's SSN

****

2ND Endorsement DATE: _____

TO: Lola Hamilton

( ) Your extension of storage has been approved and your NEW EXPIRATION DATE is _____. Generally, Government Claims Coverage also expires that date. If you choose to keep your property in storage beyond that date, at your expense, recommend you obtain private insurance coverage during that period. In addition, any claim against the Government for loss or damage to personal property pursuant to authorized government storage must be filled within two years from the expiration date of authorized storage.

( ) Your extension of storage has been denied. Please contact UNDERFANGER MOV AND STG INC, at 217-555-1711 to make arrangement for payment of storage as well any insurance you might need on this shipment. You are still entitled to a final delivery and need to contact this office to make those arrangements.

William Gazdagh, GS-12
TRAFFIC MANAGEMENT OFFICER

Copy For:
File
UNDERFANGER MOV AND STG INC

Figure 406-3. Request for Extension of Storage in Transit (SIT)

SCHEDULE OF SERVICES AND RATES FOR HOUSEHOLD GOODS

Rates listed in this schedule shall be inclusive of all charges for labor, materials, vans and equipment and incidental facilities and services necessary for the performing of the storage and related services specified in this schedule. All services to be performed under this schedule should be in accordance with requirements for services for storage of household goods. All service orders are subject to a minimum weight of 500 pounds.

1. BASIC ORDERING AGREEMENT NUMBER	2. MODIFICATION NUMBER	3. EFFECTIVE DATE *(YYYYMMDD)*

4. SERVICE PERFORMED

a. TITLE	b. DESCRIPTION		c. RATE
(1) ITEM I PACKING	Packing and protection as required by and incident to drayage, marking, tagging and inventorying for storage. (Includes flat wardrobe cartons) *(Rate per cwt.)*		$
(2) ITEM II SPECIAL SERVICE	(a) Wardrobes: Upright wardrobes with minimum 18 inch bar. *(Cost each)*		$
	(b) Inventory of high value items as declared by the member or his agent. *(Cost per inventoried carton)*		$
(3) ITEM III DRAYAGE	Pickup at location, loading, weighing, drayage to warehouse and unloading onto warehouse platform. *(Rate per cwt.)*	ZONE	
		1	$
		2	$
		3	$
		4	$
		5	$
		6	$
(4) ITEM IV HANDLING IN	Handling in, labor and equipment required to place in storage from warehouse platform, wrapping for storate which is in addition to that required for drayage to contractor's warehouse and preservation of items for and during the storage period. *(Rate per cwt.)*		$
(5) ITEM V STORAGE	Storage per Clause H-5, Basic Ordering Agreement *(Rate per cwt. per month)*		$
(6) ITEM VI HANDLING OUT	Handling out, labor and equipment required to remove from storage and place onto warehouse platform. *(Rate per cwt.)*		$
(7) ITEM VII DELIVERY	Delivery, to include loading at contractor's warehouse platform and drayage to destination, unloading, including the placing in appropriate rooms in accordance with specifications *(Rate per cwt.)*	ZONE	
		1	$
		2	$
		3	$
		4	$
		5	$
		6	$
(8) ITEM VIII UNPACKING	Unpacking, including unpacking all barrels, crates, cartons, recording overage, shortage or damage found while unpacking, removing from owner's residence all empty containers, packing materials and other debris accumulated incident to unpacking in accordance with specifications. *(Rate per cwt.)*		$

5. SERVICE AREA. This agreement covers orders placed by using activities within the following area.

6. GEOGRAPHIC DESCRIPTION OF EACH ZONE SHOWN IN ITEMS III AND VII ABOVE

a. ZONE 1	b. ZONE 2
c. ZONE 3	d. ZONE 4
e. ZONE 5	f. ZONE 6

7. CONTRACTOR CERTIFICATION STATEMENT

I certify that I hold a valid operating permit/certificate for the zones on which I have submitted rates.

a. TYPED NAME *(Last, First, Middle Initial)*	b. SIGNATURE

DD FORM 1162-1, SEP 1998 (EG) PREVIOUS EDITION IS OBSOLETE. Designed using Perform Pro, WHS/DIOR, Sep 98

Figure 406-4. DD Form 1162-1, Schedule of Services and Rates for Household Goods

SERVICE ORDER FOR PERSONAL PROPERTY

1. TO *(Contractor)*	2. FROM *(Ordering Office)*
a. NAME	a. NAME
b. ADDRESS *(Street, City, State, ZIP Code)*	b. ADDRESS *(Street, City, State, ZIP Code)*

3. THIS SERVICE ORDER IS ISSUED AND AN ORDER IS HEREBY PLACED WITH YOU, ACCEPTING YOUR OFFER (ORAL OR WRITTEN) FOR SERVICES ON *(enter date)* _____, _____, SUBJECT TO THE PROVISIONS OF THE BELOW-NUMBERED BASIC ORDERING AGREEMENT FOR THE FOLLOWING SERVICES:

a. SCAC CODE	b. FEDERAL AGENCY	c. APPROPRIATION IDENTITY	d. BASIC ORDERING AGREEMENT NUMBER	e. MODIFICATION NUMBER

f. SERVICE ORDER NUMBER	g. LOT NUMBER	h. LOCATION OF PROPERTY *(Street, City, State, ZIP Code)*
(1) OLD		
(2) NEW		

i. ESTIMATED STORAGE PERIOD	j. PICK-UP DATE *(YYYYMMDD)*	k. STORAGE EXPIRATION DATE *(YYYYMMDD)*	l. ESTIMATED WEIGHT	m. WEIGHT IN STORAGE *(ACTUAL)*

n. OWNER

(1) NAME *(Last, First, Middle Initial)*	(2) PERMANENT ADDRESS *(Street, City, State, ZIP Code)*
(3) PAY GRADE / (4) SSN	

4. NEW ACCOUNTS - SERVICES ORDERED

a. PACKING ITEM I	b. SPECIAL SERVICES (1) WARDROBE - ITEM IIA		(2) EXPENSIVE/VALUABLE ITEM - ITEM IIB		c. DRAYAGE-IN ITEM III		d. HANDLING-IN ITEM IV	e. STORAGE ITEM V
RATE	NO.	RATE	NO.	RATE	ZONE	RATE	RATE	RATE
$		$		$		$	$	$

5. REMOVAL ACTIONS

a. APPROPRIATION IDENTITY	b. STORAGE REMOVAL DATE *(YYYYMMDD)*	c. DELIVERY ADDRESS *(Street, City, State, ZIP Code)*

d. SERVICES ORDERED

(1) HANDLING IN ITEM IV	(2) HANDLING OUT ITEM VI	(3) DRAYAGE-OUT ITEM VII		(4) UNPACKING ITEM VIII	(5) WEIGHT REHANDLED	(6) WEIGHT REMOVED	(5) WEIGHT REMAINING
RATE	RATE	ZONE	RATE	RATE			
$	$		$	$			

6. REMARKS

7. SPECIAL INSTRUCTIONS

a. MAIL INVOICES TO:

b. STORAGE AUTHORITY:

c. MAXIMUM WEIGHT CHARGEABLE TO GOVERNMENT _____ LBS. Weight in excess of such maximum will be charged to the owner.

d. ESTIMATED COST OF THE SERVICES IS $ _____. You are not to perform any service which will result in contract costs in excess of the above sum, unless authorized in writing by the ordering officer.

e. ACCOUNTING CLASSIFICATION:

8. CERTIFICATION *(To be completed by Ordering Office)*
Commercial storage has been determined to be more economical than government storage.

a. TYPED NAME *(Last, First, Middle Initial)*	b. TITLE	c. SIGNATURE	d. DATE SIGNED *(YYYYMMDD)*

DD FORM 1164, SEP 1998 (EG) PREVIOUS EDITION IS OBSOLETE. COPY DESIGNATION: ☐ Original ☐ 2 ☐ 3 (X) ☐ 4 ☐ 5 ☐ 6 ☐ 7
Designed using Perform Pro, WHS/DICR, Sep 98

Figure 406-5. DD Form 1164, Service Order for Personal Property

PRE-AWARD SURVEY OF CONTRACTOR'S/CARRIER'S FACILITIES AND EQUIPMENT — DATE: *(Yr/Mo/Day)*

INSTRUCTIONS: *THIS SELF EXPLANATORY FORM IS TO BE COMPLETED IN DUPLICATE FOR EACH WAREHOUSE OR SPECIFIC AREA THEREOF IN WHICH HOUSEHOLD GOODS ARE TO BE STORED. THE ORIGINAL TO BE RETAINED BY THE RESPONSIBLE ACTIVITY. DUPLICATE TO THE CONTRACTOR/CARRIER.*

NAME AND ADDRESS OF FIRM *(Include ZIP code)* — SCAC:

NAME OF OPERATING EXECUTIVE:

PHONE: *(Include AREA CODE)*
Business: Home:

ADDRESS OF STORAGE LOCATION *(Include ZIP Code)*

WAREHOUSE NUMBER — AREA *(Floor, Fire Division, etc.)*

WAREHOUSE LICENSE NO. — OPERATING AUTHORITY

OPEN FOR BUSINESS *(Hours and days of week)*

CONSTRUCTION OF BUILDING

WALLS

ROOF

FLOOR(S) — NUMBER OF FLOORS

BASEMENT

GIVE NARRATIVE DESCRIPTION OF BUILDING *(Use reverse for diagram of storage area, if desired.)*

TOTAL STORAGE SPACE *(Square feet)*

PICKUP AND DELIVERY EQUIPMENT

NUMBER OF TRUCKS	TYPE OF TRUCKS

OWNERSHIP OF BUILDING

☐ OWNED ☐ LEASED (If leased complete the following and attach a copy of lease.)

LEASE EXPIRES: PHONE:

NAME AND ADDRESS OF OWNER: *(Include ZIP CODE)*

FIRE PROTECTION

FIRE CONTENTS RATE (Based upon 80 percent co-insurance per $100 per year.) **NOT APPLICABLE**

DOD FIRE CLASSIFICATION CODE — WEIGHT LIMITATIONS *(LBS)*

NUMBER OF MILES TO NEAREST FIRE DEPARTMENT:

NEAREST FIRE HYDRANT — NUMBER OF FEET FROM BUILDING: — POUNDS OF PRESSURE: — ☐ ADEQUATE ☐ INADEQUATE

DESCRIBE FIRE PROTECTION SYSTEM

FREQUENCY OF TEST/INSPECTION:

MAINTENANCE CONTRACT WITH:

SCALES

TYPE AVAILABLE: — DISTANCE FROM BUILDING *(MILES)*

CERTIFIED YES NO — CAPACITY

STORAGE METHODS *(Give brief description)*

RUGS

UPHOLSTERED FURNITURE

PIANOS

FIREARMS SECURITY

OTHER PROPERTY

HAZARDOUS OPERATIONS *(Describe operations in or near building which may be hazardous to stored property.)*

TYPE OF PROGRAM FIRM HAS FOR RODENT AND/OR INSECT CONTROL

(CHECK "YES" OR "NO" AS APPROPRIATE)

CATEGORY OF BUSINESS	YES	NO
MINORITY BUSINESS ENTERPRISE		
SMALL BUSINESS CONCERN		
FIRE EXTINGUISHERS		
IS THERE A SUFFICIENT NUMBER?		
ARE THEY THE PROPER TYPE?		
ARE THEY REGULARLY INSPECTED AND MAINTAINED?		
FIRE FIGHTING PLAN		
IS A FIRE FIGHTING PLAN POSTED?		
ARE ALL EMPLOYEES FAMILIAR WITH THE PLAN?		
CLIMATE PROTECTION		
IS BUILDING PROTECTED FROM EXTREME COLD?		
IS BUILDING PROTECTED FROM EXTREME HEAT?		
IS BUILDING PROTECTED FROM EXTREME HUMIDITY?		
IS VENTILATION ADEQUATE?		
ARE UTILITIES AND OTHER SYSTEMS SERVICED AT LEAST ANNUALLY?		
MATERIAL HANDLING EQUIPMENT		
IS THE EQUIPMENT PROPERLY MAINTAINED?		
SMOKING		
ARE "NO SMOKING" SIGNS POSTED?		
IS "NO SMOKING" POLICY ENFORCED?		
HOUSEKEEPING		
IS BUILDING AND OUTSIDE AREA NEATLY KEPT AND FREE FROM HAZARDOUS MATERIALS?		
ARE COMBUSTIBLE WASTE MATERIALS STORED AT LEAST 50 FEET FROM FACILITY?		
SECURITY		
IS BUILDING EQUIPPED WITH BURGLAR ALARM?		
IS A WATCHMAN ON DUTY?		
DO POLICE PATROL THE AREA?		
ARE DOORS AND WINDOWS ADEQUATELY PROTECTED?		
IS SEPARATION FROM JOINT OPERATION OCCUPANT, IF ANY, ADEQUATE? *(See "Hazardous Operation" below.)*		
FLOODING		
IS BUILDING SUBJECT TO FLOODING?		

I certify that I have inspected the above described facility and find that, to the best of my knowledge, the information herein is true and correct.	**SIGNATURE** *(Inspecting Officer)*	**DATE** *(Yr/Mo/Day)*
I certify that the conditions and policies of this warehouse are, to the best of my knowledge, as indicated above.	**SIGNATURE** *(Warehouseman)* **	**DATE** *(Yr/Mo/Day)*
I certify that I have reviewed this survey and ☐ ***APPROVE,*** ☐ ***REJECT*** *the facility for storage of household goods.*	**SIGNATURE** *(Contracting Officer/Trans. Officer)*	**DATE** *(Yr/Mo/Day)*

DD FORM 1811 1 JUN 79 — **Type Form** — **** Sign and date.** — #5

Figure 406-6. DD Form 1811, Pre-Award Survey of Contractor's/ Carrier's Facilities and Equipment

STORAGE FACILITY RATES

Service	Government Storage	Commercial Storage (Basic Ordering Agreement)
Packing and protection required by and incident to drayage, marking, tagging and inventorying for storage (includes flat wardrobes) (rate per cwt.). Wardrobes: Upright wardrobes with minimum 18 inch bar. (cost each). Inventory of high value items. (Cost per inventoried carton)	Per local packing and crating contract.	Item I and II Schedule of Packing and Special Services.
Pickup at location, loading, weighing, drayage to warehouse and unloading onto warehouse platform. (Rate per cwt.)	Local contract and/or prevailing local commercial drayage rates. (If linehaul is involved, drayage may not apply and Military Rate Tender (MRT) or tariff rates apply.)	Item III Drayage.
Handling in, labor and equipment required to place in storage from warehouse platform, wrapping for storage which is in addition to that required for drayage to Contractor's warehouse and preservation of items for and during the storage period. (Rate per cwt.)	Costs	Item IV Handling In.
Storage per Clause H-4, Basic Ordering Agreement (Rate per cwt. per month)	Space rate factor.	Item V Storage.
Handling out, labor and equipment required to remove from storage and place onto warehouse platform. (Rate per cwt.)	Costs.	Item VI Handling Out.

Figure 406-7. Storage Facility Rates

CHAPTER 407

MOBILE HOMES

A. GENERAL

1. The contents of this Chapter apply to the movement of privately owned mobile homes within CONUS, between CONUS and Alaska, and within Alaska.

2. Shipping costs must not exceed what it would have cost the Government to ship the member's/employee's authorized weight allowance of HHG. Shipment options are:

a. Member/Employee Tow. The member/employee tows the mobile home and files for reimbursement.

b. Government Arranged. The member/employee makes arrangements through the TO.

c. Personally Procured. The member/employee obtains authorization from the TO and draws an advance mobile home allowance.

B. COUNSELING

1. Refer to DoD Gen 43/DA Pam 740-2/NAVSUP 591/AFJPAM 24-225/MCO 4600.35C/COMDTPUB P4640.4, Moving Your Mobile Home (http://www.belvoir.army.mil/jppsowa/HomeCore.htm, click on JPPSOWAFAQ's and Moving Your Mobile Home) and Figure 407-4.

2. The TO must provide the information contained in the counseling checklist DD Form 1797 (See Figure 401-6).

3. For articles restricted for transport, refer to the Mobile Home/Boat Rate Solicitation (https://www.mtmc.army.mil), then select Personal Property, Domestic, and Mobile Home/Boat Solicitation.

C. RATES

1. OTO rates for the movement of mobile homes are obtained from HQ MTMC/MTPP-HR. Refer to the Mobile Home/Boat Rate Solicitation for all carrier responsibilities and procedures. Local moves may be handled by the TO, except volume moves.

2. The following information pertains to mobile home one-time-only (MOTO) rates:

a. The TO responsible for shipping the mobile home must provide HQ MTMC/MTPP-HR the complete information contained in the MOTO Message Request Format (Figure 407-1).

b. MOTO requests must be made as soon as possible, but not less than 20 days prior to the pickup date. (Emergency requests must be handled as required.)

c. Shipments must be tendered to the carrier prior to the tender expiration date. A tender is valid for 30 days and can be extended. In the event that certain conditions (e.g., repairs, etc.) prevent pickup, HQ MTMC/MTPP-HR must be notified by the TO so action can be taken.

d. The TO, upon request of the member/employee, may authorize the carrier to perform additional requirements not included in the MOTO rate, either by third-party service or negotiated rate. Services performed must be listed on DD Form 1863, Accessorial Services-Mobile Home (Figure 407-2), and certified by the TO or member/employee and shown on the PPGBL.

e. The TO must notify the mobile home carrier immediately and notify HQ MTMC/MTPP-HR on all cancellations of MOTO movements. If cancellations are made less than 48 hours (not including weekends and holiday hours) prior to pickup (time begins at 0800 Eastern Standard/Daylight Savings Time on the date of pickup), the carrier may bill for services ordered but not used.

3. Volume Movements.

a. A movement of five or more mobile homes from the same origin or commuting area to the same destination or commuting area is considered a volume move.

b. The TO must submit a request for a volume move to HQ MTMC/MTPP-HR at least 30 days prior to the scheduled pickup date of the first shipment. The TO must provide a copy of the request to the destination TO. The required format is provided in Figure 407-3.

D. CARRIER OR AGENT FACILITIES

DOD-approved mobile home carriers are not required to have an agent or carrier-operated facility within the AOR of an installation to be qualified to participate in mobile home traffic. A carrier may designate any DOD-approved storage facility.

E. AUTHORIZATION OF ACCESSORIAL SERVICES

1. The TO may authorize additional accessorial services, at the member's/employee's request.

2. Any repairs or other services necessary for the movement of a mobile home must be identified by the carrier on a DD Form 1863, supported by signed receipts for each repair or service provided. DD Form 1863 entries must be itemized and supported with third-party invoices indicating costs for labor and material separately. The member/employee or destination TO must verify that the services are described correctly and supported properly before signing the DD Form 1863.

F. SHIPMENT PROCEDURES

1. When a mobile home is not ready for pickup within 48 hours of the agreed date, the TO must notify the carrier of the delay. A new pickup date must be established based upon the date the mobile home will be ready for movement, the member's/employee's requirements, and the

carrier's capability. Shipments must be tendered to the carrier prior to expiration date (30 days from original solicitation pickup date).

2. Repairs and Services En Route to Destination.

a. The carrier is authorized to incur expenses up to $150 per shipment without the prior approval of the member/employee for necessary repairs and services while en route to destination. Such repairs and services do not include expenses for tire repair or replacement.

b. The member/employee must authorize, in writing, on the reverse of the Mobile Home Counseling Checklist (Figure 407-4), any amount in excess of $150 that the carrier may incur for repairs and services without first obtaining authorization from the member/employee. The origin TO, based on the member's/employee's written authorization, will authorize the carrier to incur expenses above the $150 limit, but not to exceed the amount specified by the member/employee. The amount specified by the member/employee must be annotated in the remarks blocks of both the PPGBL and DD Form 1863.

c. Should the cost of repairs or services exceed the authorized limit, the carrier must contact the origin or destination TO. The TO must contact the member/employee to determine whether the movement of the shipment should continue.

3. DD Form l412, Inventory of Articles Shipped in House Trailer. The carrier must prepare and distribute DD Form 1412 (Figure 407-5) IAW the rate solicitation.

4. DD Form 1800, Mobile Home Inspection Record (Figure 407-6) describes a mobile home's condition before and after shipment. The origin TO must prepare a DD Form 1800 for each mobile home shipment and deliver that document to the carrier with the PPGBL. The carrier completes the origin portion of the form at the time of pickup. The carrier at destination must complete the destination portion. Sections of the form are reserved for the origin and destination TOs when a visual inspection of the mobile home is made by the TO.

a. Preparation by the Origin TO. Upon notification from the member/employee that all pre-move requirements have been completed, the TO prepares an original and five copies of DD Form 1800. The origin TO must complete Part I, II, and the origin portion of Part III.

b. Carrier Entries. If the member/employee does not agree with the carrier's description of the mobile home's condition at origin or destination, the member/employee must list exceptions on the reverse of the form. Regardless of exceptions taken, the member/employee must sign the form.

c. Distribution. After completing the portions of the inspection form, the carrier must make distribution IAW the rate solicitation. The destination TO must forward one copy, along with the completed DD Form 1799, Member's Report on Carrier Performance--Mobile Home, (Figure 407-7), to the origin TO. The origin TO uses these documents to close out the shipment performance file.

5. DD Form 1840/1840R (Figures 401-4 and 401-5) must be used to record all loss or damage to each article listed on the inventory. The procedures in Chapter 410, Paragraph B, apply.

6. The destination TO completes Section I, DD Form 1799, and provides it to the member/employee during the destination inspection. The member/employee must be instructed to return the form to the destination TO within 10 days.

7. Carrier Refusal of Shipment Due to Mobile Home Being Not Road-Worthy. If the carrier's inspection or a Government inspector reveals a deficiency and renders the mobile home unsafe or unlawful for transportation, the origin TO must be notified and must instruct the member/employee to have the deficiency corrected. If correction is not possible before or on the agreed date of pickup, the decision must be made by the TO and the member/employee to either authorize payment for waiting time of the driver (and possibly an escort) while repairs, alterations, or modifications are being completed or to terminate the PPGBL and pay an attempted pickup charge. If the driver elects to perform the necessary work, waiting time is not authorized; however, the member/employee is responsible for furnishing the required materials and/or supplies to make the mobile home road-worthy. Under no circumstance may the TO release the mobile home for shipment until it is considered by both the carrier and the TO to be safe and practicable to move.

8. Use of Commercial Wrecker Service.

a. The member/employee must inform the TO when a wrecker service may be required at origin. The carrier must inspect the ground leading to and under the mobile home to determine whether the mobile home may be moved safely. If ground conditions are such that the mobile home may be damaged by the carrier's equipment, the carrier must contact the TO and request authorization to use a commercial wrecker service.

b. When it is determined that a commercial wrecker service is required, the TO will authorize the carrier to make the necessary arrangements. The carrier will bill the Government for the actual cost of service. The commercial wrecker service invoice must be attached according to billing instructions.

9. Transit Load Limitations.

a. The design and construction of a mobile home only allows for the weight of all fixed service equipment, plumbing fixtures, heating and air conditioning equipment, appliances, and built-in furniture.

b. In the movement of a mobile home, the manufacturer's recommended gross weight must not be exceeded. If the recommended gross weight is unknown, an allowance of three lbs per square foot of unused (open) floor area may be permitted for the added weight of items to be left in the mobile home during movement, as determined by the carrier.

c. If the mobile home exceeds the manufacturer's recommended gross weight, the member must be provided the opportunity to arrange for a separate shipment of excess items or to dispose of them by some other means. See the JFTR, par. U5330-F5, HHG Removed from

Mobile Home to Meet Safety Requirements. NOTE: There is no authorization to ship HHG separate from the mobile home for civilians. Any cost incurred is borne by the employee for this service.

10. Termination of Mobile Home Shipment. A shipment must be terminated when ordered by the TO. Termination of service is normally used in cases of violation of federal, state, or local laws; violation of TOS; improper performance of service; or cancellation of member's/employee's orders. The following applies:

a. Any charges for authorized services, performed to point of termination, must be paid IAW the rate tender.

b. SIT charges must be paid when authorized by the TO.

c. A termination of service that requires the transfer of a mobile home from one carrier to another must be coordinated with HQ MTMC/MTPP-HR. At the time of transfer, each carrier must verify the inventory and note any damage to the mobile home. The TO must issue a new PPGBL to the new carrier that cross-references the PPGBL of the terminated carrier.

d. Upon receipt of the termination notice, the carrier must advise the TO the location of the shipment and effect the required change in the documentation. The TO must issue a PPGBL Correction Notice to show the termination point and correct the rate and notify HQ MTMC/MTPP-HR.

11. Third Party Services. When requested and approved by the TO, the carrier must arrange for third party services not included in the MOTO rate.

G. SIT

1. Authorization for SIT. The location of the SIT facility will be at the discretion of the carrier, but must be so located to the required destination to afford timely delivery to the employee/member and must be authorized/approved for use by a TO. Refer to the PPCIG for a listing of approved SIT facilities (www.mtmc.army.mil then select Personal Property, Domestic or International, and Consignment Instruction Guide (PPCIG-OL)).

a. Origin. SIT may be used only when authorized by the TO and annotated on the PPGBL or DD Form 1863.

b. En Route. If an approved DOD SIT facility is not available at origin or destination, the TO must coordinate efforts with the carrier to use any DOD-approved SIT facility along the proposed route of movement. The TO originating the shipment must serve as the POC with the carrier until the shipment arrives in the destination TO's AOR.

c. Destination. When the carrier notifies the destination TO of the arrival of the mobile home and the member/employee cannot be contacted, the destination TO must issue a SIT control number to the carrier. The SIT location, the SIT control number, and the date the shipment is placed in SIT must be entered on the DD Form 1863.

2. Withdrawal of HHG from SIT Facility. Members may withdraw HHG from the mobile home while it is in SIT provided coordination is accomplished with the TO. However, movement of the HHG withdrawn must be accomplished by the member/employee at no expense to the Government.

3. Delivery Out of SIT. When requested by the member/employee, the TO who has control of shipment must contact the carrier for delivery. The TO must complete the SIT block of the DD Form 1863.

H. SHIPMENT TO AND WITHIN ALASKA

1. Mobile Home Problems in Alaska.

a. Mobile homes constructed with sufficient insulation to afford protection from the cold in the CONUS may be insufficient during the lengthy cold weather periods in Alaska, where temperatures often reach minus 50 degrees or lower. The member/employee must be advised of the strict construction standards that apply to mobile homes entering Alaska. A member applying for shipment must produce a document indicating the mobile home complies with the State of Alaska specifications. Information concerning Alaska standards can be obtained from the State of Alaska, Department of Commerce, Weights and Measures, 2263 Spenard Road, Anchorage, AK 99503-5000.

b. Consignment Instructions. Shipments of mobile homes from CONUS to Alaska must be consigned IAW the PPCIG.

2. Shipments within Alaska. Intrastate mobile home shipments in Alaska are governed by the CONUS movements procedures and IAW specific state regulatory agencies.

I. QUALITY CONTROL

The TO must inspect as many mobile home shipments as possible originating and terminating within the TO's AOR.

J. CARRIER PERFORMANCE

1. Carrier Performance Files. Each origin TO must establish a carrier performance file for each mobile home carrier qualified to serve the installation's AOR. The file must contain all pertinent data relating to the carrier's performance.

2. Unsatisfactory Performance. When a carrier or carrier's agent violates any provision of the TOS, rules and regulations of rate tariffs/tenders, legal requirements, or commits unethical acts, the TO must take action. As a minimum, the TO must report any violations and/or unsatisfactory service to HQ MTMC/MTPP-HR.

MOTO MESSAGE REQUEST FORMAT

FROM: (TO)

TO: CDRMTMC ALEXANDRIA VA//MTPP-HR//

SUBJECT: REQUEST FOR ONE-TIME-ONLY -- MOBILE HOME RATE

UNCLAS

1. MEMBER'S/EMPLOYEE'S NAME/RANK/SSN/MILITARY SERVICE.

2. PICK UP POINT INCLUDES COMPLETE ADDRESS, COUNTY/PARISH, CITY, STATE, AND ZIP CODE.

3. DESTINATION POINT INCLUDES COMPLETE ADDRESS, COUNTY/PARISH, CITY, STATE, AND ZIP CODE.

4. PICKUP DATE.

5. REQUIRED DELIVERY DATE.

6. INDICATE SERVICES TO BE PERFORMED BY CARRIER (USE SOLICITATION ITEM NUMBERS FROM CHAPTER 4 OF THIS SOLICITATION TO INCLUDE ANY ACCESSORIAL SERVICES AND ANY SPECIAL SERVICES REQUIRED FOR THE MOVEMENT OF THE MOBILE HOME (I.E. WRECKER SERVICE, CRANE, ETC.).

7. IF NO DESTINATION ADDRESS IS PROVIDED PPSO MUST GIVE ESTIMATED DAYS IN SIT. SIT LOCATION IF REQUIRED.

8. MOBILE HOME STATISTICS: LENGTH, WIDTH, HEIGHT, YEAR, MAKE, MODEL, AND MANUFACTURER'S WEIGHT. IF DOUBLEWIDE OR HAS AN EXPANDO, DIMENSIONS OF EXPANDO AND MANUFACTURER'S DESIGN ZONES. PITCHED OR HINGED ROOF.

9. THE NUMBER OF AXLES WITH TIRES AND THE NUMBER OF BRAKING AXLES ON THE MOBILE HOME -- IF DOUBLEWIDE, NUMBER AXLES WITH TIRES ON EACH HALF.

10. PICKUP CONDITIONS AT THE ORIGIN SITE.

11. ORIGIN BLOC.

12. DESTINATION BLOC.

13. TRANSPORTATION OFFICE POC (INCLUDE NAME, DSN, AND COMMERCIAL PHONE NUMBERS).

14. ADDITIONAL REMARKS.

Figure 407-1. MOTO Message Request Format

ACCESSORIAL SERVICES - MOBILE HOMES
(Prescribed by DoD 4500.34R)

SECTION I - IDENTIFICATION OF SHIPMENT

1. ORDERING ACTIVITY/INSTALLATION	2a. OWNER NAME *(Last, First, Middle Initial)*	b. RANK OR GRADE

3. MOBILE HOME DESCRIPTION			
a. MAKE	b. SERIAL NUMBER	c. SIZE	d. YEAR

4. BILL OF LADING NUMBER	5. DATE OF SHIPMENT *(YYYYMMDD)*
6. ORIGIN OF SHIPMENT	7. DESTINATION OF SHIPMENT

SECTION II - CERTIFICATE OF CARRIER

8. CARRIER FURNISHED MATERIALS/PERFORMED SERVICES AS INDICATED HEREON *(X as applicable)*

	AT ORIGIN		AT DESTINATION		OTHER

9. REMARKS

10a. CARRIER NAME	b. SCAC

11. CARRIER REPRESENTATIVE		
a. SIGNATURE	b. TITLE	c. DATE SIGNED *(YYYYMMDD)*

SECTION III - STORAGE-IN-TRANSIT (SIT)
(Carrier will enter complete information or "NONE")

12. STORED AT *(City and State)*	13. SIT CONTROL NUMBER

14. DATE IN *(YYYYMMDD)*	15. DATE OUT *(YYYYMMDD)*	16. NUMBER OF DAYS

13a. TRANSPORTATION OFFICER SIGNATURE	b. DATE SIGNED *(YYYYMMDD)*

DD FORM 1863, SEP 1998 (EG) PREVIOUS EDITION IS OBSOLETE.

Figure 407-2. DD Form 1863, Accessorial Services – Mobile Homes

SECTION IV - ACCESSORIAL SERVICES PROVIDED
(Carrier will enter complete information or "N/A")

14. ORIGIN SERVICES

DESCRIPTION (1)		UNIT PRICE (2)	CHARGE OR NO CHARGE (N/C) (3)
a. UNBLOCK			
b. PACK			
c. UNANCHOR			
d. UNSKIRT			
e. EXPANDO - REMOVE			
f. DOUBLE-WIDE - SEPARATE			
g. UTILITIES - DISCONNECT			
h. LABOR CHARGE			
i. WAITING TIME			
j. PREPARATION FOR MOVEMENT			
k. APPLIANCE SERVICING			
l. OTHER:			

15a. CARRIER SIGNATURE	b. DATE SIGNED *(YYYYMMDD)*
DO NOT SIGN UNTIL CARRIER HAS COMPLETED ALL COLUMNS IN ITEM 14 ABOVE.	
16a. MEMBER SIGNATURE	b. DATE SIGNED *(YYYYMMDD)*

17. DESTINATION SERVICES

DESCRIPTION (1)		UNIT PRICE (2)	CHARGE OR NO CHARGE (N/C) (3)
a. BLOCK			
b. UNPACK			
c. ANCHOR			
d. SKIRT			
e. EXPANDO - INSTALL			
f. DOUBLE-WIDE - REASSEMBLE			
g. UTILITIES - RECONNECT			
h. LABOR CHARGE			
i. WAITING TIME			
j. OTHER:			

18a. CARRIER SIGNATURE	b. DATE SIGNED *(YYYYMMDD)*
DO NOT SIGN UNTIL CARRIER HAS COMPLETED ALL COLUMNS IN ITEM 17 ABOVE.	
19a. MEMBER SIGNATURE	b. DATE SIGNED *(YYYYMMDD)*

DD FORM 1863 (BACK), SEP 1998

Figure 407-2. DD Form 1863 (Back), Accessorial Services – Mobile Home (Cont'd)

MOBILE HOME VOLUME MOVE MESSAGE REQUEST FORMAT

The following message format must be utilized to request volume move rates for mobile homes:

FROM: TO

TO: CDR MTMC ALEXANDRIA VA //MTPP-HR//

SUBJECT: MOBILE HOME VOLUME MOVEMENT REQUEST

UNCLAS

1. ORIGIN (CITY/STATE).

2. DESTINATION (CITY/STATE).

3. ORIGIN TO (INCLUDING BLOC).

4. DESTINATION TO (INCLUDING BLOC).

5. NUMBER OF SHIPMENTS (GROUPED TOGETHER BY SIZE WITH THE FOLLOWING INFORMATION INCLUDED FOR EACH MOBILE HOME).

6. SIZE OF TRAILER (WIDTH, LENGTH, HEIGHT, MAKE, MODEL, IF DOUBLE WIDE, DIMENSIONS OF EXPANDO, MANUFACTURER'S WEIGHT, AND YEAR).

7. THE NUMBER OF AXLES WITH TIRES AND THE NUMBER OF BRAKING AXLES ON THE MOBILE HOME, IF DOUBLE-WIDE, NUMBER AXLES WITH TIRES ON EACH HALF.

8. SERVICES TO BE PERFORMED BY CARRIER. (USE MOBILE HOME SOLICITATION ITEM NUMBERS, TO INCLUDE ANY ACCESSORIAL SERVICES AND ANY SPECIAL SERVICES REQUIRED FOR THE MOVEMENT OF THE MOBILE HOME, I.E., WRECKER SERVICE, CRANE ETC.)

9. EFFECTIVE PERIOD OF TIME FOR MOVEMENT OF SHIPMENTS.

10. ESTIMATED NUMBER OF SHIPMENTS TO BE TENDERED DAILY OR ACCORDING TO OTHER KNOWN SCHEDULE.

11. INELIGIBLE MOBILE HOME CARRIERS, IF APPLICABLE.

12. SIT REQUIREMENTS, IF ANY.

13. TO POC (INCLUDE NAME AND PHONE NUMBER (DSN AND COMMERCIAL TELEPHONE NUMBER).

Figure 407-3. Mobile Home Volume Move Message Request Format

MOBILE HOME COUNSELING CHECKLIST

1. Advise the member/employee of projected excess costs. After receiving the MOTO rate, advise the member/employee of updated excess cost.

2. Most states have special regulations with respect to the speed/route of travel, time of day and week a mobile home may be moved, weather conditions, lighting, escorts, etc., that may affect the transit time/cost.

3. Alaska requires a document indicating the mobile home complies with the State of Alaska specifications.

4. Advise members of design requirements in the US to include dimensions allowed, structural roof design, heating and cooling design, and structural wind zone design.

Figure 407-4. Mobile Home Counseling Checklist

INVENTORY OF ARTICLES SHIPPED IN HOUSE TRAILER | PAGE OF PAGES

CARRIER | CARRIER'S REFERENCE NO. | GBL NO | OWNER'S GRADE OR RATING AND NAME

ORIGIN LOADING ADDRESS *(City and State)* | DESTINATION *(City and State)*

SYMBOLS

EXCEPTION *(The omission of these symbols indicates good condition except for normal wear.)*

BE - BENT
BR - BROKEN
BU - BURNED
CH - CHIPPED
CU - CONTENTS AND CONDITIONS UNKNOWN
D - DENTED
F - FADED
G - GOUGED
L - LOOSE
M - MARRED
MI - MILDEW
MP - MOTHEATEN
CP - PACKED BY CARRIER
PBO - PACKED BY OWNER
R - RUBBED
RU - RUSTED
SC - SCRATCHED
SH - SHORT
SO - SOILED
T - TORN
W - BADLY WORN
Z - CRACKED

LOCATION

1. ARM
2. BOTTOM
3. CORNER
4. FRONT
5. LEFT
6. LEG
7. REAR
8. RIGHT
9. SIDE
10. TOP
11. VENEER
12. EDGE

ITEM NO	ARTICLES	CONDITION AT ORIGIN	EXCEPTIONS AT DEST (If any)	ITEM NO	ARTICLES	CONDITION AT ORIGIN	EXCEPTIONS AT DEST (If any)
1				1			
2				2			
3				3			
4				4			
5				5			
6				6			
7				7			
8				8			
9				9			
0				0			
1				1			
2				2			
3				3			
4				4			
5				5			
6				6			
7				7			
8				8			
9				9			
0				0			

REMARKS/EXCEPTIONS *(Include item numbers.)*

"We have checked all the items listed and numbered 1 to _____ inclusive and acknowledge that this is a true and complete list of the goods tendered and of the state of the goods received."

ORIGIN		DESTINATION	
SIGNATURE *(Carrier (Driver))*	DATE	SIGNATURE *(Carrier (Driver))*	DATE
SIGNATURE *(Owner or authorized agent)*	DATE	SIGNATURE *(Owner or authorized agent)*	DATE

DD Form 1412, JUL 74 PREVIOUS EDITION WILL BE USED

Figure 407-5. DD Form 1412, Inventory of Articles Shipped in House Trailer

MOBILE HOME INSPECTION RECORD	1. DATE *(YYYYMMDD)*

PRIVACY ACT STATEMENT

AUTHORITY: 37 USC 406; 5 USC 5726; and E.O. 9397.
PRINCIPAL PURPOSE(S): To document inspection of Mobile Homes and account for any violations of the carrier's tender of service; and to act as supporting documentation for any action arising from a carrier's unsatisfactory performance.
ROUTINE USE(S): Information contained in this system of records may be provided to a carrier in the course of adjudication or other action taken for unsatisfactory performance reasons.
DISCLOSURE: Voluntary; however, failure to provide the requested information may delay settlement of a claim.

PART I - SHIPMENT IDENTIFICATION

2a. NAME OF CARRIER	b. SCAC	c. CARRIER FREIGHT BILL NUMBER *(To be completed by carrier at origin.)*	d. GOVERNMENT BILL OF LADING NUMBER
3a. NAME OF MEMBER	b. SOCIAL SECURITY NUMBER		c. RANK/PAY GRADE
4a. ORIGIN SHIPPING OFFICE	b. GBLOC NO.	5a. DESTINATION SHIPPING OFFICE	b. GBLOC NO.
c. ORIGIN ADDRESS *(Include city, state and zip code.)*		c. DESTINATION ADDRESS *(Include city, state and zip code.)*	

PART II - SPECIFICATIONS

6a. MOBILE HOME *(Make)*			7. TIRES *(To be completed by the carrier at origin)*			
			(1) SIZE	(2) PLY RATING	(3) MFR SERIAL NO.	(4) *CONDITION
			a. LEFT 1			
b. MODEL	8. DIMENSIONS *(Actual)*		b. LEFT 2			
	(1) FEET & INCHES	(2) EXPANDO	c. LEFT 3			
	a. HEIGHT		d. LEFT 4			
			e. RIGHT 1			
c. SERIAL NUMBER	b. LENGTH		f. RIGHT 2			
			g. RIGHT 3			
	c. WIDTH		h. RIGHT 4			
			*CONDITION: G - GOOD; F - FAIR; P - POOR			

PART III - INSPECTION

9. ORIGIN INSPECTION COLUMN - complete ONLY when a visual inspection of the Mobile Home is made at origin by the Carrier or the ITO. DESTINATION INSPECTION COLUMN - complete ONLY when a visual inspection of the Mobile Home is made at destination by the Carrier or the ITO.	(1) ORIGIN				(2) DESTINATION			
	(a) CARRIER		(b) ITO		(a) CARRIER		(b) ITO	
	YES	NO	YES	NO	YES	NO	YES	NO
a. Was the Mobile Home unblocked?								
b. Do springs have adequate/normal arch?								
c. Is there a minimum 3-inch clearance over each tire?								
d. Does Mobile Home appear to be overloaded?								
e. Do structural members, including A-Frame, appear sound - no damage?								
f. Are all visible frame to body attachments/bolt connections in place and unbroken?								
g. Does exterior paneling/molding appear to be tight and secure?								
h. Are brake and clearance lights and turn signals operable at time of hook up?								
i. Does member acknowledge that wheel bearings have been packed within the last 90 days?								
j. Is Mobile Home equipped with operable brakes at time of hook up?								
k. Are wheel lugs tight?								
l. Does member acknowledge that plumbing has been drained and protected from freezing?								
m. Does member acknowledge that all appliances/utilities have been serviced?								
n. Have attached items been detached and stowed inside *(TV antenna, air conditioner, etc.)*?								
o. Are all fixtures which cannot be removed anchored securely?								
p. Have all utilities been disconnected and secured?								
q. Does member acknowledge that all prohibited items have been removed?								
r. Does member acknowledge that all loose items/accessories in closets/cabinets have been properly packed and secured?								
s. Have loose furniture and heavy moveable items been secured above and forward of axles?								
t. Are drawers, cabinets, and sliding doors secured or taped?								
u. Are mirrors, windows and other glass cross (X) taped?								
v. Is Mobile Home equipped with valid license or permit?								
w. Are interior contents properly inventoried and inventory provided to carrier?								
x. Does the Mobile Home meet the transportation safety standards of destination and intermediate states?								
y. Do exterior doors lock? Have keys been given to carrier?								

DD FORM 1800, SEP 1998 (EG) PREVIOUS EDITION IS OBSOLETE. WHS/DIOR, Oct 98

Figure 407-6. DD Form 1800, Mobile Home Inspection Record

9. GENERAL CONDITION. Record degree and precise location of any apparent damage at origin or destination to the Mobile Home equipment (fixed or installed), including interior and exterior surface such as dented panels, loose or missing trim, broken windows, scratched or marred surfaces, etc. *USE DIAGRAM TO ILLUSTRATE DAMAGES.* Use the illustrated codes to indicate origin/destination damage and who performed inspection. If no damage exists, indicate NONE.

NOTE: *MARK "X" = ITO/REPRESENTATIVE*
"O" = CARRIER

ORIGIN

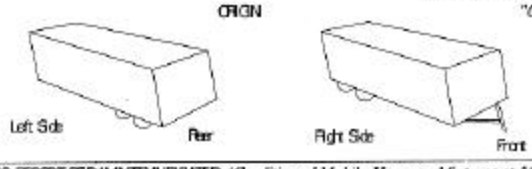

DESTINATION

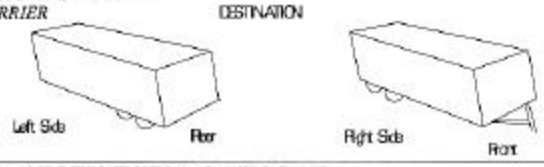

10. REPORT OF DAMAGES INDICATED. *(Condition of Mobile Home and fixtures at "ORIGIN" and "DESTINATION" is as described above.)*

ORIGIN ITO INSPECTION *(If applicable, "Type" or "Print")*			DESTINATION ITO INSPECTOR *(If applicable, "Type" or "Print")*	
ORIGIN ITO REPRESENTATIVE *(Signature)*	DATE		DESTINATION ITO REPRESENTATIVE *(Signature)*	DATE
ORIGIN CARRIER REPRESENTATIVE *(Signature)*	DATE		DESTINATION CARRIER REPRESENTATIVE *(Signature)*	DATE
ORIGIN MEMBER/AGENT *(Signature)*	DATE	DESTINATION MEMBER/AGENT *(Signature)*	TIME *(Of delivery)*	DATE

DD Form 1800 Reverse, FEB 83

Figure 407-6. DD Form 1800, Mobile Home Inspection Record (Cont'd)

MEMBER'S REPORT ON CARRIER PERFORMANCE - MOBILE HOME

SECTION I - TO BE COMPLETED BY DESTINATION ITO

1. DATE *(YYYYMMDD)*	2. REQUIRED DELIVERY DATE *(YYYYMMDD)*	3. GOVERNMENT BILL OF LADING NUMBER
4a. NAME OF MEMBER *(Last, First, Middle Initial)*	b. GRADE	5. NAME OF CARRIER
6. ORIGIN INSTALLATION		7. PICKUP ADDRESS *(Street, Apartment No., City, State, ZIP Code)*
8. DESTINATION INSTALLATION		*(X if:)* ☐ TRAILER COURT ☐ STORAGE FACILITY

SECTION III - TO BE COMPLETED BY MEMBER

Complete every item applicable by placing an "X" in the column under "YES" or "NO". All items marked "NO" will be considered as carrier deficiencies and the performance of the carrier will be evaluated for this shipment based on items listed below. A "NO" answer must be explained or your response CANNOT BE USED TO RATE THE CARRIER.

	YES	NO
9. Did the carrier pick up the mobile home on the agreed date?		
10. Did the carrier provide all the required services?		
11. Was the mobile home offered for delivery on or before the required delivery date?		
12. Was the mobile home and its contents delivered without loss or damage? If "NO", what is the estimated value of the loss and/or damage? $ _____		
13. Was the carrier cooperative in checking the condition of your mobile home upon delivery?		
14. Did the carrier provide you a completed mobile home inspection record at origin?		
15. Did you consider the carrier personnel:		
a. Courteous		
b. Cooperative		
c. Neat in appearance		
16. Were you satisfied with the carrier's services on this movement of your mobile home at:		
a. Origin		
b. Destination		
17. Were the Transportation Office personnel courteous and helpful to you?		

18. COMMENTS *(Briefly explain all "NO" answers.)*

19. SIGNATURE OF MEMBER	20. DATE *(YYYYMMDD)*

SECTION III - TO BE COMPLETED BY DESTINATION ITO

21. *(X if applicable)* ☐ NO RESPONSE RECEIVED FROM MEMBER	22. NAME OF DESTINATION ITO *(Last, First, Middle Initial)* *(Type or print)*
23. SIGNATURE	24. DATE *(YYYYMMDD)*

DD FORM 1799, SEP 1998 (EG) PREVIOUS EDITION IS OBSOLETE.

Figure 407-7. DD Form 1799, Member's Report on Carrier Performance – Mobile Home

THIS PAGE INTENTIONALLY LEFT BLANK

CHAPTER 408

TRANSPORTATION OF POVS

A. GENERAL

1. This Chapter prescribes procedures and provides guidance for the shipment, by surface means only, of member's/employee's POVs.

2. This Chapter applies to all POV shipments for members/employees entitled to have a POV shipped at Government expense IAW the JFTR/JTR and DOD Component publications.

3. These provisions apply to the shipment of POVs within CONUS; to, from, and between CONUS and overseas; and intertheater areas.

4. Information regarding restrictions can be found in the DOD Component publications and general instruction sections of the PPCIG, Volume II (www.mtmc.army.mil then select Personal Property, Domestic or International, and Consignment Instruction Guide (PPCIG-OL)).

5. Purpose of the DD Form 788, Private Vehicle Shipping Document for Automobile (Figure 408-1), DD Form 788-1, Private Vehicle Shipping Document for Van (Figure 408-2), DD Form 788-2, Private Vehicle Shipping Document for Van (Figure 408-3), or commercial equivalent is:

a. Inspecting and reporting the condition of the POV and detecting damage and pilferage during shipment. The form must give a complete description of the POVs condition during all phases of shipment when it is in the custody of the Government.

b. Determining the validity of claims for loss or damage and for determining third-party responsibility. Since the vehicle is reinspected at each phase of the shipment, responsibility for loss or damage can be determined accurately.

B. RESPONSIBILITIES

1. TO Responsibilities. Counsel the member/employee using DD Form 1797 (Figure 401-6). Consult the MTMC pamphlet "Shipping Your POV" at www.mtmc.army.mil then click on Personal Property, Vehicles (POV), and Shipping Your POV.

2. The port/VPC must initiate the DD Form 788 (Figure 408-1 through 408-3) or commercial equivalent and perform a joint pre-move inspection with the member/employee. The individual making the inspection must mark the code on the vehicle illustrations at the approximate location(s) of exterior damage. The POV condition codes must be used to illustrate the type of damage to the exterior of the POV in Item 8 and the interior in Items 9 and 10. The DD Form 788 must be annotated at each transfer point to ensure claims liability is established.

C. DOD EXPORT/IMPORT CONTROL PROGRAM

1. POVs imported to the United States are subject to safety standards under the Motor Vehicle Safety Act of 1966, revised under the Imported Vehicle Safety Compliance Act of 1988, recodified at 49 U.S.C. Chapter 301, Motor Vehicle Safety; bumper standards under the Motor Vehicle Information and Cost Act of 1972, recodified at 49 U.S.C. Chapter 305, National Motor Vehicle Title Information System; and air pollution control standards promulgated by the Environmental Protection Agency (EPA) under the Clean Air Act of 1968, as amended in 1977 and 1990. These laws and regulations apply to importing POVs to any state of the United States, the DC, Puerto Rico, the Northern Mariana Islands, Guam, American Samoa, and the Virgin Islands.

2. Refer to the following web sites for additional information:

a. http://www.nhtsa.gov/cars/rules/import.

b. http://www.customs.ustreas.gov/top/sitemap.htm then click on Know Before You Go, Know Before You Go Brochure, Importing a Car, Automobiles, and Informal Entries (under US $2,000) Importing Goods for Personal Use.

c. http://www.mtmc.army.mil then click on Personal Property, Vehicles (POV), and Shipping Your POV.

3. Information concerning vehicle emissions and a listing of Independent Commercial Importers companies may be obtained from the EPA, Commercial (202) 564 9660. Information concerning compliance with motor vehicle safety standards and a listing of Registered Importer (RI) companies may be obtained from the aforementioned web sites and from the DOT safety hotline, (800) 424 9393 (in US), or (202) 366 0123.

a. US Specification POV. The original manufacturer's certification label affixed to the vehicle doorpost or frame of motorized bike or motor scooter, is the best evidence of conformance. The label must show the date of manufacture and the vehicle identification number. For multipurpose passenger vehicles, the type of vehicle must also be shown.

b. Non-US Specification POV.

(1) Effective 31 January 1990, Public Law (PL) 100-562, the Imported Vehicle Safety Compliance Act of 1988, and its implementing regulations require that POVs which are not certified by their original manufacturer to be in conformity with US Federal Motor Vehicle safety, bumper, tires, and theft prevention standards, be imported into the CTUS only through RIs registered with the DOT National Highway Traffic Safety Administration (NHTSA). Non-US specification vehicles must be brought into conformity with all Federal motor safety standards prescribed by PL 100-562 within a reasonable time after importation. Members/employees should contact the NHTSA for a current listing of RIs for their POV.

(2) In addition to customs requirements, importers of such vehicles must furnish a DOT conformance bond, in the amount of three times the value of the vehicle, on DOT Bond Form HS 474 (Figure 408-4).

4. In addition to federal emission control standards, California (CA) has its own program for regulating importation of nonconforming vehicles. Personnel on assignment to CA must comply with that state's emission-control requirements in addition to federal requirements. For more information on CA's requirements, contact:

California Air Resources Board
1001 "I" Street
P.O. Box 2815
Sacramento, CA 95812-5000
Telephone: (800) 242 4450 (outside CA) or (800) 363 7664 (inside CA)
Electronic Mail: helpline@arb.ca.gov

5. For additional information on distinguishing a US specification POV from a non-US specification POV, see this Regulation, Part V, Chapter 502, Paragraph J.

D. TURN-IN OF POVS

1. The contractor is responsible for shipping and receiving POVs between ports/VPCs. CONUS/OCONUS VPCs are listed in Appendix F.

2. Assignment of RDD to POVs. RDDs must be assigned by the port/VPC at the time of vehicle turn-in. Factors entering into the RDD calculation are the number of days required for processing, port/VPC hold time, vessel availability, ocean transit time, processing time at the port/VPC of discharge, and number of days for the inland/transshipment movement to final destination.

3. Approval for a POV shipment from a primary port/VPC is not required before POV turn-in at the port/VPC.

4. Approval for Shipment To/From an Alternate Port/VPC. Prior approval of a member's/employee's request for a POV to be shipped to/from an alternate port/VPC is required from the TO (when advised by the member/employee during the counseling session) prior to turn-in at the alternate port/VPC. The alternate port/VPC must be in the same country as the designated port/VPC. The member/employee reimburses the Government for any excess cost involved (See Figure 408-5). An alternate port/VPC in a different country is authorized or approved by the Secretarial Process, JFTR, par. U5435-B, Alternate Ports or JTF par. C11004-B.2.d, Alternate Ports. See DOD component publications for delegation of approval authority.

5. The procedures for requesting a shipment through an alternate port/VPC are as follows:

a. The member/employee must request alternate port/VPC shipment approval from the TO providing the counseling service (See Figure 408-5).

b. The origin TO must counsel the member/employee concerning the excess costs resulting from shipment to and from other than the authorized ports/VPC. Collection arrangements must be made IAW the DOD Component publications.

c. Uniformed members no longer in a pay status and civilian employees effecting shipments through alternate ports/VPC must pay the excess costs prior to the move.

d. In determining excess costs, the port/VPC must consult with the collection instructions from HQ MTMC, MTPP-HP. These instructions are available at each port/VPC.

6. If a member/employee delivers a POV to an alternate port/VPC within the same country, without prior approval, the port/VPC must develop a cost comparison, advise the member/employee of any excess costs incurred, and issue a DD Form 139, Pay Adjustment Authorization (Figure 408-6), for checkage against the member's/employee's pay, if in a pay status.

7. If a member/employee delivers a POV to an alternate port/VPC in a different country without prior approval, the port/VPC will not process the vehicle for movement. The port/VPC will assist the member/employee in contacting the Coast Guard or DOD component to obtain approval (See DOD Component publications). The port/VPC will advise the member/employee of any excess costs incurred and issue a DD Form 139, if required.

8. For members/employees in a non-pay status whose POV movement will incur excess cost, collection must be accomplished in advance of the movement using DD Form 1131, Cash Collection Voucher (Figure 408-7). If the excess cost has been determined and collected before the vehicle is delivered to the port/VPC, the member/employee must provide evidence to the port/VPC of advance payment. If advance payment has not been accomplished, the port/VPC must calculate the excess cost and take collection action.

9. For Air Force members/employees whose POV shipment incurs excess costs, a copy of the documentation must be forwarded to JPSSO-SAT, ECAF, 613 Northwest Loop 410, Suite 400, San Antonio, TX, 78216-5518. For Marine Corps members/employees the documentation must be forwarded to the Comptroller, Transportation Voucher Certification Branch, ATTN: (Code 470), 814 Radford Blvd., Suite 20318, Albany, GA, 31704-0318.

E. MEMBER'S/EMPLOYEE'S RESPONSIBILITY

1. The member/employee must ensure the POV is in safe operating condition and meets all host-country restrictions and requirements when turned in at the port/VPC for shipment. POVs that do not meet host-country standards may be impounded by local authorities and not permitted to leave the port/VPC.

2. To have a long-term leased vehicle (12 months or longer) or a vehicle with a recorded lien in the US shipped outside the CONUS to the permanent duty station, designated place, or other authorized destination, the member/employee must provide written approval from the "third-party-interest" (leasing company or lienholder) which expressly provides that the vehicle may be exported. This written approval must be on the leasing company's or lienholder's letterhead paper, and contain a complete description of the vehicle, including the Vehicle Identification Number, the name of the owner or lienholder of the leased vehicle, and the telephone numbers at which that owner or lienholder may be contacted. The writing must bear an original signature of an official of the leasing company or lienholder, and state the date it was signed. The written approval must include the leasing company's or lienholder's

acknowledgement that return shipment prior to the next permanent change of station is a private matter between the leasing company or lienholder and the member/employee. All requirements stated in the lease agreement are the responsibility of the member/employee.

3. The member/employee must ensure that only authorized personal articles remain in the POV when turned-in for processing. The following items are not allowed to be shipped in the POV:

a. Household items and camping equipment.

b. Tools (in excess of $200 value).

c. Radios, citizen-band radios, tape decks, tapes, and cassettes not installed as permanent equipment.

d. The shipment of flammable or hazardous material, including flares, oils, waxes, and polishes, is prohibited, except for small quantities of touch-up paint (between .5 and 3 oz), when properly sealed to prevent leakage and must not pose a hazard during movement.

e. TVs and VCRs; except factory installed.

f. Accessories not permanently installed.

g. Any pressurized cans.

h. Any liquids; for example, antifreeze or air fresheners that may be spilled and leave a stain.

4. Items of personal property specified below may be left in the vehicle:

a. Items considered to be normal vehicular tools such as; jacks, tire irons, lug wrenches, tire chains, fire extinguishers, mechanical tire inflator, first aid kits, jumper cables, warning triangle/trouble lights, and basic hand tools, i.e., screwdrivers, pliers, wrenches, and hammers.

b. One spare tire and two tires with wheels (either mounted or unmounted).

c. Portable cribs, strollers or child’s car seats.

d. Luggage racks, small items such as thermos bottles, bottle warmers, car cushions, blankets, and similar items for the comfort or convenience of the member/employee during long motor trips. Such items may be shipped with the vehicle only if they can be loaded into and secured in the carton (26 inches x 10 inches x 14 inches) normally provided for vehicular tools and accessories.

e. Catalytic converters, catalyst components (pellets), oxygen sensors, or pipe segments used to replace converters in overseas areas.

5. The member/employee must turn-in one complete set of keys (including a gas-cap key) with the vehicle at the time of delivery to the vehicle processing point. The member/employee

should be counseled to retain a second complete set of keys and to have them available at the time of pickup at destination. When the vehicle's design permits, the vehicle, the trunk, and the glove compartment must be locked by the member/employee.

6. Because a vehicle may be subjected to freezing temperatures during transit, the member/employee must safeguard the vehicle's cooling system with a nonalcoholic, permanent-type antifreeze solution testing to minus 20 degrees Fahrenheit or lower, if the military shipping agency determines it to be necessary. If the member/employee decides not to fulfill this requirement, a signed release must be secured by POV processing personnel.

7. The member/employee must ensure that the POV contains no more than one-fourth tank of fuel when it is delivered to the port/VPC. The fuel system may be drained before shipment and only a minimum replacement will be made at destination.

8. The member/employee must ensure that all exterior surfaces and undercarriages of POVs are clean and free of soil and other foreign matter before turn-in. The member/employee must provide the destination terminal an address where notification can be made of arrival and availability for pick up of the POV.

9. A letter of authorization, power of attorney, or other acceptable evidence of agency is required to deliver a vehicle by someone other than the member's/employee's spouse (when the spouse is on the orders). If the vehicle is to be picked up by anyone other than the member/employee, including the spouse, that individual must have a power of attorney or be identified as a designated agent on the DD Form 788, Block 38, or commercial equivalent and this designation/identification must be made at the time the form is prepared.

10. If the POV is not picked up by the member/employee within 20 calendar days after the first notification, the contractor must mail a second notice (certified-return receipt requested or equivalent) on the 21st day to prevail upon member/employee to pick up the POV within 30 calendar days of the date the POV was received at the contractor's facility. If the POV is not picked up within 45 days, the contractor must notify the member/employee via certified letter (return receipt requested or equivalent) that the member/employee has the option of relinquishing ownership of the POV to the Government so property disposal action can be taken. If the member does not elect to relinquish ownership or respond, the contractor shall act IAW the contract and seek guidance from the COR.

11. The member/employee must ensure the installed auto alarm or anti-theft device(s) is turned off or otherwise disabled prior to being turned in.

F. CHANGE OF HOME PORT/VPC

The TO must submit a request to HQ MTMC, theater CINC, or designated representative by electronic means, as soon as possible or at least 10 days prior to pickup date of the first vehicle (See Figure 408-8).

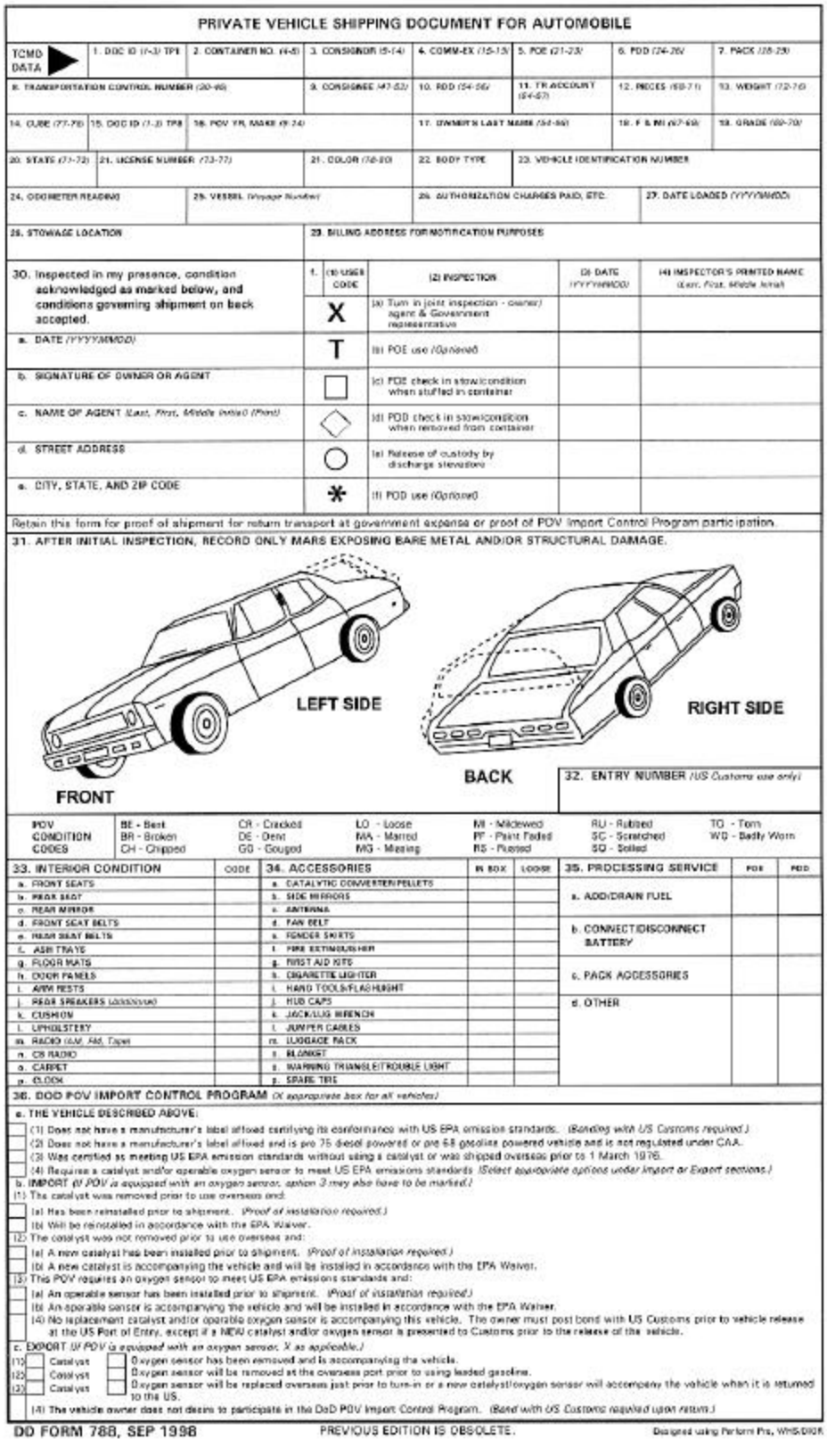

PRIVATE VEHICLE SHIPPING DOCUMENT FOR AUTOMOBILE

TCMD DATA | 1. DOC ID (1-3) TPI | 2. CONTAINER NO. (4-8) | 3. CONSIGNOR (9-14) | 4. COMM-EX (15-18) | 5. POE (21-23) | 6. POD (24-26) | 7. PACK (28-29)

8. TRANSPORTATION CONTROL NUMBER (30-46) | 9. CONSIGNEE (47-52) | 10. POD (54-56) | 11. TR ACCOUNT (54-57) | 12. PIECES (58-71) | 13. WEIGHT (72-76)

14. CUBE (77-79) | 15. DOC ID (1-3) TPI | 16. POV YR, MAKE (9-24) | 17. OWNER'S LAST NAME (54-66) | 18. F & MI (67-69) | 19. GRADE (69-70)

20. STATE (71-72) | 21. LICENSE NUMBER (73-77) | 21. COLOR (78-80) | 22. BODY TYPE | 23. VEHICLE IDENTIFICATION NUMBER

24. ODOMETER READING | 25. VESSEL (Voyage Number) | 26. AUTHORIZATION CHARGES PAID, ETC. | 27. DATE LOADED (YYYYMMDD)

28. STOWAGE LOCATION | 29. BILLING ADDRESS FOR NOTIFICATION PURPOSES

30. Inspected in my presence, condition acknowledged as marked below, and conditions governing shipment on back accepted.

a. DATE (YYYYMMDD)

b. SIGNATURE OF OWNER OR AGENT

c. NAME OF AGENT (Last, First, Middle Initial) (Print)

d. STREET ADDRESS

e. CITY, STATE, AND ZIP CODE

1. (3) USER CODE	(2) INSPECTION	(3) DATE (YYYYMMDD)	(4) INSPECTOR'S PRINTED NAME (Last, First, Middle Initial)
X	(a) Turn in joint inspection - owner/agent & Government representative		
T	(b) POE use (Optional)		
□	(c) POE check in stow condition when stuffed in container		
◇	(d) POD check in stow condition when removed from container		
○	(e) Release of custody by discharge stevedore		
*	(f) POD use (Optional)		

Retain this form for proof of shipment for return transport at government expense or proof of POV Import Control Program participation.

31. AFTER INITIAL INSPECTION, RECORD ONLY MARS EXPOSING BARE METAL AND/OR STRUCTURAL DAMAGE.

LEFT SIDE

RIGHT SIDE

FRONT

BACK

32. ENTRY NUMBER (US Customs use only)

POV CONDITION CODES						
	BE - Bent	CR - Cracked	LO - Loose	MI - Mildewed	RU - Rubbed	TO - Torn
	BR - Broken	DE - Dent	MA - Marred	PF - Paint Faded	SC - Scratched	WD - Badly Worn
	CH - Chipped	GG - Gouged	MG - Missing	RS - Rusted	SO - Soiled	

33. INTERIOR CONDITION	CODE	34. ACCESSORIES	IN BOX	LOOSE	35. PROCESSING SERVICE	POE	POD
a. FRONT SEATS		a. CATALYTIC CONVERTER/PELLETS			a. ADD/DRAIN FUEL		
b. REAR SEAT		b. SIDE MIRRORS					
c. REAR MIRROR		c. ANTENNA			b. CONNECT/DISCONNECT BATTERY		
d. FRONT SEAT BELTS		d. FAN BELT					
e. REAR SEAT BELTS		e. FENDER SKIRTS					
f. ASH TRAYS		f. FIRE EXTINGUISHER			c. PACK ACCESSORIES		
g. FLOOR MATS		g. FIRST AID KITS					
h. DOOR PANELS		h. CIGARETTE LIGHTER					
i. ARM RESTS		i. HAND TOOLS/FLASHLIGHT			d. OTHER		
j. REAR SPEAKERS (Locations)		j. HUB CAPS					
k. CUSHION		k. JACK/LUG WRENCH					
l. UPHOLSTERY		l. JUMPER CABLES					
m. RADIO (AM, FM, Tape)		m. LUGGAGE RACK					
n. CB RADIO		n. BLANKET					
o. CARPET		o. WARNING TRIANGLE/TROUBLE LIGHT					
p. CLOCK		p. SPARE TIRE					

36. DOD POV IMPORT CONTROL PROGRAM (X appropriate box for all vehicles)

a. THE VEHICLE DESCRIBED ABOVE:

☐ (1) Does not have a manufacturer's label affixed certifying its conformance with US EPA emission standards. (Bonding with US Customs required.)
☐ (2) Does not have a manufacturer's label affixed and is pre 75 diesel powered or pre 68 gasoline powered vehicle and is not regulated under CAA.
☐ (3) Was certified as meeting US EPA emission standards without using a catalyst or was shipped overseas prior to 1 March 1978.
☐ (4) Requires a catalyst and/or operable oxygen sensor to meet US EPA emissions standards. (Select appropriate options under Import or Export sections.)

b. IMPORT (If POV is equipped with an oxygen sensor, option 3 may also have to be marked.)

(1) The catalyst was removed prior to use overseas and:
☐ (a) Has been reinstalled prior to shipment. (Proof of installation required.)
☐ (b) Will be reinstalled in accordance with the EPA Waiver.

(2) The catalyst was not removed prior to use overseas and:
☐ (a) A new catalyst has been installed prior to shipment. (Proof of installation required.)
☐ (b) A new catalyst is accompanying the vehicle and will be installed in accordance with the EPA Waiver.

(3) This POV requires an oxygen sensor to meet US EPA emissions standards and:
☐ (a) An operable sensor has been installed prior to shipment. (Proof of installation required.)
☐ (b) An operable sensor is accompanying the vehicle and will be installed in accordance with the EPA Waiver.
☐ (4) No replacement catalyst and/or operable oxygen sensor is accompanying this vehicle. The owner must post bond with US Customs prior to vehicle release at the US Port of Entry, except if a NEW catalyst and/or oxygen sensor is presented to Customs prior to the release of the vehicle.

c. EXPORT (If POV is equipped with an oxygen sensor, X as applicable.)

(1) ☐ Catalyst ☐ Oxygen sensor has been removed and is accompanying the vehicle.
(2) ☐ Catalyst ☐ Oxygen sensor will be removed at the overseas port prior to using leaded gasoline.
(3) ☐ Catalyst ☐ Oxygen sensor will be replaced overseas just prior to turn-in or a new catalyst/oxygen sensor will accompany the vehicle when it is returned to the US.

☐ (4) The vehicle owner does not desire to participate in the DoD POV Import Control Program. (Bond with US Customs required upon return.)

DD FORM 788, SEP 1998 PREVIOUS EDITION IS OBSOLETE. Designed using Perform Pro, WHS/DIOR

Figure 408-1. DD Form 788, Private Vehicle Shipping Document for Automobile

CONDITIONS GOVERNING SHIPMENT

I UNDERSTAND AND ACCEPT THE TERMS UNDER WHICH THIS VEHICLE WILL BE TRANSPORTED OVERSEAS AS SET FORTH IN EXISTING REGULATION, i.e.:

1. That only one (1) privately-owned vehicle is being transported overseas under permanent change of station orders for the owner and/or his family as personal property, and that it is free of any legal encumbrance that would preclude its shipment and is not intended for resale. Owner must also retain a second (extra) set of keys.

2. That this vehicle contains no personal property in excess of that authorized in regulations of the Service concerned. I further understand that personal property shipped will only include those items that can fit in the container normally provided for vehicular tools and accessories.

(3) That no land transportation is authorized at Government expense except as specified in Section 12 of the Missing Persons Act, as amended, and 10 USC Section 2634(e).

(4) That failure of the owner to provide sufficient permanent type antifreeze to protect the cooling system to minus 20 degrees F (or lower if determined to be necessary by the shipping port) relieves the Government of any liability for damage due to freezing.

THIS CERTIFICATE constitutes authority for the placing in available storage chosen by the port, at the complete expense of the owner and at no cost whatsoever to the Government, the vehicle herein property of above named owner, (1) by the port of embarkation in the event that shipment of privately-owned vehicles therefrom is suspended or terminated because of a national emergency, and (2) by the port of debarkation in the event that the automobile is not picked up by the owner or his agent within forty-five (45) days after dispatch of the notification of its arrival.

I further understand that should the vehicle be placed in such storage, the Government, thenceforth, would not be responsible for its release or return to the owner or agent.

37. DELIVERY RECEIPT

a. EXCEPTIONS

(1) BY OWNER	(2) VERIFICATION OR DISAGREEMENT WITH REASONS

b. TERMINAL SERVICE - PICKUP (If as applicable. If unsatisfactory, specify.) ☐ SATISFACTORY ☐ UNSATISFACTORY

38. MISCELLANEOUS INFORMATION

39. I HEREBY ACKNOWLEDGE RECEIPT OF MY VEHICLE IN THE CONDITION IN WHICH I TURNED IT IN TO THE U.S. GOVERNMENT REPRESENTATIVE FOR TRANSSHIPMENT, EXCEPT AS NOTED ABOVE.

a. SIGNATURE OF OWNER OR AGENT	b. DATE (YYYYMMDD)

40. SIGNATURE OF VERIFYING U.S. GOVERNMENT REPRESENTATIVE	41. NAME OF PORT

DD FORM 788 (BACK), SEP 1998

Figure 408-1. DD Form 788, Private Vehicle Shipping Document for Automobile (Cont'd)

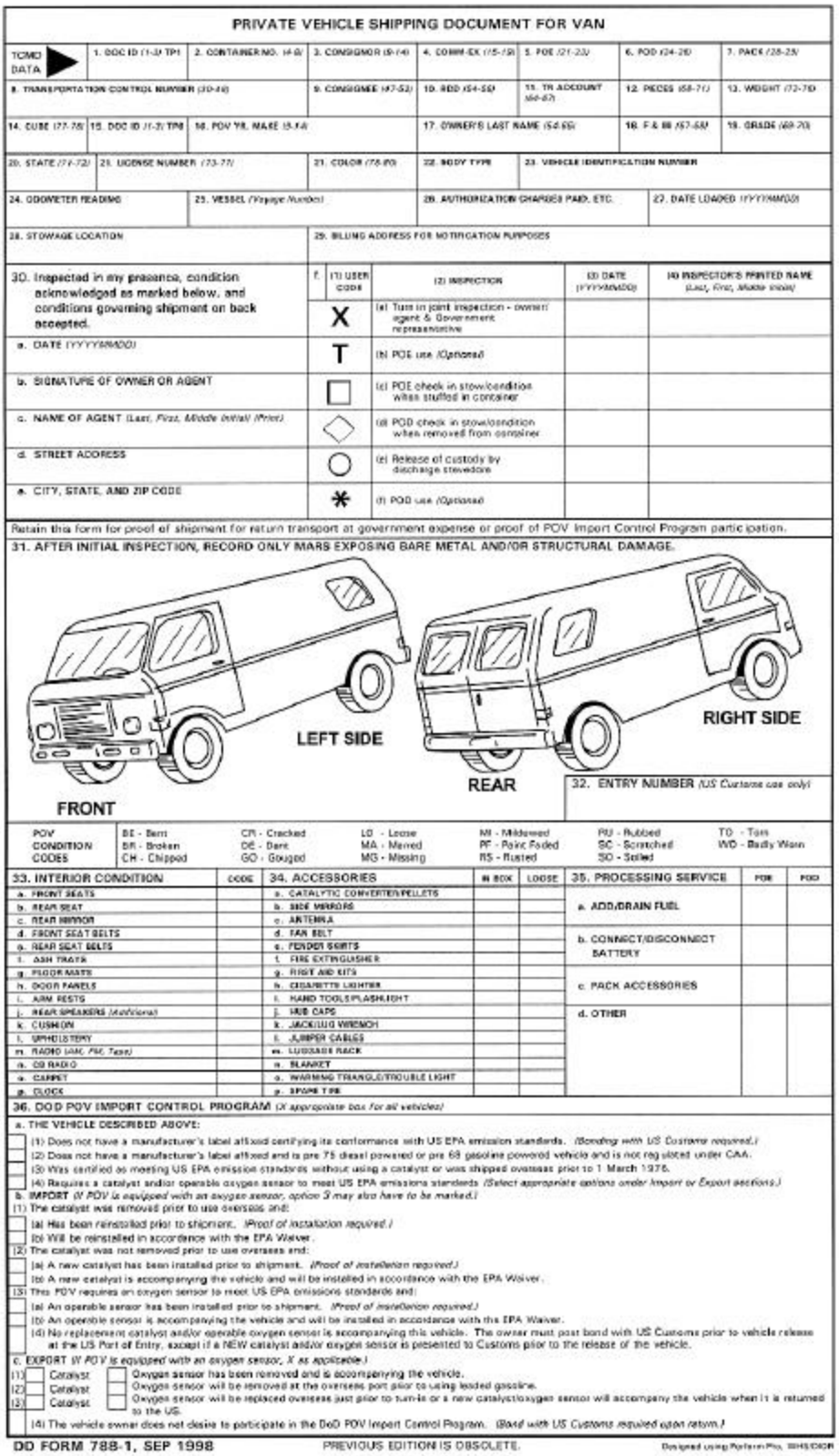

PRIVATE VEHICLE SHIPPING DOCUMENT FOR VAN

TCMD DATA	1. DOC ID (1-3) TP1	2. CONTAINER NO. (4-9)	3. CONSIGNOR (9-14)	4. COMM-EX (15-19)	5. POE (21-23)	6. POD (24-26)	7. PACK (28-29)
8. TRANSPORTATION CONTROL NUMBER (30-46)			9. CONSIGNEE (47-52)	10. RDD (54-59)	11. TR ACCOUNT (60-67)	12. PIECES (68-71)	13. WEIGHT (72-76)
14. CUBE (77-78)	15. DOC ID (1-3) TP8	16. POV YR, MAKE (5-14)		17. OWNER'S LAST NAME (54-69)		18. F & M (67-68)	19. GRADE (69-70)
20. STATE (71-72)	21. LICENSE NUMBER (73-77)		21. COLOR (78-80)	22. BODY TYPE	23. VEHICLE IDENTIFICATION NUMBER		
24. ODOMETER READING		25. VESSEL (Voyage Number)		26. AUTHORIZATION CHARGES PAID, ETC.		27. DATE LOADED (YYYYMMDD)	
28. STOWAGE LOCATION			29. BILLING ADDRESS FOR NOTIFICATION PURPOSES				

30. Inspected in my presence, condition acknowledged as marked below, and conditions governing shipment on back accepted.	f.	(1) USER CODE	(2) INSPECTION	(3) DATE (YYYYMMDD)	(4) INSPECTOR'S PRINTED NAME (Last, First, Middle Initial)
		X	(a) Turn in joint inspection - owner/agent & Government representative		
a. DATE (YYYYMMDD)		T	(b) POE use (Optional)		
b. SIGNATURE OF OWNER OR AGENT		□	(c) POE check in stow/condition when stuffed in container		
c. NAME OF AGENT (Last, First, Middle Initial) (Print)		◇	(d) POD check in stow/condition when removed from container		
d. STREET ADDRESS		○	(e) Release of custody by discharge stevedore		
e. CITY, STATE, AND ZIP CODE		*	(f) POD use (Optional)		

Retain this form for proof of shipment for return transport at government expense or proof of POV Import Control Program participation.

31. AFTER INITIAL INSPECTION, RECORD ONLY MARS EXPOSING BARE METAL AND/OR STRUCTURAL DAMAGE.

32. ENTRY NUMBER (US Customs use only)

POV CONDITION CODES						
BE - Bent	CR - Cracked	LO - Loose	MI - Mildewed	RU - Rubbed	TO - Torn
BR - Broken	DE - Dent	MA - Marred	PF - Paint Faded	SC - Scratched	WD - Badly Worn
CH - Chipped	GO - Gouged	MG - Missing	RS - Rusted	SO - Soiled	

33. INTERIOR CONDITION	CODE	34. ACCESSORIES	IN BOX	LOOSE	35. PROCESSING SERVICE	POE	POD
a. FRONT SEATS		a. CATALYTIC CONVERTER/PELLETS			a. ADD/DRAIN FUEL		
b. REAR SEAT		b. SIDE MIRRORS					
c. REAR MIRROR		c. ANTENNA			b. CONNECT/DISCONNECT BATTERY		
d. FRONT SEAT BELTS		d. FAN BELT					
e. REAR SEAT BELTS		e. FENDER SKIRTS					
f. ASH TRAYS		f. FIRE EXTINGUISHER					
g. FLOOR MATS		g. FIRST AID KITS			c. PACK ACCESSORIES		
h. DOOR PANELS		h. CIGARETTE LIGHTER					
i. ARM RESTS		i. HAND TOOLS/FLASHLIGHT					
j. REAR SPEAKERS (Additional)		j. HUB CAPS			d. OTHER		
k. CUSHION		k. JACK/LUG WRENCH					
l. UPHOLSTERY		l. JUMPER CABLES					
m. RADIO (AM, FM, Tape)		m. LUGGAGE RACK					
n. CB RADIO		n. BLANKET					
o. CARPET		o. WARNING TRIANGLE/TROUBLE LIGHT					
p. CLOCK		p. SPARE TIRE					

36. DOD POV IMPORT CONTROL PROGRAM (X appropriate box for all vehicles)

a. THE VEHICLE DESCRIBED ABOVE:

- [ ] (1) Does not have a manufacturer's label affixed certifying its conformance with US EPA emission standards. (Bonding with US Customs required.)
- [ ] (2) Does not have a manufacturer's label affixed and is pre 75 diesel powered or pre 68 gasoline powered vehicle and is not regulated under CAA.
- [ ] (3) Was certified as meeting US EPA emission standards without using a catalyst or was shipped overseas prior to 1 March 1975.
- [ ] (4) Requires a catalyst and/or operable oxygen sensor to meet US EPA emissions standards (Select appropriate options under Import or Export sections.)

b. IMPORT (If POV is equipped with an oxygen sensor, option 3 may also have to be marked.)

(1) The catalyst was removed prior to use overseas and:
- [ ] (a) Has been reinstalled prior to shipment. (Proof of installation required.)
- [ ] (b) Will be reinstalled in accordance with the EPA Waiver.

(2) The catalyst was not removed prior to use overseas and:
- [ ] (a) A new catalyst has been installed prior to shipment. (Proof of installation required.)
- [ ] (b) A new catalyst is accompanying the vehicle and will be installed in accordance with the EPA Waiver.

(3) The POV requires an oxygen sensor to meet US EPA emissions standards and:
- [ ] (a) An operable sensor has been installed prior to shipment. (Proof of installation required.)
- [ ] (b) An operable sensor is accompanying the vehicle and will be installed in accordance with the EPA Waiver.
- [ ] (4) No replacement catalyst and/or operable oxygen sensor is accompanying this vehicle. The owner must post bond with US Customs prior to vehicle release at the US Port of Entry, except if a NEW catalyst and/or oxygen sensor is presented to Customs prior to the release of the vehicle.

c. EXPORT (If POV is equipped with an oxygen sensor, X as applicable.)

(1)	[ ] Catalyst	[ ] Oxygen sensor has been removed and is accompanying the vehicle.
(2)	[ ] Catalyst	[ ] Oxygen sensor will be removed at the overseas port prior to using leaded gasoline.
(3)	[ ] Catalyst	[ ] Oxygen sensor will be replaced overseas just prior to turn-in or a new catalyst/oxygen sensor will accompany the vehicle when it is returned to the US.

- [ ] (4) The vehicle owner does not desire to participate in the DoD POV Import Control Program. (Bond with US Customs required upon return.)

DD FORM 788-1, SEP 1998 PREVIOUS EDITION IS OBSOLETE. Designed using PerformPro, WHS/DIOR

Figure 408-2. DD Form 788-1, Private Vehicle Shipping Document for Van

CONDITIONS GOVERNING SHIPMENT

I UNDERSTAND AND ACCEPT THE TERMS UNDER WHICH THIS VEHICLE WILL BE TRANSPORTED OVERSEAS AS SET FORTH IN EXISTING REGULATION, i.e.:

1. That only one (1) privately-owned vehicle is being transported overseas under permanent change of station orders for the owner and/or his family as personal property, and that it is free of any legal encumbrance that would preclude its shipment and is not intended for resale. Owner must also retain a second (extra) set of keys.

2. That this vehicle contains no personal property in excess of that authorized in regulations of the Service concerned. I further understand that personal property shipped will only include those items that can fit in the container normally provided for vehicular tools and accessories.

(3) That no land transportation is authorized at Government expense except as specified in Section 12 of the Missing Persons Act, as amended, and 10 USC Section 2634(a).

(4) That failure of the owner to provide sufficient permanent type antifreeze to protect the cooling system to minus 20 degrees F (or lower if determined to be necessary by the shipping port) relieves the Government of any liability for damage due to freezing.

THIS CERTIFICATE constitutes authority for the placing in available storage chosen by the port, at the complete expense of the owner and at no cost whatsoever to the Government, the vehicle herein property of above named owner, (1) by the port of embarkation in the event that shipment of privately-owned vehicles therefrom is suspended or terminated because of a national emergency, and (2) by the port of debarkation in the event that the automobile is not picked up by the owner or his agent within forty-five (45) days after dispatch of the notification of its arrival.

I further understand that should the vehicle be placed in such storage, the Government, thenceforth, would not be responsible for its release or return to the owner or agent.

37. DELIVERY RECEIPT

a. EXCEPTIONS

(1) BY OWNER	(2) VERIFICATION OR DISAGREEMENT WITH REASONS

b. TERMINAL SERVICE - PICKUP *(If as applicable. If unsatisfactory, specify.)* ☐ SATISFACTORY ☐ UNSATISFACTORY

38. MISCELLANEOUS INFORMATION

39. I HEREBY ACKNOWLEDGE RECEIPT OF MY VEHICLE IN THE CONDITION IN WHICH I TURNED IT IN TO THE U.S. GOVERNMENT REPRESENTATIVE FOR TRANSSHIPMENT, EXCEPT AS NOTED ABOVE.

a. SIGNATURE OF OWNER OR AGENT	b. DATE *(YYYYMMDD)*

40. SIGNATURE OF VERIFYING U.S. GOVERNMENT REPRESENTATIVE	41. NAME OF PORT

DD FORM 788-1 (BACK), SEP 1998

Figure 408-2. DD Form 788-1, Private Vehicle Shipping Document for Van (Cont'd)

PRIVATE VEHICLE SHIPPING DOCUMENT FOR MOTORCYCLE

TCMD DATA	1. DOC ID (1-2) TP1	2. CONTAINER NO. (4-8)	3. CONSIGNOR (9-14)	4. COMM-EX (15-19)	5. POE (21-23)	6. POD (24-26)	7. PACK (28-29)
8. TRANSPORTATION CONTROL NUMBER (30-46)			9. CONSIGNEE (47-52)	10. RDD (54-56)	11. TR ACCOUNT (64-67)	12. PIECES (68-71)	13. WEIGHT (72-76)
14. CUBE (77-79)	15. DOC ID (1-3) TP8	16. POV YR. MAKE (5-14)		17. OWNER'S LAST NAME (64-68)		18. F & MI (67-68)	19. GRADE (68-70)
20. STATE (71-72)	21. LICENSE NUMBER (73-77)		21. COLOR (78-80)	22. BODY TYPE	23. VEHICLE IDENTIFICATION NUMBER		
24. ODOMETER READING		25. VESSEL (Voyage Number)		26. AUTHORIZATION CHARGES PAID, ETC.		27. DATE LOADED (YYYYMMDD)	
28. STOWAGE LOCATION			29. BILLING ADDRESS FOR NOTIFICATION PURPOSES				

30. Inspected in my presence, condition acknowledged as marked below, and conditions governing shipment on back accepted.	f. (1) USER CODE	(2) INSPECTION	(3) DATE (YYYYMMDD)	(4) INSPECTOR'S PRINTED NAME (Last, First, Middle Initial)
	X	(a) Turn in joint inspection - owner/agent & Government representative		
a. DATE (YYYYMMDD)	T	(b) POE use (Optional)		
b. SIGNATURE OF OWNER OR AGENT	□	(c) POE check in stow/condition when stuffed in container		
c. NAME OF AGENT (Last, First, Middle Initial) (Print)	◇	(d) POD check in stow/condition when removed from container		
d. STREET ADDRESS	○	(e) Release of custody by discharge stevedore		
e. CITY, STATE, AND ZIP CODE	*	(f) POD use (Optional)		

Retain this form for proof of shipment for return transport at government expense or proof of POV Import Control Program participation.

31. AFTER INITIAL INSPECTION, RECORD ONLY MARS EXPOSING BARE METAL AND/OR STRUCTURAL DAMAGE.

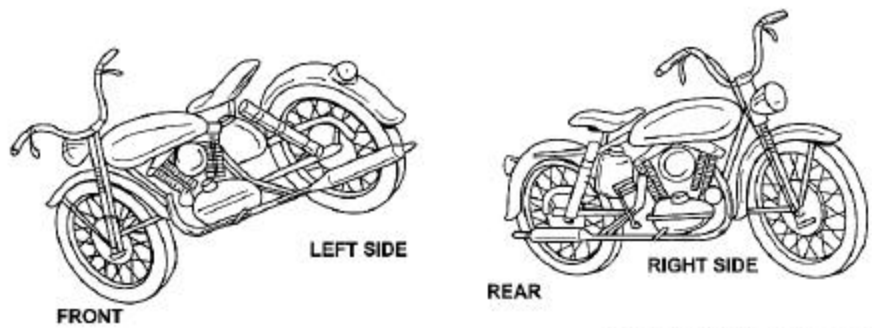

32. ENTRY NUMBER (US Customs use only)

POV CONDITION CODES						
	BE - Bent	CR - Cracked	LO - Loose	MI - Mildewed	RU - Rubbed	TO - Torn
	BR - Broken	DE - Dent	MA - Marred	PF - Paint Faded	SC - Scratched	WD - Badly Worn
	CH - Chipped	GO - Gouged	MG - Missing	RS - Rusted	SO - Soiled	

33. INTERIOR CONDITION	CODE	34. ACCESSORIES	IN BOX	LOOSE	35. PROCESSING SERVICE	POE	POD
a. FRONT SEATS		a. CATALYTIC CONVERTER/PELLETS			a. ADD/DRAIN FUEL		
b. REAR SEAT		b. SIDE MIRRORS					
c. REAR MIRROR		c. ANTENNA			b. CONNECT/DISCONNECT BATTERY		
d. FRONT SEAT BELTS		d. FAN BELT					
e. REAR SEAT BELTS		e. FENDER SKIRTS			c. PACK ACCESSORIES		
f. ASH TRAYS		f. FIRE EXTINGUISHER					
g. FLOOR MATS		g. FIRST AID KITS			d. OTHER		
h. DOOR PANELS		h. CIGARETTE LIGHTER					
i. ARM RESTS		i. HAND TOOLS/FLASHLIGHT					
j. REAR SPEAKERS (Additional)		j. HUB CAPS					
k. CUSHION		k. JACK/LUG WRENCH					
l. UPHOLSTERY		l. JUMPER CABLES					
m. RADIO (AM, FM, Tape)		m. LUGGAGE RACK					
n. CB RADIO		n. BLANKET					
o. CARPET		o. WARNING TRIANGLE/TROUBLE LIGHT					
p. CLOCK		p. SPARE TIRE					

36. DOD POV IMPORT CONTROL PROGRAM (X appropriate box)

THE MOTORCYCLE DESCRIBED ABOVE:

- [ ] a. Was manufactured after January 1, 1978 and does not have a manufacturers label affixed certifying its conformance with US EPA emissions standards. The owner must post a bond with US Customs prior to vehicle release at the US Port of Entry.
- [ ] b. Was manufactured after January 1, 1978 and does have a manufacturers label affixed certifying its conformance with US EPA emissions standards.
- [ ] c. Is not subject to the regulations under the Clean Air Act because it was manufactured before January 1, 1978.

DD FORM 788-2, SEP 1998 PREVIOUS EDITION IS OBSOLETE. Designed using Perform Pro, WHS/DIOR

Figure 408-3. DD Form 788-2, Private Vehicle Shipping Document for Motorcycle

CONDITIONS GOVERNING SHIPMENT

I UNDERSTAND AND ACCEPT THE TERMS UNDER WHICH THIS VEHICLE WILL BE TRANSPORTED OVERSEAS AS SET FORTH IN EXISTING REGULATION, i.e.:

1. That only one (1) privately-owned vehicle is being transported overseas under permanent change of station orders for the owner and/or his family as personal property, and that it is free of any legal encumbrance that would preclude its shipment and is not intended for resale. Owner must also retain a second (extra) set of keys.

2. That this vehicle contains no personal property in excess of that authorized in regulations of the Service concerned. I further understand that personal property shipped will only include those items that can fit in the container normally provided for vehicular tools and accessories.

(3) That no land transportation is authorized at Government expense except as specified in Section 12 of the Missing Persons Act, as amended, and 10 USC Section 2634(a).

(4) That failure of the owner to provide sufficient permanent type antifreeze to protect the cooling system to minus 20 degrees F (or lower if determined to be necessary by the shipping port) relieves the Government of any liability for damage due to freezing.

THIS CERTIFICATE constitutes authority for the placing in available storage chosen by the port, at the complete expense of the owner and at no cost whatsoever to the Government, the vehicle herein property of above named owner, (1) by the port of embarkation in the event that shipment of privately-owned vehicles therefrom is suspended or terminated because of a national emergency, and (2) by the port of debarkation in the event that the vehicle is not picked up by the owner or his agent within forty-five (45) days after dispatch of the notification of its arrival.

I further understand that should the vehicle be placed in such storage, the Government, thenceforth, would not be responsible for its release or return to the owner or agent.

37. DELIVERY RECEIPT

a. EXCEPTIONS

(1) BY OWNER	(2) VERIFICATION OR DISAGREEMENT WITH REASONS

b. TERMINAL SERVICE - PICKUP (X as applicable. If unsatisfactory, specify.) ☐ SATISFACTORY ☐ UNSATISFACTORY

38. MISCELLANEOUS INFORMATION

39. I HEREBY ACKNOWLEDGE RECEIPT OF MY VEHICLE IN THE CONDITION IN WHICH I TURNED IT IN TO THE U.S. GOVERNMENT REPRESENTATIVE FOR TRANSSHIPMENT, EXCEPT AS NOTED ABOVE.

a. SIGNATURE OF OWNER OR AGENT	b. DATE (YYYYMMDD)

40. SIGNATURE OF VERIFYING U.S. GOVERNMENT REPRESENTATIVE	41. NAME OF PORT

DD FORM 788-2 (BACK), SEP 1998

Figure 408-3. DD Form 788-2, Private Vehicle Shipping Document for Motorcycle (Cont'd)

US Department of Transportation

National Highway Traffic Safety Administration

BOND TO ENSURE CONFORMANCE WITH MOTOR VEHICLE SAFETY AND BUMPER STANDARDS

OMB No. 2127-0002

PL100-562, 15 USC 1397, and 1916

Section 591.50(f)

(To redeliver vehicle, to produce documents, to perform conditions of release, such as to bring vehicle into conformance with all applicable federal Motor Vehicle Safety and Bumper Standards)

Know All Men by These Presents That_____

name of principal; if a corporation the State of Incorporation

of _____, as principal

street address or post office box number, city, state, Zip Code

and _____of _____

Name, state of Incorporation, if any — Address

and_____of_____

Name, state of Incorporation, if any — Address

as sureties, are held and firmly bound unto the UNITED STATES OF AMERICA in the sum of of_____ dollars ($_____), which represents 150% of the entered value of the following described motor vehicle as determined by the U. S. Customs Service:

_____

Model year, make, series, engine, and chassis number

for the payment of which we bind ourselves, our heirs, executors, administrators, successors, and assigns (jointly and severally), firmly by these presents

WITNESS our hands and seals this_____day of_____,199_____

WHEREAS, motor vehicles may be entered under the provisions of section 108, National Traffic and Motor Vehicle Safety Act of 1966, as amended; and section 106 of the Motor Vehicle Information and Cost Savings Act; and

WHEREAS, pursuant to 49 CFR Part 591, a regulation promulgated under the provisions of section 108, National Traffic and Motor Vehicle Safety Act of 1966, as amended, the above-bounden principal desires to import permanently the motor vehicle described above, which is a motor vehicle that was not originally manufactured to conform with the Federal motor vehicle safety standards, and bumper standards; and

WHEREAS, pursuant to 49 CFR Part 592, a regulation promulgated under the provisions of section 108, National Traffic and Motor Vehicle Safety Act of 1966, as amended, the above-bounden principal has been granted the status of Registered Importer of motor vehicles not originally manufactured to conform with the Federal motor vehicle safety standards (or, if not Registered Importer, has a contract with a Registered Importer covering the motor vehicle described above); and

WHEREAS, pursuant to 49 CFR 593, a regulation promulgated under the provisions of section, 108, National Traffic and Motor Vehicle Safety Act of 1966, as amended, the Administrator of the National Highway Traffic Safety Administration as determined that the motor vehicle described above is eligible for importation into the United States; and

WHEREAS, the motor vehicle described above has been imported at the port _____

for consumption on entry No._____, dated _____, 199_____

NOW, THEREFORE, THE CONDITION OF THIS OBLIGATION IS SUCH THAT-

(1) The above-bounden principal (the "principal", in consideration of the permanent admission into the United States of the motor vehicle described above (the "vehicle'7, voluntarily undertakes and agrees to have such vehicle brought into conformity with all applicable Federal motor vehicle safety and bumper standards within 120 days after such importation, as specified by the Administrator of the National Highway Traffic Safety Administration (the "Administrator");

(2) The principal shall then file, or If not a Registered Importer shall then cause the Registered Importer of the Vehicle to file, with the Administrator, a certificate that the vehicle compiles with each Federal motor vehicle safety standard in effect the year that the vehicle was manufactured and which applies in such year to the vehicle, and that the vehicle complies with the Federal bumper standard (if applicable);

Form HS-474 (1-90)

Figure 408-4. Bond to Ensure Conformance with Motor Vehicle Safety and Bumper Standards

(3) The principal, if a Registered Importer, shall not release custody of the vehicle to any person for license or registration for use on public roads, streets, or highways, or license or register the vehicle from the date of entry until 30 calendar days after it has certified compliance of the vehicle to the Administrator, unless the Administrator notifies the principal before 30 days that (s)he has accepted such certification and the vehicle and bond maybe released, except that no such release shall be permitted, before or after the 30th calendar day, if the principal has received written notice from the Administrator that an inspection of such vehicle will be required, or that there is reason to believe that such certification is false or contains a misrepresentation;

(4) And if the principal has received written notice from the Administrator that an inspection is required, the principal shall cause the vehicle to be available for inspection; and the vehicle and bond shall be promptly released after completion of an inspection showing no failure to comply. However, if the inspection shows a failure to comply, the vehicle and bond shall not be released until such time as the failure to comply ceases to exist;

(5) And if the principal has received written notice from the Administrator that there is reason to believe that the certificate is false or contains a misrepresentation, the vehicle or bond shall not be released until the Administrator is satisfied with the certification and any modification thereof;

(6) And if the principal has received written notice from the Administrator that the vehicle has been found not to comply with all applicable Federal Motor vehicle safety and bumper standards, and written demand that the vehicle be abandoned to the United States, or delivered to the Secretary of the Treasury for the export (at no cost to the United States), the principal shall abandon the vehicle to the United States, or shall deliver the vehicle, or cause the vehicle to be delivered to, the custody of the District Director of Customs of the port of entry listed above, or any other port of entry, and shall execute all documents necessary for exportation of the vehicle from the United States, at no cost to the United States; or in default of abandonment or redelivery after proper notice by the Administrator to the principal, the principal shall pay to the administrator the amount of this obligation;

Then this obligation shall be void; otherwise it shall remain in full force amd effect.
Signed, sealed, and delivered in the presence of

_____
Name

_____
Address

_____(SEAL)
Name Address (Principal)

_____
Name

_____
Address

_____(SEAL)
Name Address (Surety)

CERTIFICATE AS TO CORPORATE PRINCIPAL

I,_____certify that I am the_____ of the corporation named as principal in the within bond; that_____, who signed the bond on behalf of the principal, was then_____of said corporation; that I know his/her signature, and his/her signature thereto is genuine; and that said bond was duly signed, sealed and attested for and in behalf of said corporation by authority of its governing body.

_____(CORPORATE SEAL)

(To be used when a power of attorney has been filed with NHTSA, and may be executed by secretary, assistant secretary, or other officer.)

Form HS-474 (1-90)

Figure 408-4. Bond to Ensure Conformance with Motor Vehicle Safety and Bumper Standards (Cont'd)

FORMAT

(Date)

SUBJECT: Request for Shipment of POV through CONUS/OCONUS Alternate Port/VPC

TO: (Origin TO)

1. Request authority to ship my POV through _____(alternate port/VPC)_____.

Vehicle can be delivered to port on ___(date)____, for shipment to__(destination) .

2. Vehicle date is as follows:

   a. Make

   b. State and License No.

   c. Body Type

   d. Year

3. I acknowledge that cost incurred by selection of an alternative port that exceeds the regular routing costs must be charged to me.

(Member's/employee's name/grade)

(Address)

(Telephone No.)

(Origin TO) 1st Ind (Date)

SUBJECT: Request for Shipment of POV Through Alternative Port

1. Permission (granted/not granted).

2. Reason(s) not granted.

(TO)

Figure 408-5. Request for Shipment of POV Through CONUS/OCONUS Alternate Port/VPC Format

PAY ADJUSTMENT AUTHORIZATION

NOTE: If member has been transferred, forward this authorization to the officer currently maintaining the member's pay record.

MEMBER (Last name) (First) (Middle)	SSAN	GRADE/RANK/RATE	BRANCH OF SERVICE	DATE

PAY GRADE NO.	LAST PAY RECORD EXAMINED (If applicable)	AMOUNT	APPROPRIATION DATA

FROM	NAME OF ACCOUNTABLE D.O.	
	SYMBOL NO.	G.A.O. EXCEPTION CODE

TO

YOU ARE HEREBY AUTHORIZED TO

☐ CHARGE ☐ CREDIT

THE MILITARY PAY RECORD OF THE MEMBER LISTED ABOVE

EXPLANATION AND/OR REASON FOR ADJUSTMENT

The above adjustment is based on a thorough examination of all available records. If the Disbursing Officer has knowledge that a previous adjustment has been made or why the adjustment should not be made for the same item, this authorization should be returned with a brief statement of the reason for failure to make adjustment.

FROM	CERTIFYING OFFICER (Name, rank/grade, and signature)

CERTIFICATE

I CERTIFY that the adjustment indicated above has been entered on the above-named member's Military Pay Record. (If adjustment has not been entered, give explanation on reverse over D.O.'s signature and symbol number.)

TO

TYPED NAME AND GRADE OF D.O.	
D.O. SYMBOL NO.	DATE
SIGNATURE	

DD FORM 139, MAY 53 (EG) EDITION OF THIS FORM NOT HAVING SSAN IS OBSOLETE AFTER 30 JUN 69.

Form approved by Comp. Gen., U.S. April 23, 1953

Designed using Perform Pro, WHS/DIOR, Jun 94

Figure 408-6. DD Form 139, Pay Adjustment Authorization

CASH COLLECTION VOUCHER			DISBURSING OFFICE COLLECTION VOUCHER NUMBER RECEIVING OFFICE COLLECTION VOUCHER NUMBER	
RECEIVING OFFICE	ACTIVITY *(Name and location)*			
	RECEIVED AND FORWARDED BY *(Printed name, title and signature)*			DATE
DISBURSING OFFICE	ACTIVITY *(Name and location)*			
	DISBURSING OFFICER *(Printed name, title and signature)*		DISBURSING STATION SYMBOL NUMBER	DATE
PERIOD: From			To	
DATE RECEIVED	NAME OF REMITTER DESCRIPTION OF REMITTANCE	DETAILED DESCRIPTION OF PURPOSE FOR WHICH COLLECTIONS WERE RECEIVED	AMOUNT	ACCOUNTING CLASSIFICATION
			TOTAL	0.00

DD FORM 1131, APR 57 (EF) PREVIOUS EDITION MAY BE USED. Form approved by Comptroller General, U.S. 24 January 1956

Figure 408-7. DD Form 1131, Cash Collection Voucher

REQUEST FOR POV SHIPMENT -- CHANGE IN HOME PORT/VPC FORMAT

FROM: TO

TO: CDR MTMC ALEXANDRIA VA//MTPP//

SUBJECT: REQUEST FOR SHIPMENT OF POV - CHANGE OF HOME PORT

1. CHANGE OF HOME PORT: (VESSEL NAME)

2. NUMBER OF VEHICLES:

3. PICKUP DATE:

4. FINAL PICKUP DATE:

5. ORIGIN:

6. DESTINATION:

7. PICKUP POINT:

8. ADD:

9. SPECIAL REQUIREMENTS: (NUMBER OF OVERSIZED POVS BEING SHIPPED, ATTACHED CAMPER SHELLS/CUSTOMIZED CAMPERS OR VANS.)

10. POC/TELEPHONE/FAX ORIGIN:

11. POC/TELEPHONE/FAX DESTINATION:

Figure 408-8. Request for POV Shipment -- Change in Home Port/VPC Format

.

CHAPTER 409

SHIPMENT PROCEDURES FOR PRIVATELY OWNED FIREARMS (POFS) AND AMMUNITION

A. GENERAL

This Chapter provides policies and procedures for movement of a member's/employee's POFs and ammunition, both interstate and import/export, to and from the US.

B. LIMITATIONS AND PROHIBITIONS

1. War Trophy Firearms. The shipment of personal war souvenirs or trophies is strictly forbidden without an official authorization by the President of the US and designation by the SECDEF. Currently, such firearms must have been registered with a DD Form 603, Registration of War Trophy Firearm, (Figure 409-1) issued prior to 13 March 1973. Importation of unit war trophies or historically significant trophies or equipment is prohibited without approval of the SECDEF and appropriate Service Secretary.

REGISTRATION OF WAR TROPHY FIREARM

The original of this registration form will be retained by the person authorized possession. This registration is not transferable.

1. THEATER		
2. NAME OF OWNER *(Last name, first name, middle initial)*	3. SERVICE NO./SSAN	4. GRADE
5. ORGANIZATION		
6. PERMANENT HOME ADDRESS *(Street, City, State and ZIP Code)*		
7. DESCRIPTION OF FIREARM		
a. MAKE	b. TYPE *(Rifle, pistol, shotgun, etc.)*	c. MODEL
d. SERIAL NUMBER	e. CALIBER	f. COUNTRY OF MANUFACTURE
8. DATE	9. TYPED NAME, GRADE, AND ORGANIZATION OF EXECUTING OFFICER	
10. STATION	11. SIGNATURE OF EXECUTING OFFICER	

DD FORM 603, OCT 51 (EG) USAFPC V1.00

Figure 409-1. DD Form 603, Registration of War Trophy Firearm

2. Unit War Trophies/Historically Significant Trophies. Importation of unit war trophies or historically significant trophies or equipment is prohibited without approval of the SECDEF and Service Secretary. Importation must be accomplished under Service regulations.

3. Importation of foreign and domestic semi-automatic assault weapons is prohibited.

4. Importation of machineguns, short barrel shotguns, short barrel rifles, silencers, destructive devices, and certain other concealable firearms is prohibited.

5. The JTR/JFTR prohibits shipment of privately owned live ammunition as part of a member's/employee's HHG or UB. For shipping purposes under the JTR/JFTR, live ammunition is considered as being ammunition that contains explosive components; i.e., unexpended primer or propellant powder. It does not include expended or unprimed cartridge casings, empty or spent shotgun shells, shotgun shot or pellets or souvenirs used for decorative purposes. Any reference to ammunition in this Chapter is applicable only to ammunition that may be carried as accompanied (checked) baggage IAW carriers' regulations or that is being returned to the CTUS as other than HHG or UB.

C. AUTHORIZATION

1. Shipment of Firearms Within CONUS. Members/employees are authorized to ship all conventional firearms, antique firearms, war trophies, and surplus military firearms, provided the owner is in possession of licenses and permits or documentation required by law.

2. Exportation of Firearms and Ammunition from the US.

a. Customs Form 4455, Certificate of Registration (Figure 409-2) should be executed by the member when shipping firearms or ammunition from the US to an overseas area. This form must be completed prior to departure from the US at any USCS office (http://www.customs.treas.gov). The form establishes that the firearms or ammunition were previously taken out of the US by the member on the member's subsequent return.

DEPARTMENT OF THE TREASURY
UNITED STATES CUSTOMS SERVICE

Form Approved. OMB No. 1515-0014

CERTIFICATE OF REGISTRATION

NO.

19 CFR 10.8, 10.9, 10.68, 148.1, 148.8, 148.32, 148.37

(NOTE: Number of copies to be submitted varies with type of transaction. Inquire at Port Director's office as to number of copies required.)

VIA (Carrier)	B/L or INSURED NO.	DATE

NAME, ADDRESS, AND ZIP CODE TO WHICH CERTIFIED FORM IS TO BE MAILED (If Applicable)

ARTICLES EXPORTED FOR:

- ☐ ALTERATION*
- ☐ REPAIR*
- ☐ USE ABROAD
- ☐ REPLACEMENT
- ☐ PROCESSING*
- ☐ OTHER, (specify) _____

* **NOTE:** *The cost or value of alterations, repairs, or processing abroad is subject to customs duty.*

LIST ARTICLES EXPORTED

Number Packages	Kind of Packages	Description

SIGNATURE OF OWNER OR AGENT (Print or Type and Sign) | DATE

The Above-Described Articles Were:

EXAMINED		LADEN under my supervision	
DATE	PORT	DATE	PORT
SIGNATURE OF CUSTOMS OFFICER		SIGNATURE OF CUSTOMS OFFICER	

CERTIFICATE ON RETURN

Duty-free entry is claimed for the described articles as having been exported without benefit of drawback and are returned unchanged except as noted: (use reverse if needed)

SIGNATURE OF IMPORTER (Print or Type and Sign) | DATE

NOTE: Certifying officers shall draw lines through all unused spaces with ink or indelible pencil.

PAPERWORK REDUCTION ACT NOTICE: The Paperwork Reduction Act of 1980 says we must tell you why we are collecting this information, how we will use it, and whether you have to give it to u ask for the information to carry out the Customs Service laws of the United States. We need the information to ensure that importers/exporters are complying with these laws in claiming duty free entr exported articles which are then returned into the United States. Your response is mandatory and to your benefit.

Customs Form 4455 (090298)

Figure 409-2. Customs Form 4455, Certificate of Registration

b. In lieu of certification on CF 4455, proof of possession in the US may be established by a bill of sale, a receipt or other such document, a HHG inventory or packing list, or an application to ship personal property so long as the article is adequately described therein.

3. Importation of Firearms to the US.

a. Members may import into the US any reasonable number of POFs and amount of ammunition, subject to the following:

(1) The member must be on active duty outside the US or have been on active duty outside the US within the 60-day period immediately preceding importation.

(2) The firearms and ammunition must be suitable for sporting purposes, or properly registered war trophy firearms, as set forth herein. Prohibited firearms may not be imported. Surplus military firearms may not be imported unless the member can demonstrate previous ownership in the US of the firearms to US border clearance officials.

(3) The firearms and ammunition must be intended solely for the personal use of the member and not be intended for resale or for a gift to others.

(4) Import must be to the place of residence of the member or to his or her permanent duty station.

(5) Import must be IAW all applicable federal laws and state, territorial, or local laws. Members should consult Bureau of Alcohol, Tobacco and Firearms Publication 5300.5, State Laws and Published Ordinances-Firearms, for detailed information regarding state laws.

b. Import Permit Requirements. Application to import firearms and ammunition must be made on ATF Form 6 Part II (5330.3B), Application and Permit for Importation of Firearms, Ammunition and Implements of War (Figure 409-3). The completed application should be sent to the Director, Bureau of Alcohol, Tobacco, and Firearms, ATTN: Firearms and Explosives Imports Branch, Washington, D. C. 20226. BATF approved permits are required for the importation of all personally owned firearms and ammunition, regardless of date of purchase, except as noted below.

OMB NO. 1512-0016

DEPARTMENT OF THE TREASURY
BUREAU OF ALCOHOL, TOBACCO AND FIREARMS

APPLICATION AND PERMIT FOR IMPORTATION OF FIREARMS, AMMUNITION AND IMPLEMENTS OF WAR

FOR USE BY MEMBERS OF THE UNITED STATES ARMED FORCES *(Submit in triplicate)*

FOR ATF USE ONLY
PERMIT NO.
VALID FOR 12 MONTHS AFTER THE DATE OF APPROVAL (ITEM 20 BELOW)

SECTION I - APPLICATION

1. RETURN APPROVED PERMIT TO *(Enter name, address and ZIP Code if different than applicant's)*

2. APPLICANT'S NAME AND ADDRESS *(Including ZIP Code)*

TELEPHONE NUMBER

3. NAME AND ADDRESS OF SELLER

4. NAME AND ADDRESS OF SHIPPER

5. PRESENT OR LAST FOREIGN DUTY STATION

6. COUNTRY OF EXPORTATION

7. DESCRIPTION OF FIREARMS AND AMMUNITION *(For firearms, enter (SG) - Shotgun; (RI) - Rifle; (PI) - Pistol; (RE) - Revolver)*

	NAME AND ADDRESS OF MANUFACTURER a.	TYPE (SG) (RI) (PI) (RE) b.	CALIBER, GAUGE OR SIZE c.	MODEL (MFRS) DESIG. d.	LENGTH OF BARREL e.	OVERALL LENGTH (inches) f.	SERIAL NO. g.	NEW (N) OR USED (U) h.	QUANTITY (Each type) i.	UNIT COST j.
FIREARMS										
AMMUNITION		(Ball Wad cutter, Shot, etc.)								

8. SPECIFIC PURPOSE OF IMPORTATION *(Use additional sheets, if necessary)*

9. ARE YOU NOW OR HAVE YOU BEEN ON ACTIVE DUTY OUTSIDE THE UNITED STATES WITHIN THE 60-DAY PERIOD IMMEDIATELY PRECEDING THIS IMPORTATION? ☐ YES ☐ NO

10. PLACE OF RESIDENCE IN THE UNITED STATES

11. DATE OF ASSIGNMENT TO DUTY STATION WITHIN UNITED STATES

12. BRANCH OF SERVICE

13. DATE OF BIRTH

Under penalties of law, I declare that I have examined this application, including the documents submitted in support of it, and to the best of my knowledge and belief, it is true, correct, and complete, that the transportation to and the receipt and possession by me at my place of residence of the firearms and/or ammunition described above, would not constitute any violation of Title I of the Gun Control Act of 1968 (U.S.C., Title 18 Chapter 44), or Title VII of the Omnibus Crime Control and Safe Streets Act of 1968 (U.S.C. Title 18, Appendix, Sections 1201-1203) or any State law or local ordinance, that the firearms and/or ammunition are intended for my personal use and that no firearm is a surplus military firearm or a firearm as described in 26 U.S.C. 5845(a).

14. SIGNATURE

15. RANK

16. SERIAL NO.

17. DATE

SECTION II - FOR ATF USE ONLY
(Please make no entries in this section)

18. THE APPLICATION HAS BEEN EXAMINED AND THE IMPORTATION OF THE FIREARMS AND AMMUNITION DESCRIBED HEREIN IS:

☐ APPROVED
☐ WITHDRAWN BY APPLICANT WITHOUT ACTION
☐ PARTIALLY APPROVED FOR THE REASON INDICATED ON THE ATTACHED LETTER
☐ RETURNED FOR ADDITIONAL INFORMATION
☐ DISAPPROVED FOR THE REASON INDICATED ON THE ATTACHED LETTER

19. SIGNATURE OF DIRECTOR, BUREAU OF ALCOHOL, TOBACCO AND FIREARMS

20. DATE

ATF F 6 - PART II (5330.3B) (8-97) PREVIOUS EDITIONS ARE OBSOLETE

Figure 409-3. ATF Form 6 Part II (5330.3B), Application and Permit for Importation of Firearms, Ammunition and Implements of War

(1) Permits Not Required. Permits are not required for:

(a) Firearms and ammunition previously taken out of the US by the same member with proof of export.

(b) Antique firearms and replicas of antiques of such firearms if they are designed to use antique ignition systems (e.g., matchlock, flintlock, or percussion cap) or use rimfire or conventional centerfire ammunition that is not available in commercial channels.

(c) Firearms classified as war trophies when accompanied by a properly executed DD Form 603 indicating the firearm was properly acquired and registered during a period designated by the DOD provided such war trophies were previously owned in the US.

(2) Other items or categories exempt from importation procedures as set forth in the CFR Title 27 Paragraph 178.114, Importation by Members of the US Armed Forces.

D. DOD CIVILIAN PERSONNEL

1. Firearms and Ammunition Acquired Overseas. DOD employees who are employed overseas and reside there while so employed are not considered as being residents of a State in the US during that period and, therefore, they may import into the US any firearms or ammunition acquired overseas during their employment that may lawfully be imported subject to the following conditions:

a. The firearms and ammunition must be suitable for sporting purposes, or properly registered war trophy firearms, as set forth herein. Prohibited firearms may not be imported. Surplus military firearms may not be imported unless the employee can demonstrate previous ownership in the US of the firearms to US border clearance officials.

b. The firearms and ammunition must be intended solely for the personal use of the employee and not be intended for resale or for a gift to others.

(1) Import Permit Requirements: Application to import firearms and ammunition must be made on ATF Form 6 Part I (5330.3A), Application and Permit for Importation of Firearms, Ammunition and Implements of War, (Figure 409-4). On the application or an attached sheet, a statement must be included that the applicant is a US citizen returning from employment outside of the US and has resided there during such employment, and that the firearms and ammunition are being imported for personal use and not for resale. The completed application must be sent to the Director, Bureau of Alcohol, Tobacco, and Firearms, ATTN: Firearms and Explosives Imports Branch, Washington, D. C. 20226. BATF approved permits are required for the importation of all personally owned firearms and ammunition, regardless of date of purchase, except as noted below.

OMB No. 1512-0017 (09/30/2000)

DEPARTMENT OF THE TREASURY
BUREAU OF ALCOHOL, TOBACCO AND FIREARMS

APPLICATION AND PERMIT FOR IMPORTATION OF FIREARMS, AMMUNITION AND IMPLEMENTS OF WAR

NOT FOR USE BY MEMBERS OF THE UNITED STATES ARMED FORCES *(Submit in triplicate)*

FOR ATF USE ONLY
PERMIT NO.
VALID FOR 12 MONTHS AFTER THE DATE OF APPROVAL (ITEM 17 BELOW)

SECTION I - APPLICATION

1. FEDERAL FIREARMS LICENSE *(If Any)*
LICENSE NO. | EXPIRATION DATE

2. TELEPHONE NO.

3. COUNTRY OF EXPORTATION

4. NAME AND ADDRESS OF BROKER, if any *(Including ZIP Code)*

☐ Check here if permit is to be returned to broker.

5. APPLICANT'S NAME AND ADDRESS *(Including ZIP Code)*

☐ Check here if permit is to be returned to applicant.

6. NAME AND ADDRESS OF FOREIGN SELLER, if any

7. NAME AND ADDRESS OF FOREIGN SHIPPER

8. DESCRIPTION OF FIREARMS AND AMMUNITION *(For firearms, enter (SG) - Shotgun; (RI) - Rifle; (PI) - Pistol; (RE) - Revolver)*

	NAME AND ADDRESS OF MANUFACTURER a	TYPE (SG), (RI), (PI), (RE) b	CALIBER GAUGE OR SIZE c	QUANTITY (Each type) d	UNIT COST e	US MIL CATEGORY f	MODEL (MFRS) DESIGN g	LENGTH OF BARREL h	OVERALL LENGTH (Inches) i	SERIAL NO. j	NEW (N) OR USED (U) k
FIREARMS											
IMPLEMENTS OF WAR											
AMMUNITION		(Ball Wad-cutter, Shot, etc.)									

9. CERTIFICATION OF ORIGIN. The items sought for importation in block 8:
a. ☐ Do not contain U.S. manufactured parts or components; and
☐ Do not contain foreign manufactured parts or components that were manufactured with U.S. technical data or assistance; or
b. ☐ Contain U.S. manufactured parts or components and/or foreign manufactured parts or components that were manufactured with U.S. technical data or assistance;

10. SPECIFIC PURPOSE OF IMPORTATION *(Use additional sheets, if necessary)*

11. ARE YOU REGISTERED PURSUANT TO THE ARMS EXPORT CONTROL ACT OF 1976 ☐ YES ☐ NO

12. IF "YES", GIVE REGISTRATION NO. AND EXPIRATION DATE

Under the penalties provided by law, I declare that I have examined this application, including the documents submitted in support of it, and, to the best of my knowledge and belief, it is true, correct, and complete.

13. SIGNATURE OF APPLICANT

14. TITLE

15. DATE

SECTION II - FOR ATF USE ONLY *(Please make no entries in this section)*

16. THE APPLICATION HAS BEEN EXAMINED AND THE IMPORTATION OF THE FIREARMS, AMMUNITION, AND IMPLEMENTS OF WAR DESCRIBED HEREIN IS:

☐ APPROVED
☐ PARTIALLY APPROVED FOR THE REASON INDICATED HERE OR ON ATTACHED LETTER
☐ DISAPPROVED FOR THE REASON INDICATED HERE OR ON ATTACHED LETTER
☐ WITHDRAWN BY APPLICANT WITHOUT ACTION
☐ RETURNED WITHOUT ACTION FOR ADDITIONAL INFORMATION

17. SIGNATURE OF THE DIRECTOR, BUREAU OF ALCOHOL, TOBACCO AND FIREARMS

18. DATE

ATF F 6 - PART I (5330.3A) (3-2000) PREVIOUS EDITIONS ARE OBSOLETE

Figure 409-4. ATF Form 6 Part I (5330.3A), Application and Permit for Importation of Firearms, Ammunition and Implements of War

(2) Permits are not required for:

(a) Firearms and ammunition previously taken out of the US by the employee returning them. Proof of export is required.

(b) Antique firearms and replicas of antiques of such firearms if they are designed to use antique ignition systems (e.g., matchlock, flintlock, or percussion cap) or use rimfire or conventional centerfire ammunition that is not available in commercial channels.

(c) Firearms classified as war trophies when accompanied by a properly executed DD Form 603 indicating the firearm was properly acquired and registered during a period designated by the DOD.

E. OTHER IMPORTS

1. In addition to the imports of privately owned firearms and ammunition covered in paragraphs above, the following imports are allowed:

a. A firearm issued to a general or flag officer under the provisions of military regulations. (No import permit required.)

b. Firearms and ammunition imported for, sold or shipped to, or issued for the use of the US or any department or agency thereof, or any State or any department, agency, or political subdivision thereof. (An import permit is required unless the firearms or ammunition is being directly imported by a federal agency.)

c. Firearms or ammunition, with proper documentation, being brought into the US for scientific or research purposes, or for use in connection with competition or training for competitive firing (import permit required).

d. Firearms, other than machine guns, as determined by the BATF to be unserviceable and not restorable to firing condition, being entered into the US as curios, museum pieces, or historical artifacts (import permit required).

e. Any individual (military or civilian) on duty overseas may send a normally permitted firearm to a licensed dealer in the US for repair and subsequent return to the individual at his or her oversea location. The firearm will normally be mailed, with the words "REPAIR AND RETURN" clearly marked on the outside of the package. (No import permit required.)

f. Additional detail on firearm importation requirements can be found in this Regulation, Part V, Chapter 503, Importation of Privately Owned Firearms (POF) and Ammunition and Implements of War.

F. RESPONSIBILITIES OF MEMBERS/EMPLOYEES

Members/Employees will:

1. Ensure all laws and regulations of the US and its territories, foreign countries, and municipalities are complied with regarding the possession, carrying, registration, and shipment of POFs. (See this Regulation, Part V, Chapter 503 and General Instructions of the PPCIG, Volume II, Overseas (http://pweb.eta.mtmc.army.mil/ppcig/index.htm) for additional information.)

2. Obtain and provide copies, upon request, of documentation authorizations, individual licenses, or registration forms for the firearms to be shipped as a part of an authorized personal property shipment.

3. Ensure all firearms are free of explosive charges when turned-over for shipment.

G. APPLICATIONS FOR SHIPMENT OF FIREARMS

All applications for the shipment of firearms and ammunition into the CTUS or for shipments that include firearms must be accompanied by the forms or certificates prescribed by this Regulation, Part V, Chapter 503. A separate DD Form 1299 must be executed when the firearm is not to be packed and shipped with the HHG or UB. The make, model, caliber, and serial number of all firearms to be shipped must be listed on the shipment inventory, whether shipped separately or as part of HHG or UB. It is advisable for the member/employee to obtain a Customs Form 4455 from the nearest US Customs office before shipment from the US as proof of ownership in the US. Upon reentry to the CTUS, the member/employee must provide proof of ownership in the US. The statement "This shipment contains firearms" must be placed in the Description of Articles block on the PPGBL. The counselor should refer to the PPCIG during counseling.

H. SHIPMENT BY THROUGH GOVERNMENT BILL OF LADING (TGBL) DIRECT PROCUREMENT METHOD (DPM)

Under federal law, the carrier or contractor must be notified that firearms are being transported.

I. SHIPMENT THROUGH THE US POSTAL SERVICE

1. The US Postal Service may be used as an alternate method of shipment of handguns and other firearms when offered as an official shipment between TOs as an authorized agent of the federal Government.

2. Registered mail is required for these shipments.

3. For shipments entering the CTUS, a PS Form 2976-A, Customs Declaration and Dispatch Note, (Figure 409-5) must be prepared and affixed to the parcel. The shipment must comply with US Customs certification procedures, i.e., acceptable proof of prior ownership in the US, the USCS-imposed three-firearm limitation, or whether firearm is subject to duty, and must comply with BATF requirements.

4. Pistols, revolvers, and other firearms capable of being concealed on the person (referred to as handguns) are non-mailable by individuals. The DOD and the US Postal Service prohibit

acceptance by military post offices of war trophy firearms, ammunition and handguns for shipment by individuals (USPS Domestic/International Mail Manual, http://www.usps.com).

United States Postal Service
Customs Declaration and Dispatch Note

CP388588729US

Sender's Name and Address *(Nom et adresse de l'expéditeur)*	Addressee's Name and Address *(Nom et adresse du destinataire)*

List of Contents *(Désignation du contenu)* Please Print	Qty.	Value *(Valeur)*	Net Weight *(Poids net)*

Insured No.	Insured Amount	SDR Insured Value	Postage	Gross Weight
V-	US $		US $	lb oz

Check One: ☐ Commercial Sample *(Echantillon commercial)* ☐ Documents ☐ Gift *(Cadeau)* ☐ Merchandise

Sender's Instructions in Case of Nondelivery *(Instructions de l'expéditeur en cas de non-livraison)*	Sender's Signature and Date *(Signature de l'expéditeur et date)*
☐ Return to Sender *(Renvoyer à l'origine)* **NOTE:** Item subject to return charges at sender's expense. ☐ Abandon *(Abandonner)* ☐ Redirect to Address Below *(Réexpédier à):*	I certify that the particulars given in the customs declaration are correct and that this item does not contain any dangerous article prohibited by postal regulations. Notice to senders: Copy 4 of this customs declaration is filed at the post office for 30 days from the date of mailing.

PS Form **2976-A,** Nov 1996 Do not duplicate form without USPS approval. 102595-99-B-2846 Copy 1 - Customs Declaration
CP 72 *(Old C2/CP3/CP2)*

Figure 409-5. PS Form 2976-A, Customs Declaration and Dispatch Note

5. Due to complications that may arise with this method of shipment, TOs must limit use of this service to those situations where the member/employee has departed the area and the shipment could not otherwise be handled through normal shipping methods. Problems which may occur are: lack of adequate storage capability at the destination TOs, inability to effect tracer action until 60 days after shipment was made, and postal service liability rules.

J. REPORTING DISCREPANCIES

Carriers, TOs, and members/employees discovering theft, attempted theft, or non-receipt of firearms must report the incident immediately to their activity commander, DOD Component investigative service, and HQ MTMC/MTOP-O and MTPP-HQ. This report must contain the origin and destination of the shipment; the member's/employee's name, rank/grade, and military Service/Agency; a description and serial number of the firearm; law enforcement agencies notified; and all other information concerning the incident. The DOD Components must

establish procedures to ensure information is submitted through provost marshal or security officer channels to the National Crime Information Center and to the DOD central registry upon discovery of loss, theft, or recovery of lost or stolen firearms.

THIS PAGE INTENTIONALLY LEFT BLANK

CHAPTER 410

SPECIALIZED PROCEDURES

A. SHIPMENT ITV AND TRACING POLICY

1. The carrier must provide ITV service for DOD personal property shipments upon request and at any point during the shipment. The ITV system must have the capability to monitor and report movement progress of any shipment under the carrier responsibility. The carrier must report to the destination TO all anticipated late shipments, including the original RDD, new estimated time of arrival (ETA), present location, and reason for delay.

2. The carrier must trace shipments on customer or Government request and provide a response within 24 hours on domestic shipments and within 120 hours on international shipments. Tracing requests must contain the PPGBL number and the TCN.

3. If a carrier fails to trace a shipment, the destination TO may request immediate suspension action from the origin TO. The destination TO should contact the origin TO and MTMC and provide the following information:

a. Member's/employee's name and SSAN.

b. Carrier's name and SCAC.

c. TCN and PPGBL number.

d. Origin and destination TO.

e. Method of shipment.

f. Date of pick up and RDD.

g. Tracing TO must provide the date and time of tracing request to the carrier.

h. Information concerning request for suspense action taken by the TO for non-response by the carrier.

i. POC, including name, commercial/Defense Switched Network (DSN) telephone number and commercial/DSN Facsimile (Fax) number.

4. When shipments are moving by the DPM, the destination TO must trace with the origin TO and inform MTMC. The tracing TO must provide all the information that is available based upon Paragraph A.3, above.

B. LOSS AND DAMAGE

1. Purpose and Scope. This Paragraph establishes procedures and provides guidance concerning claims for loss or damage to personal property shipments and documents required for processing and adjudication of claims by military Service/Agency claims offices.

2. Report of Loss or Damage. The member/employee must be counseled to:

a. Contact the TO for any assistance required at time of delivery and for any supporting documents required in processing a claim.

b. In conjunction with the carrier, complete Section B and sign the DD Form 1840 (Figure 401-4) at the time of delivery.

c. Retain three signed and completed copies of the DD Form 1840.

d. If additional loss/damage is discovered, annotate the information on the DD Form 1840R (Figure 401-5). Submit all three copies of the completed DD Forms 1840 and 1840R to the claims office within 70 calendar days.

3. Notice of Loss or Damage, DD Form 1840.

a. When the PPSO is notified of loss or damage, the PPSO must:

(1) Retain the carrier provided copy of the DD Form 1840.

(2) Conduct an inspection for loss or damage upon a request by the Service/Agency member/employee or military Service/Agency claims office within 10 workdays of the request and prepare a DD Form 1841, Government Inspection Report (Figure 410-1).

(3) Upon request, provide a copy of the PPGBL and any other shipment documents to assist the member/employee in filing a claim.

(4) Contact the TO for any assistance required at the time of delivery and for any supporting documents required in processing a claim.

b. The Claims offices will return one copy to the member/employee acknowledging receipt for use in filing claim; provide one copy to the carrier for notice of additional loss and/or damage; retain one copy for filing within the claims office; and send a legible copy of the DD Form 1840R to the destination TO, as specified in Block 20 of the PPGBL. DD Forms 1840R may be batch-mailed to the destination TO at least weekly.

4. Distribution of DD Form 1841. The original must be forwarded to the claims judge advocate or investigating officer, with all required supporting documents below.

a. One copy must be provided to the member/employee.

b. One copy must be retained by the TO.

c. One copy will be furnished to the origin TO.

d. One copy will be furnished to the carrier assigned on the PPGBL.

C. INCONVENIENCE CLAIMS

1. The carrier must pay the member/employee an inconvenience claim with a missed pick up, a missed RDD, or missed confirmed SIT delivery date causing inconvenience to the member/employee who requests reimbursement for the expenditure of personal funds for out-of-pocket expenses for lodging, meals, rental/purchase of household necessities, and other directly related miscellaneous expenses that the member/employee has not been reimbursed by the Government. The member/employee must support requests for reimbursement for lodging costs or rental of household necessities with receipts. The carrier's liability for meals and incidental expenses will be the Meals and Incidental Expenses rate for the member/employee and for each family member. Liability for lodging will not exceed the per diem lodging rate, based on the number of people in the member's/employee's family, e.g., the member/employee and spouse would be expected to share one room in a hotel; additional family members, depending on age and sex, may require additional rooms. The carrier is not liable for delays caused by acts of God, acts of public enemy, acts of public authority, mob interference, or through the fault of the Government. Charges will be computed from the day after the RDD specified on the PPGBL as the RDD or GBL correction notice thereof or the date following the day the member/employee obtains quarters, whichever date is the latest, and will be payable through the day of actual delivery of the shipment.

2. The carrier must acknowledge receipt of the claim to the member/employee and/or TO within 15 calendar days of the date of the member's/employee's and/or TO's request. Payment must be made within 30 calendar days of the member's/employee's and/or TO's request. Disputes between the member/employee and carrier must be elevated to the TO for resolution. If local resolution cannot be reached, the claim may be referred to HQ MTMC/MTPP-HQ for final determination of the carrier's liability. If MTMC determines the claim is valid, and carrier refuses to pay or resolve the claim, MTMC may disqualify the carrier from participation in any DOD transportation or storage program. MTMC may transfer the claim to the appropriate military claims Service HQ with a request that the claims service send the claim to a DOD payment center for set-off action.

3. The member/employee should be cautioned that out-of-pocket costs claimed must be for bona fide expenditures over and above what would normally be expended if the shipment had been picked up or delivered on the agreed upon dates. The rental or purchase cost of tangible household items must relate directly to relieving a definite hardship being suffered by the member/employee or the member's/employee's dependents.

D. UNUSUAL OCCURRENCE

1. This Paragraph describes procedures to be followed to provide traffic management support whenever an unusual occurrence as described below occurs. This Paragraph applies to all modes and methods of transportation and storage discussed in this Regulation. The

provisions apply to the shipment and storage of personal property in CONUS and overseas areas. These provisions apply to all unusual occurrences including, but not limited to, the following:

a. Acts of God/natural disasters (such as floods, fires, storms, earthquakes).

b. Strikes, labor disputes, work stoppages.

c. Civil disturbances.

d. Unlawful entries, vandalism, theft.

e. Seizure of a carrier's/contractor's facility for failure to pay just debts.

f. Closure of a carrier's/contractor's facility due to a court order.

g. Carrier service failure/cessation of operations/bankruptcy. (See Paragraph F.)

2. TOs who receive notification of an unusual occurrence (as defined above) must comply with the following actions:

a. Immediately notify the DOD Component and HQ MTMC/MTOP-O. When the unusual occurrence has, or can be expected to have, an adverse effect upon the movement or storage of personal property, notification should be by telephone with immediate follow-up by electronic means. The report must include the following information.

(1) Type and date of the unusual occurrence.

(2) Extent of known damage.

(3) Geographic areas currently affected and/or those that may be affected.

(4) Military installations affected.

(5) Names and addresses of all facilities affected and those that may be affected. Include TGBL carrier/agent facilities, NTS facilities, and DPM contractor's facilities.

(6) Number of shipments involved by military Service/Agency.

(7) Current locations of the affected shipments.

(8) Destination of the affected shipments.

(9) Additional information unique to a strike situation.

b. The TO must provide support and request additional base agencies to support any and all actions identified in Paragraph D.1.a, above. However, during occurrences affecting an installation, normally the on-scene commander takes charge to provide protection to all affected resources under Government control or under control of a Government contractor.

c. In the event that a DOD-approved personal property facility or equipment used in commerce has been affected by the occurrences identified in Paragraph D.1.a, the TO and the carrier, with support of the claims personnel, will:

(1) Determine the extent of damage, photograph conditions, and record findings.

(2) Determine items that may be salvaged and those that require unpacking, drying, cleaning, repacking, etc.

(3) Contact the members/employees involved and give them the opportunity to inspect their property and provide disposition instructions (i.e., discard, deliver to residence, etc.).

(4) When the members/employees are not available to inspect their damaged shipments, determine what items are damaged beyond repair/salvage. Damaged beyond repair items, other than those with intrinsic or sentimental value, will be disposed of with SJA/claims office approval. Notify the member/employee in writing of the loss and provide instructions to file a claim.

(a) The linehaul carrier involved is responsible for the removal/disposal of that property damaged beyond repair.

(b) If no carrier is involved, the TO will dispose of the property IAW military Service/Agency disposal/salvage regulations. Where items can be repaired/salvaged, notify the member/employee and request instructions on repair/disposal. Do not dispose of damaged reparable property without the member's/employee's consent.

(5) Contact the local SJA/claims office for instructions concerning personal property that is damaged while en route to final destination.

(6) Provide the member/employee with as much evidence as available to support the member's/employee's claim.

d. For the following unusual occurrences, PPSO personnel are responsible for verifying that carriers/agents/contractors have completed the following actions:

(1) Theft/Vandalism.

(a) Notify the law enforcement agency(s).

(b) Provide 24-hour security.

(c) Advise the insurance company.

(d) Ensure security devices (doors, locks, etc.) are properly replaced/repaired.

(e) Ensure structural damage is repaired.

(f) Provide a detailed report of loss/damage.

(g) As necessary, begin unpacking/repacking of affected goods. Opened cartons will be repacked, resealed and marked “inspected”.

(h) Clean/repair items. Records will be kept of all items sent out for repair, dry-cleaning, etc.

(i) Obtain a copy of the police report.

(j) Prepare a written report within 10 working days (or as otherwise directed by the PPSO) of all known facts and events in chronological order. Include a statement from each employee involved.

(2) Flood/Storm/Water or Fire/Smoke Damage.

(a) Take actions to prevent additional damage.

(b) Provide 24-hour security.

(c) Advise the insurance company.

(d) Begin unpacking, inspecting, drying, and repacking of affected goods. Cartons opened will be repacked, resealed and marked “inspected”.

(e) Clean/repair items. Records will be kept to identify all items sent out for repair, dry-cleaning, etc.

(f) No items will be discarded until advised to do so by the PPSO.

(g) Provide a detailed report of loss or damage.

(h) Prepare a written report within 10 working days (or as otherwise directed by the PPSO) of all known facts and events in chronological order. Include a statement from each employee involved.

(i) Obtain a copy of the fire inspector’s report.

e. Areas Disrupted by a Strike or Work Stoppage.

(1) In addition to the information required in Paragraph D.2.a.(1), also provide the following:

(a) Labor and management contacts.

(b) Main issue in dispute.

(c) Date disruption began or may begin.

(d) Local union involved, names and telephone numbers of union officials.

(e) Preliminary evaluation of the situation.

(2) Impartiality in Merits of Labor Disputes. The FAR specifies that military representatives must remain impartial in labor disputes. They must refrain from taking a position on the merits of any labor dispute and must refrain from the conciliation, mediation, or arbitration of such disputes. The TO, however, should establish and maintain contact with individuals involved in disputes to ensure that they are taking all possible actions to avoid delays and stoppages in the movement of personal property. If possible, the TO must attempt to obtain a voluntary agreement between management and labor that will permit the continued movement of personal property shipments during the labor dispute. If a general agreement cannot be reached, the TO must seek an agreement for the movement of those shipments required to relieve hardships imposed upon members/employees. In either case, the PPSO's actions may not involve, or appear to involve, the TO in the merits of the dispute.

3. Actions to be Taken by Installation Commanders. The commander of an installation in an area by a strike, embargo, or work stoppage must determine those affected shipments that will cause extreme personal hardship to the member/employee and will require special arrangements for release or delivery. Names of the members/employees and the reasons, in detail, for the declared hardships must be furnished to the MTMC designated representative. Air Force TOs must include the Major Command (MAJCOM) as an information addressee. Before identifying an affected shipment as a hardship case, the TO should coordinate with the installation commander to attempt to provide the member/employee or the member's/employee's family whatever resources may be available, including Government household furnishings and other light housekeeping items, to alleviate the potential hardship. In addition to notification of hardship cases, specify whether military personnel and equipment under control of the installation will be made available to remove such shipments from the affected facilities.

4. Actions to be Taken by MTMC Designated Representatives. Upon notification of an emergency condition affecting or expected to affect the movement or storage of personal property shipments, the following actions must be taken:

a. Immediately notify USTRANSCOM J4, HQ MTMC/MTPP, and the DOD Components of the nature of the unusual occurrence, the extent of the disruption, and the area affected. When warranted by the nature of the situation or at the request of USTRANSCOM or Commander, HQ MTMC, submit periodic progress reports pending return of the area to a normal condition.

b. Provide immediate traffic management guidance to the TO nearest the site of the occurrence and ensure compliance with the provisions of Paragraph D.2.a.

c. Advise all TOs and military ocean and air terminals of the nature of the occurrence and the capability of installations in the affected area to receive personal property shipments.

d. Provide instructions for disposition of shipments currently in transit to the affected area.

e. Provide assistance to the responsible TOs in the diversion or reconsignment of personal property shipments to temporary storage areas and direct the relocation of personal property shipments.

f. Authorize the TO to use carriers'and carriers' agents' facilities located outside the AOR to prevent service failures.

g. During a strike or work stoppage, appoint a strike coordinator to maintain contact with the TO, union officials, and management to assist in the movement of hardship cases. Upon notification from a TO that a member's/employee's frustrated shipment has been declared a hardship, prepare a message to the Commander, HQ MTMC, Attn: MTPP (information copies to the military Service/Agency HQs responsible for the installation) including, but not limited to, the following:

(1) A statement that the commander of the affected installation has determined that a hardship exists. For each hardship case, provide the member's/employee's name, rank/grade, SSAN, branch of Service/Agency, and describe in detail the existing hardship.

(2) Notification of whether the commander of the affected installation will provide military personnel and equipment to remove shipments from the affected facilities to alleviate hardship cases.

(3) Notification that union and management officials agree to removal of such shipments by military personnel and equipment.

(4) A statement that a uniformed military officer and a union representative must be present during removal of personal property shipments and that the use of force or the appearance of force must be avoided, as well as any action that might affect ongoing labor negotiations. In the event of difficulty, removal efforts must be suspended and military personnel removed, and the situation must be reported to the Commander, HQ MTMC. The concurrence of the responsible SJA must be secured before the above message is released.

5. HQ MTMC and USTRANSCOM. Upon receiving notification of an emergency condition that affects, or can be expected to affect, the movement or storage of personal property shipments, HQ MTMC, after consultation with the MTMC SJA and USTRANSCOM, must:

a. Issue specific instructions to responsible elements to ensure the continued movement and security of personal property shipments when a major unusual occurrence encompasses a widespread area.

b. Issue worldwide instructions for disposition of shipments destined to affected areas where restrictions on incoming shipments have been imposed.

c. Provide necessary guidance for the release and movement of shipments to alleviate reported hardship cases.

d. Advise each military Service/Agency HQs of the number of shipments involved, by Service/Agency, and provide information concerning the status of each shipment.

e. Request approval of the assistant secretary of the military department responsible for an affected installation to use installation vehicles and uniformed personnel for removal of shipments required to alleviate hardship cases.

f. Issue specific guidance and instructions to responsible elements to minimize the effects upon the movement of personal property in the event of an unusual occurrence involving major segments of the transportation industry (such as longshoremen or maritime strikes).

g. Comply with the provision of the MTMC Emergency Traffic Management Plan.

h. Coordinate with the military Service/Agencies for the diversion to other codes/modes those personal property shipments in jeopardy of missing the RDD.

i. Direct the carrier or warehouseman to take immediate action to account for, secure, protect, and control all shipments.

E. PERSONAL PROPERTY SHIPMENTS OF DECEASED MEMBERS/EMPLOYEES

This Paragraph sets forth policy and procedures for transportation of personal property of deceased members/employees. It prescribes procedures to be followed at both origin and destination and designates responsibilities for notification and shipment monitoring. This Paragraph applies to all methods and modes of shipment of personal property for deceased members/employees. For guidance on entitlements, processing, and preparation for shipment for members, the sponsoring Service/Agency regulations and the JFTR, par. U5372, HHG Transportation When Member Officially Reported As Dead, Injured, Ill, Absent For More Than 29 Days In A Missing Status, Or Upon Death, par. U5455, POV Transportation Under Unusual Or Emergency Circumstances, and par. U5545, Mobile Home Transportation When Member Officially Reported As Dead, Injured, Ill, Absent For More Than 29 Days In A Missing Status, Or Upon Death apply. For guidance on entitlements, processing, and preparation for shipment for employees, the sponsoring Service/Agency regulations and the JTR, par. C6051, Responsibility, par. C6059, Baggage Transportation, and par. C6060, POV Transportation apply.

1. BLUE BARK Designation. The term “BLUE BARK” must be used to designate a personal property shipment of a deceased member/employee, or deceased dependent of a member/employee.

2. Documentation required to support the movement of personal property belonging to a deceased member/employee is identified in Chapter 401, Paragraph H.3.f. TOs must coordinate with the casualty assistance officer/mortuary officer to ensure they have complied with the DOD Component publication concerning BLUE BARK prior to arranging or effecting for the movement of personal property.

3. Origin TO. In the case of a BLUE BARK shipment, origin TO must:

a. Mark the words “BLUE BARK” in a conspicuous place on all shipping documents.

b. Notify the destination TO by electronic means of the impending BLUE BARK shipment. The destination TO must be provided, as a minimum, the consignee's name and address, the RDD, and the name of the carrier to which the shipment was tendered.

c. Send copies of all documentation (annotated with the term "BLUE BARK") to the destination TO. Advance documentation must be provided in a timely manner to allow the destination TO sufficient time to contact the carrier and consignee before arrival of the shipment.

d. The destination TO must:

(1) Contact the destination agent and the consignee upon receipt of advance documentation to effect coordination of the delivery.

(2) Inform the casualty assistance officer of the projected shipment delivery.

(3) Inspect the shipment upon delivery and remain at the delivery site to record damages and provide assistance.

4. Applies to Civilians Only. While completing and signing the DD Form 1299, if it is the same date as the employee's death, there is no authority to ship HHG if the death is at a CONUS PDS.

F. CARRIER FAILURE/BANKRUPTCY PROCEDURES

1. HQ MTMC will establish internal procedures in order to take action to protect the US Government and the property belonging to DOD Component's members/employees in all carrier failure and bankruptcies. These procedures must include a process to ensure that the DOD Component's claims services and finance centers receive prompt notice of any bankruptcy filing.

2. Action Taken by TOs.

a. Identify/locate all shipments frustrated in their AOR (i.e., origin, en route, destination).

b. Provide MTMC/MTPP-H with a list of all shipments that have not arrived at destination.

c. Comply with MTMC instructions to effect onward movement and issue all documentation necessary to complete movement of shipments frustrated in their AOR (to include those shipments at origin or destination port agent facilities ready for onward movement).

d. International shipments frustrated at commercial ports due to nonpayment of charges will be moved using HQ MTMC OTOs. The OTO issuing activity will designate TOs issuing the documentation for the onward movement.

e. Upon issuance of documentation, provide HQ MTMC/MTPP copies of all documentation to support the movement.

f. TOs, upon notification from HQ MTMC to terminate shipments of bankrupt carrier, must immediately attempt to locate all shipments within their AOR.

(1) Shipments Still at Origin.

(a) Shipments that have been booked, but a PPGBL has not been issued, must be rebooked with another carrier.

(b) Shipments that have been booked, a PPGBL issued, but no origin services have been performed, must be pulled back and rebooked with another carrier. Cancel the original PPGBL and issue a new PPGBL. Advise member/employee of the change in carrier.

(c) PPGBL issued, shipment picked up and at the origin agent's facility should be pulled back and rebooked with another carrier represented by the same agent. The new carrier will not be charged tonnage. State in the remarks block of the PPGBL the rationale for cancellation and cross reference PPGBLs.

(2) Shipments at Destination.

(a) Shipments at the Destination Agent's Facility. Terminate at the destination by issuing a SF 1200, Government Bill of Lading Correction Notice (Figure 410-2), effective the date shipment was received by the destination agent. State in the remarks section, "PPGBL terminated at destination agent due to the (i.e., non-use, disqualification, etc.) of (carrier name)." For ITGBL shipments moving under SFRs that include unpacking, show SFR reduction for nonperformance of unpacking, i.e., "ITGBL Rate Solicitation number (state number) applies ($_____) per (net or gross) cwt reduction to SFR. HHG containers which are the property of (carrier name) will be made available to the (carrier name) agent upon delivery of the shipment." Use the DPM contractor for all further services or pay the destination agent for services performed as follows:

1 Army, Air Force, Navy, and Coast Guard: Pay the destination agent on a local purchase order or blanket purchase agreement.

2 Marine Corps: The destination agent should submit an invoice for services performed to the destination TO for certification and then forward the invoice to the Commanding General, Marine Corps Logistics Base (Code 470), Albany GA 31704, for payment with a copy of the DD Form 1299, Orders; DD Form 619, GBL Correction Notice; and terminated PPGBL.

(b) Shipments Held by a Linehaul/Flatbed/Motor Freight Carrier at Destination for Payment of Linehaul Charges.

1 The destination TO must terminate the original PPGBL at the point where the delivering linehaul carrier picked up the shipment, i.e., destination port, by issuing a SF 1200. State in the remarks section, "PPGBL terminated at (state point where shipment was terminated) due to the (i.e., non-use, disqualification, etc.) of (carrier name)." "(Carrier name) can bill for services performed to (state point where shipment was terminated)." Issue a new PPGBL to the linehaul carrier that moved the shipment to destination showing the origin (Block

19) as the point where the linehaul carrier picked up the shipment, and Consignee (Block 18) as the DPM contractor at destination. In the Remarks Section (Block 25) of the new PPGBL, annotate the following: "Onward movement of frustrated shipment due to (i.e., non-use, disqualification, etc.) of (carrier name)," and "HHG containers which are the property of (carrier name) will be made available to (carrier name) agent at destination upon delivery of the shipment." Cross-reference the old and new PPGBLs and carrier names on both the SF 1200 and the new PPGBL.

g. Intermediate Locations.

(1) Shipments On Hand at Intermediate Locations. The TO responsible for the area where the property is located (to include shipments at origin or destination port or port agent facilities) must terminate the shipment by issuing a SF 1200, to be effective the date shipment was received. State in the remarks section, "PPGBL terminated at (state point where shipment was terminated) due to the (reason for termination, i.e., non-use, disqualification, etc.) of (carrier name)." "(Carrier name) can bill for services performed to (termination point)." Issue a new PPGBL for onward movement using the following instructions.

(a) Shipments at the Destination Port or Destination Port Agent. Tender the shipment as either a DPM shipment or a Code 2 shipment. Issue a new PPGBL to the new carrier to the final destination showing origin (Block 19) as the point where the shipment is located. Cross-reference the old and the new PPGBL and carrier names on both the GBL correction notice and the new PPGBL. State in the Remarks Section (Block 25) of the new PPGBL, "Onward movement of frustrated shipment due to (i.e., non-use, disqualification, etc.) of (carrier name)," and "HHG containers which are the property of (carrier name) will be made available to (carrier name) agent at destination upon delivery of the shipment." If the shipment is moved as a Code 2 shipment, state in the Remarks Section (Block 25), "No packing services performed. Carrier can bill for linehaul and services certified by TO." The Code 2 carrier must obtain new weight tickets. If the shipment is being held by the port agent for payment of port services, arrange for payment to the port agent by a local purchase order or if moving via Code 2, a DD Form 619. For overseas PCS shipments, the above information will be entered on the freight warrant or other document issued to complete movement to destination.

(b) Shipments at the Origin Port or Origin Port Agent. Tender the shipment to a new ITGBL carrier with cost favorable rates from the termination point. In the Remarks Section (Block 25) show the SFR reduction for non-performance of packing, i.e., "ITGBL Rate Solicitation number (state number) applies. ($_____) per (net or gross) cwt reduction to SFR." The new carrier must obtain new weight tickets. State in Remarks Section (Block 25) of the new PPGBL, "Onward movement of frustrated shipment due to (i.e., non-use, disqualification, etc.,) of (carrier name)," and "HHG containers which are the property of (carrier name) will be made available to (carrier name) agent at destination upon delivery of the shipment." Cross-reference the old and the new PPGBL and carrier names on both the SF 1200 and the new PPGBL.

(2) Shipments Held by Linehaul/Flatbed/Motor Freight Carriers at Origin Port for Payment of Linehaul Charges.

(a) The TO/port/VPC receiving information that a shipment is being held at the port must notify the origin TO who must terminate the original PPGBL at the origin agent's warehouse by issuing a SF 1200. State in the Remarks Section "PPGBL terminated at (name of origin agent) due to (i.e., non-use, disqualification, etc.) of (carrier name)." "(Carrier name) can bill for origin services only in accordance with item (item number) of ITGBL Rate Solicitation number (numbers)."

(b) The origin TO must issue a new PPGBL to a new carrier from the origin agent's warehouse to the final destination. Advise the new carrier that the shipment is being held by linehaul/flatbed/motor freight carrier at the origin port (identify specific location) and the new carrier will be required to pay the carrier holding the shipment for the linehaul charges to the port and arrange for onward movement to the final destination. PPGBL Remarks Section (Block 25) should show SFR reduction for non-performance of packing, i.e., "ITGBL Rate Solicitation number (state number) applies. ($_____) per (net or gross) cwt reduction to SFR." Also state in the Remarks Section, "HHG containers which are the property of (carrier name) will be made available to (carrier name) agent at destination upon delivery of the shipment," and "Onward movement of frustrated shipment due to (i.e., non-use, disqualification, etc.) of (carrier name)." Cross-reference the old and the new PPGBLs and carrier names on both the SF 1200 and the new PPGBL. The new carrier must obtain new weight tickets.

(c) Domestic Shipments Abandoned/Frustrated at a Point En Route to Final Destination. The TO responsible for the area where the shipment is frustrated must terminate the original PPGBL at the point where the shipment is located by issuing a SF 1200. State in the Remarks Section (Block 25), "PPGBL terminated at (termination location) due to (reason for termination) of (carrier name)." "(Carrier name) can bill for services to (shipment location)." Issue a new PPGBL to a new carrier for movement to the final destination showing the origin as the point where shipment is presently located and state in the Remarks Section (Block 25), "Onward movement of frustrated shipment due to (i.e., non-use, disqualification, etc.) of (carrier name)." For Code 2 (containerized) shipments, state in Remarks Section (Block 25), "HHG containers which are the property of (carrier name) will be made available to (carrier name) agent at destination upon delivery of the shipment," and "No packing services performed. Carrier can bill for linehaul and services certified by TO." Cross-reference the old and the new PPGBLs and carrier names on both the SF 1200 and new PPGBL. The carrier must obtain new weight tickets.

(3) Domestic Shipments Moving by an Alternate Carrier for (Carrier Name) That Become Frustrated En Route. The TO receiving information that a shipment is being held must notify the origin TO who must cancel the original PPGBL at origin by issuing a SF 1200. State in Remarks Section (Block 25) "PPGBL canceled due to (i.e., non-use, disqualification, etc.) of (carrier name)." Issue a new PPGBL to the alternate carrier from origin to final destination. Cross-reference the old and the new PPGBLs on both the SF 1200 and the new PPGBL. If the alternate carrier does not have rates on file, move under the carrier's commercial tariff. The new carrier must obtain new weight tickets.

(4) Domestic Shipments Moving by an Interline Carrier That Become Frustrated En Route. The TO responsible for the area where the shipment is frustrated must terminate the original PPGBL at the point where the interline carrier received the shipment by issuing a SF

1200. State in Remarks Section (Block 25), "PPGBL terminated at (show point where shipment was interlined) due to the (i.e., non-use, disqualification, etc.) of (carrier name)." "(Carrier name) can bill for services to (show point where shipment was interlined)." Issue a new PPGBL to the interline carrier showing the origin as the point where the shipment was interlined. State in the Remarks Section (Block 25), "Onward movement of frustrated shipment due to (i.e., non-use, disqualification, etc.) of (carrier name)." For Code 2 (containerized) shipments, state in the Remarks Section (Block 25), "HHG containers which are the property of (carrier name) will be made available to (carrier name) agent at destination upon delivery of the shipment," and "No packing services performed. Carrier can bill for linehaul and services certified by TO." Cross-reference the old and the new PPGBLs and the carrier names on both the SF 1200 and the new PPGBL. If interline carrier does not have rates on file, move under the interline carrier's commercial tariff. The new carrier must obtain new weight tickets.

(5) Domestic mobile home or boat tow-away shipments will be handled IAW the "Termination of Service" item in the Mobile Home Solicitation.

h. Shipments Detained by Ocean Carriers for Nonpayment of Ocean Charges.

(1) Unless otherwise directed by HQ MTMC/MTPP, the MTMC designated representatives must ascertain those shipments being held at the ports in their AOR for nonpayment of ocean charges and must notify HQ MTMC/MTPP-HR to solicit OTO rates. Coordination with HQ MTMC/MTPP-HR may be necessary to determine whether port solicitations or individual shipment OTOs are required. Requests for individual OTOs must include the member's/employee's name/rank or grade/SSAN, code of service, PPGBL, RDD, origin port, present location of shipment, pieces/weight/cube, ocean carrier/vessel/voyage number, ocean bill of lading number, container number, final destination, and responsible destination TO.

(2) HQ MTMC/MTPP-HR must solicit competitive OTO rates by individual ports or, where volume is limited, by individual shipment rather than by port. Carriers that bid must be required to pay the ocean charges and all other charges that may have accrued (i.e., demurrage, storage, port handling, drayage, etc.) and complete movement to final destination.

(3) When the OTO bids have been processed, HQ MTMC/MTPP-HR will provide the destination TOs and MTMC designated representatives, by message, the names of the carriers selected to move the shipments. If the solicitation is by port, the primary and secondary carriers selected to service each port, their OTO tender number, and the rate information will be provided.

(4) Each destination TO that has shipments in this category is responsible for issuing all documentation for shipments destined to their activity. If the solicitation is by port, the MTMC designated representative must provide the responsible destination TOs a list of all shipments being held at the various ports that are destined to their activity. The list must include the member's/employee's name, PPGBL number, origin port, and present location of shipment. Upon receipt of this information, each destination TO will be responsible for issuing the following documents to complete movement of these shipments.

(a) Issue a SF 1200 to terminate the original PPGBL at the origin port. State in the Remarks Section (Block 25) "PPGBL terminated at (name of origin port) due to the (i.e., non-use, disqualification, etc.) of (carrier name)." "(Carrier name) can bill for services to the origin port only in accordance with items (item numbers) of ITGBL Rate Solicitation number (number)."

(b) Issue a new PPGBL to the OTO carrier. Cross-reference the old and the new PPGBLs and the carrier names on both the SF 1200 and new PPGBL. In Block 19 of the new PPGBL show the name of the origin port where the original PPGBL was terminated and state in the Remarks Section (Block 25) the current location of the shipment (i.e., Port of Baltimore). In "Consignee" (Block 18) show the final destination of the shipment. State in "Remarks" Section, (Block 25) "HHG containers which are the property of (carrier name) will be made available to (carrier name) agent upon delivery of shipment" and "Onward movement of frustrated shipment due to (i.e., non-use, disqualification, etc.) of (carrier name). All ocean charges, including storage and drayage, will be paid by Finance on a submission of a paid invoice." In "Tariff or Special Rate Authorities" Section (Block 31) show the OTO tender number and OTO rate. If the solicitation is by port, show the OTO tender number and statement "See Remarks Block." In Remarks Section (Block 25), show the rate information provided by HQ MTMC (MTPP-HS). The OTO carrier must obtain new weight tickets. For a pickup date, use the date the PPGBL was issued. Establish the RDD based on the pickup date, plus 5 days.

i. Recovery of Excess Funds Expended by the DOD to Complete Movement.

(1) All TOs, immediately upon completion of retendering of all frustrated shipments detailed in Paragraphs F.2.f. through F.2.h. above, must forward a list of all shipments retendered by their activity to HQ MTMC/MTPP-HQ. The following information must be included in the lists.

(a) Member's/employee's last name, first name, MI.

(b) Rank or Grade.

(c) SSAN.

(d) Branch of Service/Agency.

(e) Original PPGBL number.

(f) Name of new carrier.

(g) New carrier PPGBL number.

(h) Paying finance office.

NOTE: If a purchase order or freight warrant was issued to cover payment of services performed, indicate this and provide a copy of the paid bill to HQ MTMC/MTPP-HQ.

(2) HQ MTMC will consolidate all data for their use in the audit of these shipments for recovery of excess funds expended by the DOD to complete movement of the shipments.

(3) HQ MTMC will provide the results of the recovery actions to the military Services involved.

G. EMERGENCIES INVOLVING SHIPMENTS IN NTS (CONUS)

1. Purpose and Scope. This Paragraph prescribes procedures and provides guidance for the notification to the Commander, MTMC, of any incident at a commercial storage facility that affects, or is likely to affect, the storage of personal property. It applies to any incident (such as flood, fire, and unlawful entry) that causes, or is likely to cause, loss or damage to stored personal property. It also applies to bankruptcy proceedings or any adverse actions against or by a contractor that will impede or prevent the removal of goods from storage or result in loss or damage to stored personal property.

2. Actions to Be Taken by Ordering Officers.

a. Upon becoming aware of an incident or situation that is causing, or is likely to cause, loss, damage, or frustration of personal property shipments in NTS, the ordering officer must immediately notify the responsible MTMC RSMO contracting officer. Incidents or situations to be reported include, but are not limited to, the following:

(1) Natural disasters (such as floods, fires, and storms).

(2) Unlawful entries.

(3) Strikes, work stoppages, or embargoes.

(4) The seizure of a contractor's facility for failure to pay just debts.

(5) Closure of a contractor facility in compliance with a court order.

(6) Action on the part of the contractor or the contractor's creditors to file a bankruptcy petition.

(7) Failure on the part of the contractor to fulfill all the terms and conditions of the BOA for storage of HHG and related services (Appendix J).

b. Notification To Be Furnished to USTRANSCOM and DOD Components. To inform the DOD of unusual circumstances that may result in the filing of a large number of claims for loss or damage to stored personal property shipments, the Commander, MTMC, must provide each DOD component claims office a copy of the RSMO contracting officer's final report.

GOVERNMENT INSPECTION REPORT	1. PREPARING INSTALLATION

2. NAME OF PROPERTY OWNER	3. DESTINATION ADDRESS *(Street, City, State and ZIP Code)*
4. MODE OF SHIPMENT	

5. PROPERTY SHIPPED		6. DATE OF DELIVERY TO OWNER *(YYYYMMDD)*	
a. FROM *(Include ZIP Code)*	b. TO *(Include ZIP Code)*	c. WEIGHT OF SHIPMENT	d. NUMBER OF PIECES

e. NAME AND ADDRESS OF GOVERNMENT BILL OF LADING CARRIER *(Include ZIP Code)*	f. GBL NUMBER
	g. AIRWAY BILL NUMBER
	h. CARRIER'S BILL OF LADING NUMBER
i. NAME AND ADDRESS OF WAREHOUSE *(If shipment from nontemporary storage) (Include ZIP Code)*	j. LOT NUMBER
	k. SERVICE ORDER NUMBER
l. NAME AND ADDRESS OF DELIVERING CARRIER *(If not agent of Government Bill of Lading carrier) (Include ZIP Code)*	m. CONTRACT NUMBER

7. DISCREPANCIES NOTED BY INSPECTOR *(Use supplemental sheets if necessary)*

CARRIER'S INVENTORY NUMBER *(Carton No. if packed item)* a.	ARTICLE b.	DESCRIBE LOCATION, NATURE AND EXTENT OF NEW DAMAGE AND APPARENT CAUSE OF DAMAGE *(State "MISSING" if applicable)* c.	WEIGHT *(Lbs)* OF ARTICLE OR CARTON IF PACKED ITEM d.

DD FORM 1841, SEP 1998 (EG) PREVIOUS EDITION IS OBSOLETE.

Figure 410-1. DD Form 1841, Government Inspection Report

8. INVENTORY NUMBERS OF CARTONS OR CONTAINERS WITH VISIBLE EXTERNAL DAMAGE *(Describe damage to each and apparent cause of damage)*			
9. PACKING VIOLATIONS NOTED *(Describe in detail) (See MIL-STD-212c)*			
10. CERTIFICATE OF INSPECTOR I personally made the above inspection on the date shown and certify that the conditions as shown on this report of _____ pages accurately reflect the loss and/or damage incurred during shipment and/or storage.			
a. DATE OF INSPECTION *(YYYYMMDD)*	b. TYPED NAME OF INSPECTOR *(Last, First, Middle Initial)*	c. GRADE	d. SIGNATURE
11. CERTIFICATE OF PROPERTY OWNER I have examined this report of _____ pages and the conditions shown accurately and completely set forth the entire loss and/or damage to my property incurred during shipment and/or storage.			
a. DATE *(YYYYMMDD)*	b. SIGNATURE		
12. CERTIFICATE OF TRANSPORTATION OFFICER I certify that the information on this report of _____ pages is accurate and complete to the best of my knowledge.			
13. "NOTICE OF LOSS OR DAMAGE" DISPATCHED			
a. DATE *(YYYYMMDD)*	b. ADDRESSEE		
c. DATE *(YYYYMMDD)*	d. ADDRESSEE		
e. DATE OF REPORT *(YYYYMMDD)*	f. TYPED NAME OF INSTALLATION TRANSPORTATION OFFICER *(Last, First, Middle Initial)*	g. SIGNATURE	

DD FORM 1841 (BACK), SEP 1998

Figure 410-1. DD Form 1841 (Back), Government Inspection Report (Cont'd)

GOVERNMENT BILL OF LADING CORRECTION NOTICE

DATE NOTICE PREPARED

1. GBL NUMBER

2. DATE GBL WAS ISSUED: 27-JUL-00

3. TOTAL WEIGHT SHOWN ON GBL: 4440

4. ORIGIN (As shown in "Origin" block on GBL)

5. DESTINATION (As shown in "Destination" block on GBL): HANAU GERMANY APO 09165

6. ROUTE (Complete routing shown on GBL)

7. ISSUING OFFICE (As shown on GBL under "For Use of Issuing Office.") SCOTT AFB

8. TO: (Name and address of carrier/activity to which directed, including ZIP Code.)

AMERICAN WORLD FWDS INC
400 E RED BRIDGE ROAD SUITE 312
KANSAS CITY MO 641314000

9. Complete Items 9a, b, and c only when correction is made after transportation charges have been paid.

a. D.O. VOUCHER NUMBER

b. D.O. VOUCHER DATE

c. D.O. SYMBOL

10. FROM: (Full name and address of the activity initiating the notice, including ZIP code.)

Name: SCOTT AFB
Street: TRAFFIC MANAGEMENT OFFICE
City: SCOTT AFB State: IL Zip: 62225-5010

11. BILL OF LADING NOW READS (Show the information as it reads prior to correction.)

1 RUTS MOVING/DELIVERY SERVICE, INC.

12. CORRECT BILL OF LADING TO READ (Show how the corrected information should read.)

1 HUTCHCRAFT VAN SERVICES, INC.

13. AUTHORITY FOR CORRECTION (Tariff and item numbers; classification and item number; or other authority for making the change.)

TMO

14. REMARKS (Pertinent information not otherwise provided on the form. If more space is required, use reverse side of this form.)

15. INFORMATION COPY TO (Name and address, including ZIP Code.)

DEST TMO: WKAS
CARRIER
FINANCE
AGENT: HUTCHCRAFT VAN SERVICES, INC.
FILE
APOE TIK/DOV

16. SIGNATURE AND TITLE OF INITIATING OFFICIAL

TRAFFIC MANAGEMENT OFFICER

17. CARRIER REPRESENTATIVE'S SIGNATURE (Require when notice is initiated by shipper and transportation charges are affected.)

NSN 7540-01-140-5524 *U.S. GPO: 1986-155-004 1200-101

STANDARD FORM 1200 (8-82)
Prescribed by GSA, FBMR (41 CFR) 101-41.3

Figure 410-2. SF Form 1200, Government Bill of Lading Correction Notice

THIS PAGE INTENTIONALLY LEFT BLANK

CHAPTER 411

PERSONALLY PROCURED TRANSPORTATION

For DOD personally procured moves see the JFTR, par. U5320-D, Personally-Procured Transportation and NTS for military member entitlements and the JTR Volume 2, Chapter 8, Part C, Section 1, Methods for civilian employee entitlements and DOD Component publications for policies and procedures.

THIS PAGE INTENTIONALLY LEFT BLANK

CHAPTER 412

BOATS

A. GENERAL

1. This Chapter applies to the movement of privately owned boats, property of members/employees. See the JFTR, par. U5310-F, Excess Costs for Transportation of Boats as HHG for computation of excess costs when boats are included in HHG. For the movement of boats used as a primary residence, see the JFTR, par. U5500, General, the JTR, par. C10000, Privately Owned Mobile Homes, and the procedures in Chapter 407 of this Regulation. In addition to the above information, the following procedures apply:

a. Domestic: Boats 14 feet or less without trailer (members/employees).

(1) Boats that can be transported in a moving van, e.g., canoe, kayak, rowboat, outboard/inboard motorboat, 14 feet or less without a trailer may be shipped with HHG.

(2) Shipments weighing less than 500 lbs that include small boats, such as canoes, kayaks or sculls must be shipped by the DPM.

b. Domestic: Boats 14 feet or less with trailer (members/employees). Boats 14 feet or less with trailer may be shipped separately under the domestic OTO rate negotiated by HQ MTMC, personally procured transportation, or shipped with HHG.

c. Domestic (Members only): Boats 14 feet or over with or without trailer. Boats 14 feet and over with or without a trailer must be shipped separately under the domestic OTO rate negotiated by HQ MTMC or personally procured transportation. NOTE: Employees are limited to domestic shipment of boats 14 feet or less with or without trailer.

d. International (members/employees): Small boats such as canoes, kayaks or rowboats must be moved with HHG; Item 508, International Personal Property Rate Solicitation must be used for crating.

2. OTO Mobile Home/Boat Rate Solicitation. HQ MTMC/MTPP-HR will issue the solicitation and distribute it to all TOs involved in counseling and movement of personal property. Refer to the rate solicitation for all carrier responsibilities and procedures.

3. If the member/employee elects to move a boat via the personally procured transportation method, the member/employee must receive counseling and authorization from the TO. (See Chapter 411.)

4. For Boats, Other Than Those Shipped With Personal Property. If the member/employee elects to personally procure transportation of the boat, all arrangements must be made by the member/employee and may be reimbursed. In determining reimbursement, see the JTR, par C8210B, Employee-Arranged Move, JFTR, par. U5310, Basic Entitlement, and DOD Component publications.

5. Employees may ship boats (14 feet or less) and those used as a primary residence and defined as mobile homes in the JTR, Appendix A, Definitions.

B. COUNSELING

1. Application for Shipment of Boat. The counseling office must prepare DD Form 1299 (Figure 401-1) supported by the member's/employee's orders. If the counseling office is not the origin TO, the DD Form 1299 with supporting documents must be forwarded to the responsible TO.

2. The counseling office must stress the following information in addition to the counseling checklist for domestic boat shipments:

a. The member/employee must insure the boat and motor are securely fastened/strapped to the trailer. The trailer must have a valid license. If the origin state does not require the trailer to be licensed, the member/employee must be informed of being responsible for the cost of a transit permit to be provided by the tow-away carrier. The following stipulations must also be met:

(1) The trailer must have working lights, wiring, and brakes (if so equipped).

(2) The trailer must be equipped with good tires and hubs that have been checked for adequate lubrication and good bearings.

(3) The trailer frame cannot be bent, twisted, or broken.

(4) The member/employee must ensure the boat is prepared for shipment in order to avoid additional charges.

b. When a commercial boat hauler is used, the boat must be picked up at a marina and delivered to a marina where a crane can be utilized to load and off-load the boat. Arrangements and cost for the marina crane at origin and destination are the responsibilities of the member/employee.

c. Boats cannot be over 13 feet high from the keel to the highest point on the bridge. Members/employees are also responsible for dismantling bridges, spars, and masts to meet dimension requirements.

d. Articles not part of the structure must be removed, i.e., clothing, electronic gear, televisions, skis, etc. Refer to the Mobile Home/Boat Rate Solicitation.

e. Advise the member/employee of projected excess costs, including weight additive for shipping and storage.

3. When a boat is moved under the international program and the member/employee is also shipping HHG to the same destination, the boat and HHG must be combined into one shipment and moved under the International Boat OTO program.

4. When requesting a domestic boat shipment, the TO must submit any requirement for SIT and the estimated total time the shipment is to remain in storage. SIT must be included as a determining factor in selecting the best value carrier.

C. RATES

1. OTO rates for the movement of boats are obtained through competitive solicitation using the Mobile Home/Boat One-Time-Only (BOTO) Program, the International Rate Solicitation (IRS), and other methods as may be determined by HQ MTMC/MTPP-HR or designated representative.

2. The following guidance pertains to BOTO:

a. The TO responsible for shipping the boat must provide HQ MTMC or their designated representative the complete information contained in the BOTO Request Format, Figure 412-1 for domestic shipments and Figure 412-2 for international shipments.

b. BOTO requests must be made as soon as possible, but not less than 10 days (domestic) or 30 days (international) prior to the pickup date. Every effort must be made to meet the needs of the member/employee.

c. Shipments must be tendered to the carrier prior to the tender expiration date. A tender is valid for 30 days and can be extended. In the event that conditions prevent pickup, HQ MTMC must be notified by the TO so action can be taken.

d. The TO must notify the carrier immediately and notify HQ MTMC on all BOTO movement cancellations. If cancellations are made less than 48 hours prior to pickup (time begins at 0800 Eastern Standard/Daylight Savings Time on the date of pickup), the carrier may bill for services ordered, but not used.

D. CARRIER OR AGENT FACILITIES

1. Location. DOD-approved boat carriers are not required to have an agent or carrier-operated facility within the AOR of an installation to be qualified to participate in boat traffic.

2. Requirements. If approved by the TO, a carrier may designate any DOD-approved storage facility to serve as its agent.

E. SHIPMENT PROCEDURES

1. When a boat is not ready for pickup on the agreed date, the TO must notify the carrier of the delay at least 48 hours prior to the date of pickup. A new pickup date must be established based upon the estimated date the boat will be ready for movement, the member's/employee's requirements, and the carrier's capability. Shipments must be tendered to the carrier prior to the expiration date (30 days from original solicitation pickup date).

2. Joint Statement of Loss or Damage at Delivery, DD Form 1840/1840R (Figures 401-4 and 401-5) must be used to record all loss or damage.

3. Carrier Refusal of Shipment Due to Boat Trailer Not Being Road-Worthy. If the carrier's inspection or a Government inspector reveals a deficiency and renders the boat trailer unsafe or unlawful for transportation, the origin TO must be notified and must instruct the member/employee to have the deficiency corrected. If correction is not possible before or on the agreed date of pickup, the TO must terminate the PPGBL. The member/employee is liable for all attempted pickup charges, when not the fault of the carrier. Under no circumstance may the TO release the boat for shipment until it is considered by both the carrier and the TO to be safe and practicable to move.

4. Termination of Boat Shipment. A shipment must be terminated when ordered by HQ MTMC or a TO. Termination of service is normally used in cases of violation of federal, state, or local laws; violation of TOS; improper performance of service; or cancellation of the member's/employee's orders. The following applies:

a. Any charges for authorized services performed to point of termination must be paid IAW the submitted rate tender and/or a negotiated rate obtained by HQ MTMC.

b. If the shipment was delivered to or from SIT, then any SIT charges must be paid when required and authorized by the TO.

c. A termination of service that requires the transfer of a boat from one carrier to another must be coordinated with HQ MTMC for a negotiated rate. The carriers involved in the transfer must each verify exceptions to the boat at time of transfer. The TO must issue a new PPGBL to the new carrier that cross-references the PPGBL of the terminated carrier.

d. When the carrier receives an order for termination, the carrier must locate the shipment, advise the TO or HQ MTMC of the location of the shipment, and effect the required change in a documented manner. The TO must issue a PPGBL Correction Notice to show the termination point and correct the rate.

F. <u>SIT</u>

1. The following applies only to tow-away boats that are not water-to-water movements.

a. Onward movement or delivery to a residence must be effected only at the request of the TO. The origin TO assigns a SIT control number at the origin or en route and arranges with the carrier for release for delivery to final destination. The destination TO assigns the SIT control number for SIT at destination and arranges for delivery and any required destination services.

b. When a boat is hauled using the tow-away method, it basically follows mobile home procedures for SIT. SIT can be either in a DOD-approved mobile home SIT facility or a DOD-approved HHG SIT warehouse.

c. The single factor rate includes delivery to destination, even after it has been placed in SIT at a HHG carrier's warehouse. Therefore, the tow-away boat carrier that placed the shipment in SIT must be contacted to move the shipment to destination, unless the

member/employee elects to hook up to the boat and tow it to destination. Personally procured transportation procedures do not apply.

d. SIT involving boats may use the same storage facilities as mobile homes. TOs are requested to check the PPCIG, Volume I, for storage facilities.

2. For the procedures concerning SIT of boats, see Chapter 407 of this Regulation.

G. NTS

1. For determining the entitlement of NTS for boats, see the JFTR, par. U5380, Non-Temporary Storage and DOD Component publications.

2. If a boat is accepted by a NTS contractor, the member/employee is responsible for preparing for storage (clean, fuel purged, winterized, etc.).

3. When the TO is unable to make arrangements, the member/employee may elect to arrange for storage at the member's/employee's expense. The member/employee can file a claim for reimbursement after withdrawal. Reimbursement will be IAW the JFTR, par. U5320-D.

4. The member/employee may elect to include a boat with NTS of HHG. The NTS contractor must accept the boat if it is 14 feet or less without a trailer. If boat is 14 feet or over or has a trailer, the NTS contractor is not obligated to accept. Boats must be stored inside the approved warehouse. Outside storage of boats is not authorized.

H. SHIPMENT OF BOATS TO ALASKA

1. Consignment Instructions. Shipments of boats from CONUS to Alaska must be consigned IAW the PPCIG and moved under the international OTO method.

2. Shipments Within Alaska. Intrastate boat shipments in Alaska are governed by the CONUS movements procedures and IAW specific state regulatory agencies.

I. QUALITY CONTROL INSPECTIONS

The TO will inspect as many boat shipments as possible originating and terminating within the TO's AOR.

J. CARRIER PERFORMANCE

1. Carrier Performance Files. Each origin TO must establish a carrier performance file for each boat carrier qualified to serve the installation's AOR. The file must contain all pertinent data relating to the carrier's performance.

2. Unsatisfactory Performance. When a carrier or carrier's agent violates any provision of the TOS, rules, publications of applicable rate tariffs/tenders, legal requirements, or commits unethical acts, the TO must take action. As a minimum, the TO must report any violations and/or unsatisfactory service rendered by BOTO carriers to HQ MTMC/MTPP-HR.

BOTO MESSAGE REQUEST FORMAT

FROM: (PPSO)

TO: CDRMTMC ALEXANDRIA VA//MTPP-HR//

UNCLAS

SUBJECT: REQUEST FOR ONE-TIME-ONLY -- DOMESTIC BOAT RATE

1. MEMBER'S/EMPLOYEE'S NAME/RANK OR GRADE/SSN/SERVICE.

2. PICKUP POINT. TOW-AWAY INCLUDE COMPLETE ADDRESS, COUNTY/PARISH, CITY, STATE, AND ZIP CODE. IF COMMERCIAL HAULER GIVE ADDRESS AND PHONE NUMBER OF LIFT SITE, SUCH AS A MARINA.

3. DESTINATION POINT. TOW-AWAY INCLUDE COMPLETE ADDRESS, COUNTY/PARISH, CITY, AND STATE. IF COMMERCIAL HAULER GIVE ADDRESS AND PHONE NUMBER OF LIFT SITE, SUCH AS A MARINA.

4. PICKUP DATE.

5. REQUIRED DELIVERY DATE (DESIRED DELIVERY DATE IF UTILIZING COMMERCIAL METHOD).

6. STATE IF: TOW-AWAY, OR COMMERCIAL BOAT HAULER.

7. REQUIREMENT AND LOCATION FOR SIT (FOR TOW-AWAY ONLY).

8. SIZE OF BOAT (LENGTH, WIDTH, HEIGHT). YEAR, MAKE, MODEL, MANUFACTURER'S WEIGHT, TYPE OF BOAT (MOTOR, SKI, SAIL, FISHING, YACHT, ETC). ALSO STATE IF BOAT HAS ANYTHING OUT OF THE ORDINARY THAT A CARRIER NEEDS TO KNOW FOR TRANSPORTING.

9. SIZE OF TRAILER (LENGTH, WIDTH, HEIGHT). YEAR, LICENSE INFORMATION (NUMBER, STATE, EXPIRATION DATE).

10. IS TRAILER ROADWORTHY?

11. ORIGIN BLOC.

12. DESTINATION BLOC.

13. TRANSPORTATION OFFICE POC (INCLUDE NAME, DSN, AND COMMERCIAL PHONE NUMBERS).

14. ADDITIONAL REMARKS.

Figure 412-1. BOTO Message Request Format

INTERNATIONAL BOAT RATE REQUEST

FROM: PPSO

TO: CDRMTMC ALEXANDRIA VA//MTPP-HR//

SUBJ: REQUEST FOR PERSONAL PROPERTY ONE-TIME-ONLY (OTO) WITH BOAT RATE

1. MEMBER'S/EMPLOYEE'S NAME/RANK/SSN.

2. CODE OF SERVICE.

3. ORIGIN PPSO: INCLUDING BLOC AND PICKUP POINT OF SHIPMENT IF OTHER THAN INSTALLATION (HHG AND BOAT).

4. DESTINATION CITY, INSTALLATION, BLOC, STATE/COUNTRY.

5. PICKUP DATE.

6. REQUIRED DELIVERY DATE.

7. ESTIMATED WEIGHT IN NET POUNDS FOR HHG.

8. ESTIMATED WEIGHT IN NET POUNDS FOR BOAT. BOAT REQUESTS MUST INCLUDE THE FOLLOWING: BOAT-LENGTH, WIDTH, HEIGHT, MOTOR-MAKE, SERIAL NUMBER, WEIGHT, WHETHER INBOARD OR OUTBOARD.

NOTE: WHEN BOAT IS MOVING WITH TRAILER, COMBINED DIMENSIONS ARE REQUIRED.

9. DATE BOAT OTO INFORMATION IS REQUIRED FOR BOOKING PURPOSES.

10. LIST CARRIERS IN NONUSE.

11. POINT OF CONTACT/TELEPHONE NUMBER.

Figure 412-2. International BOTO Rate Request Format

THIS PAGE INTENTIONALLY LEFT BLANK

CHAPTER 413

US GOVERNMENT BILL OF LADING--PRIVATELY-OWNED PERSONAL PROPERTY (PPGBL) (SF 1203) AND US GOVERNMENT BILL OF LADING CORRECTION NOTICE (SF 1200)

A. GENERAL

This Chapter establishes procedures and provides guidance for the accountability, use, issuance, preparation, and distribution of the PPGBL (See Figure 413-1). The PPGBL will be used for the acquisition of authorized transportation and related services from commercial carriers for the movement of DOD-sponsored personal property shipments, mobile homes, and POVs eligible for movement on a PPGBL. (This Chapter does not apply to personally procured movements.)

B. RESPONSIBILITIES

1. HQ MTMC is responsible for prescribing administrative procedures regarding the use of PPGBLs for the procurement of commercial transportation services on behalf of the DOD.

2. The Administrator, GSA, is responsible for prescribing procedures governing the use of PPGBLs throughout the US Government. GSA has published the regulations and procedures governing the procurement of, and the billing and payment for, transportation services for the account of the US in 41 CFR 101-41.3, Freight Transportation Services Furnished for the Account of the United States.

C. PROCEDURES

1. Supply. At locations that cannot create computer generated PPGBLs, requisitions must be submitted through normal DOD Component publications supply and distribution channels to the US Army Publications and Printing Command. TOs are responsible for maintaining an adequate supply of PPGBLs at their activity.

2. Accountability.

a. Each shipping activity must maintain records of PPGBLs issued and the supply of PPGBLs on hand. PPGBL forms are accountable, and the number of pre-printed forms that an activity may keep on hand is limited by Service/Agency policy. Internal procedures must be established to control stocks and assign accountability for PPGBL issuance and use. The TO, or in the absence of a TO, an acting TO, must be appointed in writing as the responsible PPGBL issuing officer and held accountable for PPGBL control, safekeeping, and disposition. To facilitate control, individual PPGBL sets are serially numbered when printed. The forms are issued by US Army Publications and Printing Command and numbers provided by HQ MTMC/MTPP-S. Packages of PPGBLs must be opened immediately upon receipt and inventoried by the issuing officer or designated representative to verify that none are missing. Activities must establish procedures for conduct of audits by personnel external to the office

controlling SF 1203s. Audits must be conducted at least every 180 days to verify inventories and records. TOs must provide the same level of accountability and safeguarding of PPGBL numbers maintained and issued in automated systems as they do for pre-numbered PPGBL forms. Audits conducted with automated systems must consist of a review of the PPGBL Register to ensure each PPGBL number is properly assigned to a valid shipment or recorded as void.

b. Computer-Prepared PPGBLS. TOs, having facilities for computer preparation of PPGBLs, may order them in continuous tractor feed, fan-fold format through Government distribution centers. Authorization must be obtained from HQ MTMC/MTPP-S to imprint PPGBL numbers at the time of issuance.

(1) Automated Sites. The laser generated PPGBL will be used by all automated sites for the acquisition of authorized transportation and related services from commercial carriers for the movement of DOD sponsored personal property shipments, mobile homes, and POV's eligible for movement on a PPGBL. Software will generate PPGBLs (SF 1203) and continuation sheets (SF 1109) using a laser printer and standard bond paper. HQ MTMC controls PPGBL numbers in coordination with GSA. The laser generated PPGBLs will only be accountable when a number has been assigned to the form. All information printed on the reverse of the non-laser produced PPGBL is included in the TOS, Appendix B. The first PPGBL produced (and continuation sheets) must be annotated "Original." All other copies/reprints will not contain the word, "Original."

(2) Non-Automated Sites. Blank forms must be procured using normal forms supply procedures.

c. Transfer of Forms. Blank serially numbered original PPGBLs or preassembled sets that have been issued to TOs or their designated agents may not be transferred to other TOs or their agents.

d. Disposition of Unfit or Canceled PPGBLs. When PPGBLs have become mutilated or otherwise unfit for use or have been issued and the planned shipment is subsequently canceled for any reason, all parts except the original must be destroyed. The original PPGBL must be marked "Canceled" or "Void" and must be filed in the property shipped PPGBL file. When circumstances prevent filing of the canceled or voided original document, the property shipped copy or a substitute memorandum copy with notation of disposition of the original PPGBL must be filed in the property shipped file.

e. Reporting of Lost, Stolen, Canceled, or Missing PPGBLs. The prefix symbol and serial number of blank original PPGBLs or preassembled sets that have become lost, stolen, or are unaccountably missing or otherwise beyond the control of the issuing officer must be reported to HQ MTMC/MTPP-S.

3. Issuing Officer. Only authorized or acting TOs may issue PPGBLS. Such authorized persons may be military personnel or civilian employees of the Government on duty at the issuing office. As stated in 41 CFR 101-41.302.4, accountability for PPGBLs used by a contractor-shipper remains with the issuing office. Thus, the name and title of the issuing officer

and the name and address of the issuing office, rather than those of the contractor-shipper, must appear on the PPGBL.

4. Format.

a. Computer generated PPGBLs are all marked SF 1203. In instances where computer generated PPGBLs are used, Paragraphs b and c below do not apply.

b. The PPGBL consists of five separate basic forms. For simultaneous preparation, the forms are produced in a seven-part, carbon, interleaved set (except for laser generated PPGBLs). The standard form numbers, form title, color, and distribution is described in Paragraph D below.

c. In all instances, the PPGBL original (SF 1203), shipping order (SF 1204), and the freight waybill original (SF 1205) must be given to the initial carrier or designated agent for the carrier before the shipment is packed and/or picked up. The carrier must sign and date the original PPGBL where the certification is printed "Certificate for Receipt of Shipment and Original Bill of Lading."

d. For DPM UB shipments, the PPGBL is not printed at the time of the pickup at the member's/employee's residence. The carrier does not take possession of the shipment until after the contractor has picked up and prepared the UB shipment. The PPGBL for DPM UB shipments will not be printed until the TO/PPSO has received and input the actual weight and cube from the contractor into TOPS.

D. PREPARATION OF THE PPGBL

1. The following preparation instructions are keyed to the numbered blocks appearing on the PPGBL. When different entries are required, due to different methods of shipment; i.e., TGBL, DPM, mobile home, or POV; instruction by shipment method is provided. In all other cases, the entry data provided must be the same for all methods of shipments.

a. Block 1, Transportation Company and Agent Tendered To. Enter the full business name of the initial linehaul carrier to which the shipment is tendered. The business name must include the words "company," "incorporated," or "limited". These words may be abbreviated as co., inc., and ltd. No other company or carrier abbreviation, initial, or symbol may be used. Enter the name of the carrier's booking agent or the first agent in the LOI in parentheses after the business name of the initial linehaul carrier.

b. Block 2, SCAC. Enter the four-position SCAC assigned to the initial linehaul carrier by the National Motor Freight Traffic Association.

c. Block 3, Service Code.

(1) TGBL Shipments. Enter the code of service; such as code 1, code 4, or code J.

(2) DPM Shipments. Enter the two-position DPM alpha code such as HE, BA, or BG. DPM alpha codes are defined in Appendix H.

(3) Mobile Homes. Enter the code “S”.

(4) POVs. Enter the code “C”.

d. Block 4, Shipment Number. When more than one shipment is made for an individual member/employee, the PPGBLs must be numbered in the same sequence as the DD Form 1299 (for example, 1 of 3, or 2 of 3). When only one shipment is made, enter “1 of 1”.

e. Block 5, Date B/L Issued. Enter the calendar date (day, month, and year), e.g., 4 Dec 01 on which the first entry is made in preparing the PPGBL.

f. Block 6, Requested Packing Date. Enter the calendar date (day, month, and year), e.g., 5 Dec 01 on which the carrier is to begin packing a TGBL shipment.

g. Block 7, Requested Pickup Date.

(1) TGBL. Enter the requested pickup date or the date on which the carrier has agreed to pick up the shipment, e.g., 6 Dec 01.

(2) DPM.

(a) Enter the date the shipment is picked up at the member’s/employee’s residence, NTS facility etc., in cases where such pick up is performed by a DPM packing contractor.

(b) Enter the scheduled date of pick up by the common carrier in all other cases, e.g., pick up at APOD/WPOD or TO installation facility.

h. Block 8, Required Delivery Date. Enter the RDD (day, month, and year) that the shipment is required at the destination shown in block 18, e.g., 27 Feb 02.

i. Block 9, No entry required.

j. Block 10, Property Owner’s Name, SSAN, and Rank and Pay Grade. Enter the member’s/employee’s name (last, first, middle initial), SSAN, and rank and pay grade. Also enter the member’s/employee’s status (PCS, TDY, SEP, RET) and the unit and activity to which assigned.

(1) If the member’s grade is E-4 or below, indicate the maximum authorized weight allowance per the JFTR.

(2) For Navy shipments only, enter the member’s/employee’s rank or rate code. This code is the one-digit alpha character immediately following the abbreviation and subhead in the accounting data contained in the member’s/employee’s orders.

(3) For member/employee, enter “WD” (with dependents) or “WOD” (without dependents).

(4) For deceased members/employees or deceased dependent(s) of a member/employee, annotate “Blue Bark” immediately following the name.

(5) For early return of dependents, enter dependents name, followed by “dependent of” and sponsors name, SSAN, and rank and pay grade.

k. Block 11, Authority for Shipment. Enter the authority for shipment as shown on the member’s/employee’s orders (such as order number, paragraph number, and order issuing agency).

l. Block 12, Date of Order. Enter the date the orders were issued.

m. Block 13, Extra Pickup/Delivery. When an extra pickup/delivery is requested, cross out the service not applicable and enter the complete address.

n. Block 14, Department/Agency. Enter the sponsoring military Service/Agency or other Agency.

o. Block 15, Transportation Control Number. Enter the TCN for shipments that will move in the DTS.

(1) The TCN must be constructed IAW procedures set forth in this Regulation, Part II.

(2) The 15th position of the TCN requires a code that will designate the shipment as a Code 5, J, T, or DPM shipment. For example, following is the list of current type shipment codes authorized:

B - Unaccompanied baggage (DPM)
J - Unaccompanied baggage (TGBL)--Code J
H - Household goods (DPM)
K - Household goods (TGBL)--Code 5 (for surface) and Code T (for air)
P - POV

p. Block 16, No entry required.

q. Block 17, Full Name of Shipper. Enter the full name of the military installation or activity making the shipment.

r. Block 18, Consignee. Enter Name, destination, delivery address, and rate area code, e.g., US11, US12, US13, etc. Rate area code is only required on ITGBL shipments.

(1) TGBL Shipments.

(a) Consigned to the member/employee. Enter the member’s/employee’s name (last name, first name, and middle initial), rank/grade, and activity to which assigned (shipments destined overseas--spell out the name of the activity and country--do not show APO/FPO number) or delivery address, including the street, city, county, state, or country, and ZIP code.

(b) Consigned to the member's/employee's agent. Enter the full name of the member's/employee's designated agent, followed by the word "agent", and the delivery address, including the street, city, county, state, country, and ZIP code.

(c) Consigned to a Commercial NTS Facility. Enter the full business name and address of the commercial storage contractor, including the street, city, county, state, and ZIP code.

(d) Consolidated Shipments. A separate PPGBL must be issued for each member's/employee's lot in the consolidated shipment. The individual PPGBL must be cross-referenced by inserting the following statement in block 27: "This is a consolidated shipment comprised of PPGBL numbers" (list all other PPGBL numbers involved in the consolidated shipment).

(2) DPM Shipments.

(a) DPM shipments are consigned IAW the PPCIG. For DPM shipments entering the DTS, the CONUS Water Port of Embarkation (WPOE) or APOE must be entered. The final overseas destination must appear in Block 20.

(b) For shipments to the WPOE, the desired delivery date (DDD) the shipment is required at the WPOE must be entered.

(c) For DPM shipments to the APOE, enter "RPDD; (insert date) at the APOE." The RPDD is established from the baggage pickup date by adding the origin processing time of four workdays (not including weekends and holidays) for the origin processing time, plus the LTL standard transit time (including weekends and holidays). If the RPDD falls on a weekend or a holiday, the RPDD would be assigned the next workday. For example:

DPM Shipment from Missouri to Dover, LTL standard transit time is five days.

Pickup Date: 16 May 01 (Wednesday)

Origin Agent Processing: 17 May 01 (Thursday) - 22 May 01 (Tuesday)

LTL Standard Transit Time: 23 May 01 (Wednesday) - 27 May 01 (Sunday)

RPDD Printed on PPGBL: 29 May 01 (Tuesday). This example deconflicts both a weekend and holiday of 28 May 01 (Memorial Day)

(3) Mobile Homes. Enter the member's/employee's name (last name, first name, and middle initial) (or the full name of the member's/employee's agent followed by the word "agent"), and the delivery address, including the street, city, county, state, and ZIP code.

(4) POVs. Enter the member's/employee's name (last name, first name, and middle initial) (or the full name of the member's/employee's agent followed by the word "agent"), and the delivery address, including the street, city, county, state, and ZIP code, or, if destined to a port, the ocean terminal.

s. Block 19, From. Complete address at point of pickup and rate area code, e.g., US11, US12, US13, etc. Rate area code is only required on ITGBL shipments.

(1) Shipments from Residence. Enter the exact location of the property to be shipped, including the street, city, or military installation, county, state, country, and ZIP code.

(2) Shipments from Storage or Contractor's Facility. Enter the name of the commercial or Government warehouse facility, including the street, city, county, state, country, and ZIP code. For shipments from NTS, enter the stored net weight, lot number, and service order number.

t. Block 20, Responsible Destination Installation/Office

(1) BLOC. Enter the destination TO BLOC in the designated block in Block 20.

(2) TGBL and DPM Shipments. Enter the name of the responsible destination TO, state, ZIP code, or country, APO/FPO number, and the commercial telephone number.

(3) DPM Shipments entering the DTS. For DPM shipments entering the DTS, the final overseas destination TO must be entered, not the CONUS WPOE/APOE, which appears in Block 18.

(4) Consolidated DPM Shipments entering the DTS. Enter the responsible destination TO and BLOC receiving the largest shipment by weight.

u. Block 21, Bill Charges To.

(1) Army and Air Force Shipments. Enter: Defense Finance and Accounting Service Indianapolis Center, Transportation Operations (DFAS-1-THA), Indianapolis, IN 46249-0611.

(2) Navy Shipments. Enter: Defense Finance and Accounting Service, Norfolk Location, P.O. Box 8489, Norfolk, VA 23503-0489.

(3) Marine Corps Shipments. Enter: Comptroller, Transportation Voucher Certification Branch, ATTN: Code 470, 814 Radford Blvd., Suite 20318, Albany, GA 31704-0318.

(4) Coast Guard Shipments. Enter: Commanding Officer (OTABl), US Coast Guard Finance Center, 1430A Kristina Way, Chesapeake, VA 23326-0015.

(5) Defense Logistics Agency, Defense Intelligence Agency, and Office of the Secretary of Defense Shipments. Enter: US Army Finance and Accounting Center, Transportation Operations, Indianapolis, IN 46249.

(6) All Air Force NAF. Enter: HQ AFSVA/SVFFC, 10100 Reunion Place, Suite 400, San Antonio, TX 78215-4138

(7) Other. Enter the finance office indicated in the member's/employee's orders as being responsible for payment.

v. Block 22, Via.

(1) TGBL Shipments. Leave blank.

(2) DPM Shipments.

(a) INTL/AIR/COMM/DPM Shipments. Show the complete routing from origin to final destination as provided by the initial carrier.

(b) All Other DPM Shipments. Only the name of the originating carrier is necessary unless it is to the advantage of the Government to specify the connecting carriers. It is the obligation of the originating carrier to forward shipments over a route that will provide the lowest published charges within the mode. When it is necessary to route shipments, routing must be selected by experienced transportation personnel who are aware of various tariff restrictions and limitations to ensure that services are obtained at the lowest possible cost.

(3) POVs. The same instructions apply as those shown under "All other DPM Shipments."

(4) Mobile Homes. For mobile home shipments, enter the method of movement, e.g., towage, lowboy.

w. Block 23, No entry required.

x. Block 24, Appropriations Chargeable.

(1) Army Shipments. Enter the movement designator code from the member's/employee's orders. Also, for ITGBL shipments, enter the four-digit TAC. TACs are available via Internet. The URL is https://www.daas.dla.mil/tac_inq/tac_menu.html.

(2) Air Force Shipments. Enter the accounting data and the abbreviated/Air Force seven digit Abbreviated Transportation Accounting Code from the member's/employee's travel order. For ITGBL shipments enter the TAC. The URL is https://www.daas.dla.mil/tac_inq/tac_menu.html.

(3) Navy Shipments. Enter the four-digit TAC shown in the member's/employee's orders. TACs are available via Internet. The URL is https://www.daas.dla.mil/tac_inq/tac_menu.html.

(4) Marine Corps Shipments. Enter the line of appropriation and Standard Document Number from the member's/employee's orders or from the current year edition of the Marine Corps Bulletin 4610. The Bulletin can be found on HQMC website http://www.hqmc.usmc.mil/lftweb.nsf then click on Other Documents and MCBul 4610.

(5) Coast Guard Shipments. Enter the accounting data indicated on the member's/employee's travel order. It is normally located in Block 9 of the Coast Guard Form 5131, Standard Travel Orders for Military Personnel, or specified in the body of a letter-format travel order.

(6) All Other DOD Shipments. Enter the accounting data from the member's/employee's orders. Also, for all ITGBL shipments, enter the four-digit TAC shown in the member's/employee's orders. Show the word "TAC" followed by the four-digit code. TACs are available via Internet. The URL is https://www.daas.dla.mil/tac_inq/tac_menu.html.

y. Block 25, Remarks.

(1) SIT.

(a) TGBL Shipments Authorized SIT. If SIT was used at origin, enter: _____ days SIT were used at origin.

(b) Shipments from NTS. If SIT was used, enter: _____ days temporary storage were used at origin.

(c) Shipments Not Authorized SIT. Enter: SIT not authorized.

(2) Export and Import Annotations. For shipments originating in the CONUS and destined overseas, enter: For Export. For shipments moving by air, originating overseas and destined for the CONUS, enter: Imported by Air.

(3) Unpacking at Destination. When the carrier does not perform packing services at origin and unpacking services are required at destination, enter "Unpacking Required at Destination." This will apply to shipments moving from NTS and UB shipments when unpacking of UB is requested by the member/employee and authorized by the TO. When unpacking is authorized on the PPGBL, the carrier/agent must prepare a DD Form 619-1 (Figure 401-3) for labor charges. The member/employee will initial the DD Form 619-1 to verify that unpacking services were performed. If the PPGBL for a shipment from NTS is not annotated, the destination TO must authorize unpacking services on the DD Form 619-1.

(4) TGBL Notification.

(a) Direct Delivery Requested. If the member/employee has made advance arrangements with the origin TO for direct delivery to the destination residence, enter: Direct Delivery Authorized. Before completing the delivery, the carrier must notify the TO or duty officer specified in Block 20.

(b) Direct Delivery Not Requested. Enter: Before effecting delivery to a residence or placing in storage, the carrier must notify the TO specified in Block 20.

(c) Blue Bark Shipments. Enter: Direct Delivery is not authorized. The carrier must contact the TO specified in Block 20 for instructions.

(5) Retrograde Shipments When Intermediate SIT Is Involved. Enter: Carrier must request disposition instructions from the TO at the CONUS military ocean or air terminal.

(6) Mobile Homes.

(a) Enter: Necessary repairs and services are authorized, not to exceed $150 total (tire or tube replacement is excluded) without prior approval of the origin TO or member/employee. The total specified may be greater than $150 if authorized by the member/employee, in writing, at the time of counseling.

(b) Also enter amounts paid by the origin TO on a local contract for accessorial services not performed by the member/employee or the carrier.

(c) Army, Air Force, Marine Corps, and other Agencies personnel not remaining in a pay status--insert the entitlement cost basis (maximum allowable cost) of the mobile home shipment. For all other Army, Air Force, and Marine Corps personnel, 105 percent of the Base Line HHG Rate and the maximum packing rate must be entered.

(d) For Navy personnel, the cost basis will not be shown.

(7) Special Authorization. For shipments made from or consigned to a point not specified in the member's/employee's orders, enter "Shipment authorized from (city/military installation, county, and state/country) to (city/military installation, county, and state/country)." For Army shipments, also enter "Shipment to authorized destination would have been under (enter MTMC rate solicitation #) at a total cost of $ (enter total charges)."

(8) Use of Government-Owned Containers. When Government-owned containers are used for shipments moving in TGBL service, enter the statement from the rate solicitation. Also enter the number and type of containers used.

(9) Administrative Weight Limitation. For shipments to or from OCONUS where administrative weight limitations are in effect, enter the following notation: "Maximum administrative weight allowance for household goods/unaccompanied baggage is (insert weight)." (NOTE: Weight limitations for Navy shippers must be listed on the member's/employee's orders).

(10) NTS. When a shipment is consigned to an NTS facility, enter "For Nontemporary Storage."

(11) Firearms. When the shipment contains firearms, enter "This Shipment Contains Firearms."

(12) Nonperformance of Interior Packing. When no packing of interior boxes (such as cartons, drums, and dish packs) is performed on international containerized shipments moving under SFRs, annotate the PPGBL with the solicitation item number and the statement, "Apply (show $ amount) per net cwt reduction to the SFR."

(13) DPM and Code 5 Shipments Moving Through CONUS Military Ocean Terminals (MOTs). Enter the prelodge, predelivery notification requirements as set forth by the MOT in the PPCIG, Volume I (CONUS).

(14) POVs. Enter year, make, serial number, license number, and any other information necessary to identify the POV.

(15) Reweigh Required. When it is determined by the TO that a reweigh is necessary, or when a reweigh is requested by the member/employee at origin, the TO must annotate the PPGBL with the words "REWEIGH REQUIRED".

(16) DDD/ETA at POE. For Code 5 and T shipments, enter "DDD: (insert date) at the POE." Compute the date from the ETA (Block 16) shown on the TCMD.

(a) For Code J shipments, enter "RPDD, (insert date) at the POE." The RPDD is established from the pickup date plus four workdays (not including weekends and holidays) for the origin processing time, plus the LTL standard transit time (including weekends and holidays), plus two workdays for the port agent processing and delivery (not including weekends and holidays). For example:

UB Shipment from Texas to Dover, LTL standard transit time is six days.

Pickup Date: 4 May 01 (Friday)

Origin Agent Processing: 7 May 01 (Monday) - 10 May 01 (Thursday)

LTL Standard Transit Time: 11 May 01 (Friday) - 16 May 01 (Wednesday)

Port Agent Processing: 17 May 01 (Thursday) - 18 May 01 (Friday)

RPDD Printed on PPGBL: 18 May 01 (Friday)

z. Block 26, Packages.

(1) TGBL Shipments. Enter: 1 LOT.

(2) DPM Shipments. Enter the number and type of containers, e.g., 1 FL - 2 CTNS.

(3) Mobile Home Shipments. Enter: 1 EA.

(4) POVs. Enter: 1 VO.

aa. Block 27, Description of Shipment. Enter the words "Household Goods," "Unaccompanied Baggage," "Personal Effects," "Mobile Home with personal effects as indicated on the inventory". For POVs, show the property classification and National Motor Freight Classification/Standard Transportation Commodity Code number.

(1) TGBL Containerized Shipments. The carrier must enter the total number of containers and total cube, along with dimensions.

(2) DPM Shipments. After HHG or personal effects, the DPM contractor must enter the aggregate weight and cube of the total number of each different type of container shown in Block 26.

(3) Mobile Homes. After "Mobile Home with personal effects as indicated on the inventory," enter the "length, width, height" of the mobile home in feet and inches. If the mobile home is the expando type, indicate "expandable" and specify type (such as single, double, or triple room, one side or both sides). Also, enter the make, model, year, serial number, current license number, state, and year issued. If additional space is required, use the "remarks" block.

(4) DPM or POV Consolidated Shipments. A single PPGBL with continuation sheets must be issued. Enter: "This is a consolidated shipment. See continuation sheet." Each individual shipment lot must be identified on the continuation sheet, and the member's/employee's name, rank/grade, SSAN, delivery address, and authority for shipment must be specified.

(5) Shipment Valuation. The preprinted statement on the PPGBL must be the only reference to the valuation of a shipment unless a higher valuation is declared. When this occurs, the following statement must be entered:

(a) For TGBL Domestic Shipments. Enter one of the following:

1 Increased Valuation - "Shipment is released at a declared lump sum value of $_____" or "Shipment is released at a valuation of $_____ times the net weight in pounds of the shipment."

2 Full Replacement Protection - "Shipment is released at full replacement protection of $3.50 times the net weight in pounds of the shipment or $21,000, whichever is greater."

(b) DPM Shipments. Enter: Released valuation not exceeding _____ cents per lb.

bb. Block 28, Weight.

(1) TGBL Shipments. The carrier must enter the gross, tare, and net weight in this column. The net weight must include the weight of PBP&E and consumable items (CONS).

(2) DPM Shipments. Enter the total gross, tare, and net weight of the shipment.

(3) PBP&E. PBP&E must be weighed separately and the weight must be inserted in the space provided. (See Chapter 403, Paragraph B.3.)

(4) CONS. CONS must be weighed separately and the weight must be annotated in the space provided for PBP&E weight. CONS must precede this weight in order to distinguish between the weight of consumables and PBP&E.

cc. Blocks 29 and 30, For Use by Destination Carrier Only. The carrier must enter these data elements for billing.

dd. Block 31, Tariff or Special Rate Authorities. Enter the special rate authority and for ITGBL shipments, the rate per cwt (such as, RS I-8/$52.50 cwt) and, for domestic shipments enter percentage (such as RS D-5/95%). For OTO shipments, enter the words "one-time-only" or "OTO", the carrier's rate tender number, and the OTO rate.

ee. Block 32a, Issuing Officer. Enter the name and title of the issuing TO. Signature of the issuing TO is not required.

ff. Block 32b, Issuing Office. Enter the BLOC and full name of the military installation or activity issuing the PPGBL.

gg. Block 33a, Name of Transportation Company. Enter the same information as in Block 1.

hh. Block 33b, Date of Receipt of Shipment. The carrier must enter the actual date the shipment is picked up.

ii. Block 33c, Signature of Agent/Driver. The carrier/agent or driver must sign the PPGBL acknowledging receipt.

jj. Block 33d, PER. If the agent's name is signed by the agent's authorized representative, the initials of the representative must appear in this block.

kk. Block 34, For Use of Paying Officer. The TO must check the block to identify the reason for any excess cost involved in the shipment. The "Remarks" block must be used to fully explain the reason for the excess cost. Block 34 must be marked for all Navy sponsored shipments that include a boat or mobile home.

ll. Blocks 35a through 35g, Certificate of Carrier Billing for Charges. The carrier authorized to bill for charges must complete this portion of the PPGBL after delivery has been accomplished.

mm. Block 36, Special Services Ordered (Reverse of PPGBL). The issuing TO must enter any special services authorized.

E. DISTRIBUTION AND SUBSTITUTE DOCUMENTS

1. General. The PPGBL is printed as a seven-part form (original and 6 copies). This Paragraph provides guidance for the proper distribution of the PPGBL for all methods and modes of shipment. It also discusses procedures for the use of substitute documents when the original PPGBL has been lost or destroyed.

2. Distribution. The PPGBL must be processed and distributed as outlined below. When laser printed PPGBLs are used, ensure that enough copies of the SF 1203 are made for distribution.

a. Original SF 1203	Provide to the origin carrier for submission to the finance center for payment.
b. Shipping Order SF 1204 (Copy of SF 1203 for laser printed PPGBLs)	Provide to the origin carrier for retention as actual service order.
c. Freight Waybill Carrier's Copy SF 1205 (Copy of SF 1203 for laser printed PPGBLs)	Provide to the origin carrier for retention. May be used as substitute document (for a lost PPGBL).
d. Accounting Copy SF1203A (Copy of SF 1203 for laser printed PPGBLs)	For Army, Air Force, Navy, Marine Corps, and Agency Shipments--Provide to carrier for annotation of weight charges as required by TOS and for TGBL domestic--show mileage.
e. Member/Employee Copy SF 1203B (Copy of SF 1203 for laser printed PPGBLs)	For All Methods Except DPM – Give to origin carrier, who must: - Give to the member/employee when pickup is made at the residence. - Give to the member/employee when delivery is made at the residence if the origin pickup is from NTS. - Give to the destination TO if the shipment originates from NTS and is to be placed in SIT at the destination. The TO must give the copy to the member/employee or the member's/employee's agent. For DPM Shipments - The TO must forward the copy to the member's/employee's destination address or unit of assignment, if known.

f. Property Received Copy SF 1203A (Copy of SF 1203 for laser printed PPGBLs)	Forward to the destination TO, who has final delivery responsibility, with required supporting documents, to arrive in advance of the shipment. Blue Bark shipments should be so annotated and forwarded via certified mail. Notify destination TO by telephone or message of Blue Bark shipment.
g. Property Shipped Copy SF 1203A (Copy of SF 1203 for laser printed PPGBLs)	Disposition is as follows: For TGBL Shipments, retain in an origin suspense file pending receipt of the accounting copy. Upon receipt, annotate the Property Shipped Copy and place in the shipment file. For DPM Shipment, retain in the origin shipment file.

3. PPGBL Canceled After Distribution. When a PPGBL must be canceled after partial or complete distribution, a memorandum copy (and reproductions) must be clearly marked "canceled" and forwarded to each recipient of the initial distribution and HQ MTMC/MTPP-S. Also, when a PPGBL Correction Notice is prepared, a complete distribution must be made IAW Paragraph F below.

4. Substitute Documents Issued for a Lost PPGBL.

a. Issuance. When it is evident that the original PPGBL has been lost or destroyed, the carrier must forward the original Freight Waybill (SF 1205) to the finance center for payment. When both the original PPGBL and the original Freight Waybill have been lost or destroyed, the carrier must request a certified memorandum copy for use as a substitute billing document. The origin TO must annotate the certified memorandum copy as follows: "I certify that the services shown on this freight waybill were requested." This certified memorandum copy will be signed, dated, and returned to the carrier for billing.

b. Records and Control. The TO must note all memorandum PPGBLs in the PPGBL accountability record and promptly must notify the responsible paying finance center so the finance center may take steps to preclude duplicate payment of the transportation charges.

F. PREPARATION OF THE US GOVERNMENT BILL OF LADING CORRECTION NOTICE (SF 1200)

1. General.

a. This Paragraph provides guidance and instruction in the preparation of the SF 1200 (Figure 413-2) for making alterations and corrections to PPGBLs.

b. The subparagraph below is keyed to the numbered blocks on the SF 1200.

(1) Date Notice Prepared (unnumbered). Enter the date the SF 1200 is prepared.

(2) GBL Number (Block 1). Enter the prefix symbol and serial number of the PPGBL being corrected. Only one PPGBL will be corrected on each SF 1200.

(3) Date GBL Was Issued (Block 2). Enter the issue date shown on the PPGBL being corrected.

(4) Total Weight Shown on GBL (Block 3). Enter the total weight shown on the PPGBL.

(5) Origin (Block 4). Enter the name of the origin address as shown on the PPGBL.

(6) Destination (Block 5). Enter destination address as shown on the PPGBL.

(7) Route (Block 6). Enter route shown on "via" block on the PPGBL. Leave blank if no route is shown on the PPGBL.

(8) Issuing Office (Block 7). Enter the name of the activity that issued the PPGBL.

(9) To (Block 8). Enter name, address, and ZIP code of activity to which the original SF 1200 is to be sent.

(10) Payment Data (Block 9). Self-explanatory.

(11) From (Block 10). Enter name, address, and ZIP code of activity issuing the SF 1200.

(12) Bill of Lading Now Reads (Block 11). Enter information from the PPGBL that is to be corrected. If the SF 1200 is being issued to include information omitted from the PPGBL, enter the words "information omitted" in this block.

(13) Correct Bill of Lading to Read (Block 12). Enter information to be shown on the corrected PPGBL.

(14) Authority for Correction (Block 13). Enter information, which justifies correction.

(15) Remarks (Block 14). Enter remarks pertaining to the correction being made.

(16) Information Copy To (Block 15). Enter name, address, and ZIP code of all the recipients of SF 1200, excluding the addresses shown in Blocks 8 and 10.

(17) Signature and Title of Initiating Official (Block 16). Self-explanatory.

(18) Carrier Representative's Signature (Block 17). Self-explanatory.

G. DISTRIBUTION OF SF 1200

1. When transportation charges are affected by the alteration or correction, the SF 1200 must be prepared in sufficient quantities to permit the following distribution:

a. A copy to consignee.

b. A copy to the disbursing officer.

c. Original and one copy to the originating carrier.

d. Copy to the office of the shipper service.

e. Copy to be attached to the consignor copy of the PPGBL.

f. Copies to all other addresses shown in "Information copy to" (Block 15).

g. Copy retained by the initiator of the SF 1200.

2. When the disbursing office or appropriation data changes, the SF 1200 must be prepared in sufficient quantity to permit the following distribution:

a. Original to the initial disbursing office.

b. Copy to the new disbursing office as amended.

c. Two copies to the consignee.

d. Copy to the office of the shipper service.

e. Copy to origin carrier.

f. Copy to be attached to the consignor copy of the PPGBL.

3. When any other alterations or corrections are made, the SF 1200 must be prepared in sufficient quantities to permit the same distribution as stated in Paragraph G.1. above.

H. WHO MAY ISSUE SF 1200

1. Issuing Officer. In all cases where the issuing officer detects that an alteration or correction is required, the issuing officer must initiate the SF 1200. This issuing officer must also make distribution IAW Paragraph G.

2. Consignee.

a. When the consignee considers it necessary to make alterations or corrections which have not been authorized by the issuing officer, the consignee must notify the issuing office by electrical means or in writing, unless it is obvious that immediate alterations or corrections are

necessary to reflect the exact facts relating to the shipment. If a reply to this notification is not received within 30 days, the consignee must make alterations or corrections.

b. When it is obvious that immediate alterations or corrections are necessary to reflect the exact facts relating to the shipment, the consignee may make the necessary alterations or corrections without the issuing officer's authorization.

U.S. GOVERNMENT BILL OF LADING — PRIVATELY OWNED PERSONAL PROPERTY | ORIGINAL B/L NO.

1. TRANSPORTATION COMPANY (If agent) TENDERED TO: "SAMPLE

2. SCAC | 3. SERVICE CODE | 4. SHIPMENT NO. OF | 5. DATE B/L ISSUED

6. REQUESTED PACKING DATE | 7. REQUESTED PICKUP DATE | 8. REQUIRED DELIVERY DATE

9. **IMPORTANT**

Regulations require Original, Shipping Order, and Freight Waybills (Original and Carrier's Copy) to be surrendered to carrier after signature and SF 1203B, Memorandum Copy, to be furnished to consignee (property owner).

10. PROPERTY OWNER'S NAME, SOCIAL SECURITY NO., RANK AND PAY GRADE

11. AUTHORITY FOR SHIPMENT (Order No., Par. No., HQ) | 12. DATE OF ORDER

13. EXTRA PICKUP/DELIVERY (Complete address)

14. DEPARTMENT/AGENCY | 15. TRANSPORTATION CONTROL NO.

16. Received by the transportation company named above, subject to conditions named on reverse hereof, the property hereinafter described, in apparent good order and condition (contents and value unknown), to be forwarded to destination by the said company and connecting lines, there to be delivered in like good order and condition to said consignee.

17. FULL NAME OF SHIPPER

18. CONSIGNEE (Name and destination delivery address) (See block 13)

19. FROM (Complete address of point of pickup) (See block 13)

20. RESPONSIBLE DESTINATION INSTALLATION/OFFICE | GBLOC

21. BILL CHARGES TO (Dept./Agcy., Bur./Off., and complete mailing address)

22. VIA (Names of interlining carriers)

23. FOR CARRIER USE ONLY—WAYBILL/FREIGHT BILL NO.

24. APPROPRIATION CHARGEABLE

25. REMARKS (If extra services are ordered, see ADMINISTRATIVE DIRECTION NO. 2 on reverse.)

26. PACKAGES NO.	KIND	27. DESCRIPTION OF SHIPMENT* (Specify)	28. WEIGHT†	FOR USE OF DESTINATION CARRIER ONLY: SERVICES	29. RATE	30. CHARGES
			GROSS	LINE-HAUL TRANSPORTATION		
			TARE	PACKING/UNPACKING		
			NET	OTHER ACCESSORIAL SERVICES		
			† Incl. professional books, papers, and equipment weighing:	TOTAL		

31. TARIFF OR SPECIAL RATE AUTHORITIES

* Issued at lowest valuation cited in appropriate tender or tariff unless otherwise stated hereon. B/L NO.

FOR USE OF ISSUING OFFICE: 32a. ISSUING OFFICER (Name and title)

32b. ISSUING OFFICE (Name and complete address) | GBLOC

CERTIFICATE FOR RECEIPT OF SHIPMENT AND ORIGINAL BILL OF LADING

33a. NAME OF TRANSPORTATION COMPANY | 33b. DATE OF RECEIPT OF SHIPMENT

33c. SIGNATURE OF AGENT/DRIVER | 33d. PER

34. FOR USE OF PAYING OFFICER (Does not affect carrier charges)

UNAUTHORIZED ITEMS | EXCESS DISTANCE | EXCESS VALUATION | EXCESS WEIGHT | Other (Explain under remarks)

CERTIFICATE OF CARRIER BILLING FOR CHARGES—CONSIGNEE MUST NOT PAY ANY CHARGES ON THIS SHIPMENT

35a. ON (Date) | 35b. AT (Actual delivery point) | 35c. THE (Name of delivering carrier)

35d. DELIVERED THIS CONSIGNMENT TO ☐ STORAGE IN TRANSIT ☐ RESIDENCE

35e. COMPLETE AND IN APPARENT GOOD ORDER EXCEPT AS MAY BE INDICATED HEREAFTER ☐ SHORTAGE ☐ DAMAGE ☐ CARRIER OS&D REPORT ATTACHED

35f. NAME OF DESTINATION CARRIER (Carrier authorized to bill charges) "SAMPLE"

35g. SIGNATURE OF CARRIER'S AUTHORIZED AGENT

(Carrier to execute and attach Certificate of Storage and Liability for shipment placed in storage in transit.

EXCEPTION TO SF1203 APPROVED BY GSA/IRMS 3/92. 1203-106-02 STANDARD FORM 1203 (7-87) PRESCRIBED BY GSA, FPMR (41 CFR) 101-41.3

Figure 413-1. SF 1203, US Government Bill of Lading-Privately Owned Personal Property

TERMS AND CONDITIONS. It is mutually agreed and understood between the United States and carriers, including forwarders, who are parties to this bill of lading that:

This bill of lading is governed by the regulations relating thereto as published in Title 41, Part 101-41, of the Code of Federal Regulations.

Except as provided in 41 CFR 101 or as otherwise stated hereon, this bill of lading is also subject to the same rules and conditions as govern commercial shipments made on the usual forms provided therefore by the carrier.

All parties to this bill of lading (carriers, agents, freight forwarders, and others) recognizing that this shipment is made under the auspices of the United States Government, agree to forgo any liens that may arise from any cause whatsoever and not to detain or impound this shipment for any reason.

Carrier must in no way demand prepayment of charges nor make any collection of charges at time of delivery.

Interest must accrue from the voucher payment date on overcharges made hereunder and must be paid at the same rate in effect on that date as published by the Secretary of the Treasury pursuant to the Debt Collection Act of 1982.

PRIVACY ACT DATA (5 USC 552a). This form serves as a procurement, accountability and payment form in the shipment of privately owned personal property for the account of the U.S.

Information thereon may be used to prepare related documents or collect excess costs. Disclosure of information is voluntary but its absence may preclude shipment of property.

GENERAL INSTRUCTIONS AND ADMINISTRATIVE DIRECTIONS.

1. Continuation sheets of the prescribed form should be used and attached hereto when space under "Description of Shipment" on the face of this bill of lading is inadequate.

2. Where accessorial or special services, such as exclusive use of a car or truck, expedited service, protective service, reconsignment, etc., are ordered incident to the line-haul transportation, the bill of lading must be endorsed to show the name of the carrier upon which the request was made and the kind and scope of the special services ordered. The endorsement may be placed on the face hereof under the "Description of Shipment" or under the "Remarks" if space is available, or in the space provided on this page for "Special Services Ordered," and must be signed by or for the person who ordered the services. If such an endorsement is impractical, the same information may be set forth in a statement bearing the number of the covering bill of lading, which must be signed by or for the person who ordered the services and, if possible, attached to the bill of lading. If the bill of lading is not available, the original and one copy of the statement must be surrendered to the carrier from which the services were ordered, the original to be transmitted to the last line-haul carrier for presentation in connection with the bill for line-haul transportation charges. Where accessorial or special services are shown as ordered but were not furnished, the bill of lading must be so annotated.

3. Shortage or damage reports must be made on agency-designated forms,s not on the bill of lading. Consignees must observe the instructions on the reverse of the Consignee's Copy of the bill of lading.

4. Instructions for billing charges on Standard Form 1113, Public Voucher for Transportation Charges, are found in GSA's Federal Property Management Regulations 101-41 (41 CFR) which may be purchased from Superintendent of Documents, U.S. Government Printing Office, Washington, DC 20402. SF 1113 may be purchased from the Superintendent of Documents or reproduced in accordance with 41 CFR 101-41.313-2.

5. American-flag carriers must be used for U.S. Government-financed carriage of personal property (household goods, personal effects, or privately owned vehicles) as prescribed by 46 USC 1241 and for U.S. Government-financed movement of freight as prescribed by 49 USC 1517. Statement by authorizing official justifying use of foreign-flag carrier must accompany appropriate voucher. The air carrier or air freight forwarder must submit with each bill involving the use of a foreign-flag carrier, in whole or in part, a copy of the air waybill, manifest or other documentation showing the underlying air carriers used with justification statement for use of the foreign-flag carrier. See General Accounting Office standards in 4 CFR 52.2.

SPECIAL SERVICES ORDERED

Figure 413-1. SF 1203, US Government Bill of Lading (Cont'd)

GOVERNMENT BILL OF LADING CORRECTION NOTICE

DATE NOTICE PREPARED

1. GBL NUMBER

2. DATE GBL WAS ISSUED

3. TOTAL WEIGHT SHOWN ON GBL

4. ORIGIN *(As shown in "Origin" block on GBL.)*

5. DESTINATION *(As shown in "Destination" block on GBL.)*

6. ROUTE *(Complete routing shown on GBL.)*

7. ISSUING OFFICE *(As shown on GBL under "For Use of Issuing Office.")*

8. TO: *(Name and address of carrier/activity to which directed, including ZIP Code.)*

9. ***Complete Items 9a., b., and c. only when correction is made after transportation charges have been paid.***

a. D.O. VOUCHER NUMBER

b. D.O. VOUCHER DATE

c. D.O. SYMBOL

10. FROM: *(Full name and address of the activity initiating the notice, including ZIP Code.)*

11. BILL OF LADING NOW READS *(Show the information as it reads prior to correction.)*

12. CORRECT BILL OF LADING TO READ *(Show how the corrected information should read.)*

13. AUTHORITY FOR CORRECTION *(Tariff and item numbers; classification and item number; or other authority for making the change.)*

14. REMARKS *(Pertinent information not otherwise provided on the form. If more space is required, use reverse side of this form.)*

15. INFORMATION COPY TO *(Name and address, including ZIP Code.)*

16. SIGNATURE AND TITLE OF INITIATING OFFICIAL

17. CARRIER REPRESENTATIVE'S SIGNATURE *(Require when notice is initiated by shipper and transportation charges are affected.)*

Form designed using PerForm Pro software.

STANDARD FORM 1200 (8-82)
Prescribed by GSA, FPMR (41 CFR) 101-41.3

Figure 413-2. SF 1200, Government Bill of Lading Correction Notice

THIS PAGE INTENTIONALLY LEFT BLANK

APPENDIX A

LETTER OF INTENT (LOI)
HOUSEHOLD GOODS OR UNACCOMPANIED BAGGAGE

A. Instructions for completing a LOI Form (Figure A-1): The form must be typed.

1. This section is for the Personal Property Shipping Office (PPSO) use only: Carriers do not use this section.

a. BLOCK A. Title of approving official.

b. BLOCK B. Signature of person authorized to sign this form.

c. BLOCK C. Date accepted by PPSO.

d. BLOCK D. The Cycle the LOI will become effective, e.g., Domestic Summer 2002/Domestic Winter 2002 (DS02/DW02), or International Summer 2002/International Winter 2002 (IS02/IW02).

2. This section is for carrier use only. Title, typed name, and the signature of the carrier approving official and date.

a. CARRIER NAME: Full name of carrier.

b. CARRIER SCAC: Carrier's 4-letter Standard Carrier Alpha Code.

c. CARRIER PHONE: Carrier must indicate the same phone number(s) as on the Tender of Service Signature Sheet (TOSSS) filed with Headquarters (HQ) Military Traffic Management Command (MTMC).

d. CARRIER ADDRESS: If both a physical address and a post office address are indicated on the TOSSS filed with HQ MTMC, indicate the same exact addresses.

e. CARRIER TELEX: Carrier must indicate the same TELEX number as on the TOSSS filed with HQ MTMC.

f. CARRIER FAX: Carrier must indicate the same FAX number as on the TOSSS filed with HQ MTMC.

g. CARRIER E-MAIL: Carrier must indicate the same e-mail address as on the TOSSS filed with HQ MTMC.

h. TO: PPSO address and Government Bill of Lading Office Code.

i. TYPE OF LOI: Check type of LOI. Only one type of LOI must be indicated per LOI.

j. NEW OR REPLACEMENT LOI: Indicate if this is a new or replacement LOI.

(1) New LOI: If carrier does not have a valid LOI on file at the PPSO.

(2) Replacement LOI: (i.e., change of agent, phone number, address, etc.), enter "Acceptance Date" of the LOI on file being replaced.

k. THIS LOI IS APPLICABLE TO YOUR OPERATING AREA(S). List operating area(s).

l. SCOPE OF OPERATING AUTHORITY AS INDICATED ON CERTIFICATES/PERMITS ON FILE WITH HEADQUARTERS MTMC: Check the appropriate box. List the 2-letter State code for any exception(s). For intrastate, check Block G and list the 2-letter State code. If requested by the PPSO, intrastate carriers must provide a copy of their operating authority.

m. LIST OF DESIGNATED AGENTS:

(1) List the Code of Service (i.e., Code 1, Code J, Code 4, etc.).

(2) If the carrier listed is your booking agent, show a "Y", if carrier listed is not your booking agent, show an "N".

(3) Use only if the agent has a different mailing address than the physical address.

(4) List the full name and address of the agent.

(5) List the phone number, TELEX number and FAX number.

n. REMARKS: This section may be used by the carrier and/or PPSO. This section may be used for any additional information. If a carrier has a restricted operating authority, it must be listed here. The PPSO must list reason for rejection (if applicable) in this Block.

NOTE: If any information changes, the carrier must submit an updated TOSSS to HQ MTMC, and a "Replacement" LOI to the PPSO.

B. This form may be entered in a personal computer, but the format and content must be exactly the same as Figure A-1.

LETTER OF INTENT (LOI) **Page 1 of 2**

HOUSEHOLD GOODS OR UNACCOMPANIED BAGGAGE (PRESCRIBING DIRECTIVE IS DOD 4500.9-R)

THIS SECTION FOR PPSO USE ONLY

A. TITLE C. ACCEPTANCE DATE D. THIS LOI IS EFFECTIVE

B. SIGNATURE _____CYCLE

THIS SECTION FOR CARRIER USE ONLY

YOU ARE REQUESTED TO ACCEPT THIS LOI AS EVIDENCE OF OUR INTENT TO PROVIDE PERSONAL PROPERTY SERVICES FROM YOUR AREA(S) OF RESPONSIBILITY. WE ARE A DOD APPROVED CARRIER HAVING COPIES OF FEDERAL AND/OR STATE CERTIFICATES AND/OR PERMITS ON FILE WITH HQ MTMC. I CERTIFY THAT THE FOLLOWING STATEMENTS ARE: TRUE AND COMPLETE. I UNDERSTAND THAT ANY MISREPRESENTATION AND/OR FALSIFICATION MAY BE SUBJECT TO PROSECUTION UNDER SECTION 1001, TITLE 18, UNITED STATES CODE. I FURTHER CERTIFY I HAVE WRITTEN AGREEMENTS WITH AGENTS INDICATED ON THIS LOI FOR THE PURPOSE OF HANDLING NOTED CODES OF SERVICE. I CERTIFY THAT FACILITIES OF THESE AGENTS HAVE BEEN INSPECTED BY AN AUTHORIZED REPRESENTATIVE OF MY COMPANY AND SUCH FACILITIES MEET THE STANDARDS OF THE TENDER OF SERVICE.

TITLE, TYPED NAME AND SIGNATURE OF CARRIER APPROVING OFFICIAL DATE

LOI WILL REMAIN ON FILE CONTINUOUSLY UNTIL REPLACED WITH ANOTHER LOI OR RETURNED BY PPSO.

I. CARRIER NAME:	2. CARRIER SCAC:	3. CARRIER PHONE:

4. CARRIER ADDRESS: CARRIER P.O. BOX:	5. CARRIER TELEX: 6. CARRIER FAX: 7. CARRIER EMAIL:

8. TO: (PERSONAL PROPERTY SHIPPING OFFICE/BLOC)

9. TYPE OF LOI: (CHECK ONLY ONE TYPE PER FORM)

A. ___DOMESTIC INTRASTATE B. ___DOMESTIC INTERSTATE C. ___INTERNATIONAL HHG D.___INTERNATIONAL UB

10. NEW OR REPLACEMENT LOI:

A. ___NEW LOI B. ___THIS LOI REPLACES LOI ACCEPTED _____

11. THIS LOI IS APPLICABLE TO YOUR OPERATING AREA(S) (LIST AREA(S)):

12. SCOPE OF OPERATING AUTHORITY AS INDICATED ON CERTIFICATES/PERMITS ON FILE WITH HEADQUARTERS MTMC(*):

A. C = CONU S		E. CAE = CONUS + AK W/EXCEPTION ( )
B CA = CONUS + AK		F CAHE = CONUS + AK & HI W/EXCEPTION ( )
C. CAH=CONUS + AK & HI		G. I = INTRASTATE ( )
D. CE =CONUS W/EXCEPTION ( )		* PPSO MAY REQUEST A COPY

Figure A-1. Letter of Intent (LOI)

LETTER OF INTENT (LOI)

HOUSEHOLD GOODS OR UNACCOMPANIED BAGGAGE (PRESCRIBING DIRECTIVE IS DOD 4500.9-R)

CARRIER SCAC:

13. LIST OF DESIGNATED AGENTS:

A. C/S	B. BOOKING AGENT	C. AGENT NAME/MAILING ADDRESS	D. AGENT PHYSICAL ADDRESS	E. PHONE/TELEX/FAX

14. REMARKS (THIS SECTION MAY BE USED BY CARRIER AND/OR PPSO)

Figure A-1. Letter of Intent (Cont'd)

APPENDIX B

TENDER OF SERVICE
PERSONAL PROPERTY HOUSEHOLD GOODS (HHG) AND UNACCOMPANIED BAGGAGE (UB)

PART I - QUALIFICATION

A. General

1. Gender. The first person singular pronoun is used throughout this Tender of Service and refers to a person, partnership, or corporation submitting such tender.

2. Tender of Service.

a. I understand that both this Tender of Service and Rate Solicitation are binding.

b. I will submit to the Commander, Military Traffic Management Command (MTMC), Attn: MTPP-HQ, 200 Stovall St., 11N57, Alexandria, VA 22332, the Tender of Service Signature Sheet (TOSSS) certifying that I have read and understand the terms and conditions and agree to provide service as set forth in this Tender of Service. I will retain the actual Tender of Service for my files.

c. As required on the TOSSS, I agree to either certify that I am not under common financial and/or administrative control with any other carrier(s) or forwarder(s) or to provide a list of the carrier(s) or forwarder(s) with which I have common financial and/or administrative control relationship. As used herein, the term "common financial and administrative control" means the power, actual as well as legal, to influence the management, direction, or functioning of a business organization. Circumstances surrounding organization or operation which may, but do not always, result in a common financial and administrative control relationship include the following:

(1) Majority or minority ownership.

(2) Familial relationships.

(3) Voting of securities.

(4) Common directors, officers and/or stockholders.

(5) Voting or Holding trusts.

(6) Associated companies.

(7) Contract or debt relationships.

d. I understand that submission of this TOSSS, hereafter referred to as tender, is a prerequisite to my consideration for Department of Defense (DOD) approval for the movement of personal property; that it does not obligate the Government in the distribution of traffic; and that such submission indicates that I consider myself to be qualified, willing, and able to accept shipments from military activities and seek such shipments under the terms set forth herein. I will be notified of changes to the tender by certified mail. Changes, additions, and deletions are effective upon receipt of notification unless specifically stated otherwise.

e. I agree to comply with all requirements of the carrier qualification program as prescribed by Headquarters (HQ) MTMC.

f. I agree to maintain a file with MTMC, keeping documentation up to date. This includes the TOSSS, financial data, changes in ownership, and any required certifications. Failure to maintain accurate documentation with MTMC may be a basis for being placed in nonuse.

3. Operating Authority.

a. I certify that I hold all necessary operating authority issued in my name, from regulatory bodies, for the transportation of personal property and will provide copies of each authority to the HQ MTMC, Attn: MTPP-HQ; or that I am exempt from such regulatory certificate by operation of law or order of a regulatory body and, in addition to tariff and legal requirements, agree to the provisions of this tender.

b. I agree to provide service to all areas contained in my operating authority from those installations where I have filed a letter of intent (LOI), except that in filing an LOI, I will not be required to offer services to destination areas which involve gateways requiring circuitous routing that would increase the distance from points of origin to points of destination of a shipment to an extent which would cause the required delivery date (RDD) to be missed. Failure to provide service to all areas covered by my LOI, as evidenced by a continuous pattern of selectivity as to shipments accepted, or continuous refusal of shipments to specific destination areas, may be grounds for suspension and possible return of my LOI.

4. Surface/Aerial Port Agents.

a. I understand and agree that the facilities of the continental United States (CONUS) and overseas surface/aerial port agents meet national/host country standards and codes with respect to fire safety, prevention and protection requirements; storage of combustible materials; and are utilized in accordance with (IAW) generally accepted warehousing practices. Facilities are subject to inspection by competent authority; if facilities are found unsatisfactory, I will be subject to nonuse until deficiencies are corrected or shipments are moved to an acceptable facility.

b. Upon request from HQ MTMC, I will submit to HQ MTMC, Attn: MTPP-HQ, copies of surface and aerial port rosters in the following manner:

(1) A copy of CONUS surface and aerial port terminal agents.

(2) A copy of overseas surface and aerial port terminal agents.

(3) A copy of overseas general agents.

5. Agency Facilities. I certify that the facilities of CONUS origin agents listed in the attachment to this tender have been inspected by a responsible representative of my company and that such facilities meet the standards of my company, the facilities, equipment, communications, e.g., telephone, intercom, etc., and personnel of my agents are separate and distinct from any other household goods carrier's agent.

6. Cargo Insurance. I shall provide a certification of cargo insurance reflecting coverage on a continuous basis in at least the amounts shown below to cover my legal liability. The certificate will contain the statement that the insurance company shall provide the Commander MTMC, Attn: MTPP-HQ, a 30-day written notice of any change, expiration, or cancellation of said policy. The underwriter of cargo insurance must have a policyholder's rating of "A" or better in the current issue of Best's Insurance Guide. The Certificate shall be prepared with original signatures and provided to the Commander, MTMC, Attn: MTPP-HQ, using MT-HQ Form 49-R, Certificate of Cargo Liability Insurance (Figure B-1). The following is the minimum cargo liability coverage required:

	Amount Per Shipment	Amount Per Aggregate Losses/ Damages at Any One Place and Time
Domestic	$10,800	$150,000
International	$10,800	$150,000

7. Financial Information.

a. I will provide financial data, when requesting initial approval from MTMC to participate in DOD traffic, at the discretion of MTMC considered necessary to assure satisfactory performance and avoidance of carrier/forwarder financial problems including but not limited to the following, individually, or in combination:

(1) Company certified financial statements.

(2) Certified Public Accountant review/audit (including footnotes) of financial statements.

The form, content, and format of each of the foregoing or combination thereof, is reserved to the discretion of MTMC.

b. After I have received DOD approval, I will, upon request of the HQ MTMC, provide information on financial and operational matters. Data will be in the manner, form, and content determined necessary by MTMC to resolve questions concerning my qualifications to remain a DOD-approved carrier. Financial data will be restricted to the balance sheet, profit and loss statement, and net worth statement for the last two taxable years. Company records and

supporting documentation relating to such questions will be made available for examination by MTMC representatives at the office of the company during normal business hours.

B. International (Also see Rate Solicitation)

1. Agency Facilities.

a. When granted a new approval by MTMC, I understand that I will submit a LOI directly to the overseas Transportation Office (TO) not later than the initial filing deadline specified in the solicitation letter. When requested by the TO, I shall furnish a signed Certificate of Agency Agreement (CAA). If my agent's facility is already approved, the TO will accept my LOI. If my agent's facility is not currently approved, I understand the TO will inspect the facility and approve or disapprove. Should the agent's facility not be adequate to support services offered, the TO will retain my LOI and notify the Commander, MTMC, of specifics. I understand that the Commander, MTMC, will place my company in non-use for the entire rate area until I obtain a qualified agent to represent my company or until the deficiency of my agent's facility is corrected. If I fail to take proper action by the next initial rate-filing deadline, I understand that MTMC will withdraw my approval and advise the TO to return my LOI.

b. If I find it necessary to change agents, I will immediately advise the TO. I understand the TO may accept a revised LOI, or CAA, signed by all parties, when my new agent's facility is currently approved. If my new agent's facility is not currently approved, I understand the TO will inspect the facility, make appropriate recommendations to the overseas commander and HQ MTMC, and await final approval from MTMC before accepting the LOI.

PART II - MUTUAL AGREEMENT/UNDERSTANDING

A. Service. I will perform prudent traffic management to provide service IAW the provisions of this tender.

B. Carrier Personnel. I will use only personnel qualified in their assigned duties in the handling of personal property. When any of my personnel appears to be under the influence of alcohol or drugs or uses abusive language, I will replace said individual(s) when requested by the TO or the TO's designated representative. I will not use prison labor in the movement of personal property belonging to members/employees of the DOD.

C. Through Responsibility.

1. All shipments tendered to me will be moved under my responsibility from origin to destination.

2. As part of my through responsibility, I understand that if through my fault or that of my agent, I ship the wrong property or all or a portion of a shipment is sent to the wrong destination, I will be responsible for the return of the erroneous shipment and movement of the correct property to the member's/employee's destination at my expense. Movement will be by an expedited method when the member/employee is in need of the property as ordered by the TO.

3. I understand that I will not be liable for movement costs for shipments released in error by a contractor, TO, owner, or owner's agent.

4. If I am unable to perform in such a manner as to complete the through movement of a shipment in a timely manner, the Government may take possession of the property and complete the movement. I understand that I will be liable for all additional costs incurred by the Government that are excess to those costs which would have been incurred by me or my agent if I had maintained total through movement of the shipment.

D. Report of Shipments on Hand. I agree to have my origin agent provide the origin Personal Property Shipping Office (PPSO), on Monday of each week (on the following day if Monday is a holiday), a report of all my shipments (except shipments in Storage in Transit (SIT)) on hand which were picked up before the previous Wednesday. The report will reflect the date, the member's/employee's name, the Personal Property Government Bill of Lading (PPGBL) numbers, pickup date, carrier code, RDD, and Required Port Delivery Date (RPDD) (for Code J UB shipments). Negative reports are not required.

E. Termination of Shipment. I understand that a shipment may be terminated at any time by the PPSO. Such termination will not constitute a diversion. The point of termination will become the destination point, and all rates and charges will be computed accordingly.

F. Pickup at or Delivery to a Military Terminal. When I have been notified that an entire shipment is available for pickup at a military terminal (air or surface), I will pick up the shipment as soon as possible, but not later than one workday for military air terminals and not later than five working days for military water terminals from date of receipt of notification. If the shipment is not removed within that period, the terminal TO has the option of charging storage IAW the rate tender beginning on the second or sixth day, and/or terminating the PPGBL and issuing a new PPGBL for onward movement by the same or a different mode/method of transportation. Upon delivery of a shipment to a military air or ocean terminal, I agree to provide the terminal TO with a memorandum copy of the PPGBL describing the shipment.

G. Use of an Alternate Carrier. When I accept a shipment and find that because of unavoidable circumstances I am unable to physically transport the shipment, I may, upon approval of the origin PPSO, arrange with another DOD-approved carrier to perform the required services. In such case, I will inform the PPSO of the name of the carrier to whom the shipment has been transferred. I will continue to be shown on the PPGBL as the initial carrier and will accept through responsibility from time of pickup at origin to delivery at destination.

H. Shipment In-Transit Visibility (ITV). I agree to provide ITV as described in Chapter 410, Specialized Procedures.

I. Tracing Shipments. I shall trace a shipment or missing items upon request from a TO or the member/employee and agree to acknowledge such a request and make a prompt report to the requester as to the location of the shipment within 24 hours for domestic shipments and 120 hours for international shipments

J. SIT. SIT at origin or delivery into storage at destination will be made only after approval of the responsible PPSO/Personal Property Processing Office designated representative. I will

assume full responsibility for arranging for placement of the shipment in a DOD-approved storage facility. I will indicate the net or gross weight for each shipment from SIT on the DD Form 619, Statement of Accessorial Services Performed.

K. Weighing of Shipments. I will weigh all shipments IAW the rate solicitation. For Code J UB shipments moving to Air Mobility Command (AMC) aerial ports, I will provide the actual weight and cube to the TO no later than three working days after pickup of the shipment. Invoices submitted for payment will reflect the weight of each shipment as prescribed therein. When professional books, papers, and equipment (PBP&E) (also known as PRO or PRO-Gear), are included as part of the shipment, the weight of such articles will be annotated separately on the PPGBL; weight may be obtained using bathroom or platform-type scales. In the event scales are not readily available, a constructive weight of 40 pounds per cubic foot may be used for PBP&E. When a constructive weight is used for PBP&E, the symbol (C) will be inserted by the carrier/agent after the weight to indicate a constructed weight was used. Shipments may be weighed on certified platform or warehouse scale prior to loading for transportation or subsequent to unloading. I agree to reweigh a shipment upon request of the origin or destination PPSO and further agree to mail the destination PPSO a legible copy of the weight tickets as soon as possible, but not later than 14 workdays after the reweighing has been performed. If a reweigh is required, the shipment will be reweighed, whenever possible, before being placed in SIT. When a shipment is reweighed and the weight recorded is less than the net or gross weight secured at the initial weighing, I agree to invoice the Government on the lower of the two net or gross weights at the time of initial submission of SF 1112, Public Voucher for Transportation Charges. In the event the reweigh information is not available at the time of my initial submission, I will adjust supplemental billings to reflect the reduced charges or voluntarily submit a refund based upon the new weight obtained.

L. Removal of Property from Facilities Disapproved by the TO/PPSO. When my facilities or the facilities of my agent are disapproved for further use, and it is considered necessary by the TO/PPSO to remove the personal property to prevent damage or contamination, I will immediately remove the property to a DOD-approved warehouse. The costs of such removal will be at no expense to the Government or the member/employee.

M. Loss or Damage. I will exercise care to prevent loss or damage of personal property in the process of packing and will properly and amply protect personal property in my possession. Smoking will not be allowed within 10 feet of member's/employee's personal property.

N. Loss or Damage/Inconvenience Claims.

1. Claims for Loss or Damage. I agree to pay, decline, or make a firm settlement offer in writing to the claimant within 120 days after receipt thereof. If the denial of any claim is based on an exception sheet, such will be provided the claimant along with any other evidence pertaining to the value of the claim. If the claim is not settled within the 120-day period, I will, at that time and at the expiration of each succeeding 30-day period while the claim remains pending, advise the claimant in writing of the status of the claim and the reasons for delay in making final disposition. I will request an extension from the claimant in writing. If the Government is the claimant, I understand that the Government claims office can proceed to collect the claim by administrative offset, if it is not settled within 120 days of receipt or within

an agreed extension time. I will report to the origin TO the final action taken, including date and total amount of the settlement.

2. Inconvenience Claims.

a. I hereby reaffirm that it is my responsibility to pickup and deliver personal property shipments on the agreed date. My failure to do so can cause serious inconvenience to the DOD members/employees and family, and can result in the expenditure of funds by the member/employee for lodging, food, rental/purchase of household necessities, and directly related miscellaneous expenses.

b. I agree to acknowledge receipt of an inconvenience claim filed by a member/employee or a TO within 15 calendar days from the date of receipt. I further agree to reimburse the member/employee within 30 days from receipt for out-of-pocket expenses limited to the items specified in Part II, Paragraph N.2.c. and other items needed by a member/employee while awaiting the delivery of his or her household goods which result from my failure to offer the shipment for delivery on or before the RDD as stated on the Government Bill of Lading (GBL) or correction notice thereof. I am not liable for these costs if the delay was caused by acts of God, acts of the public enemy, acts of the Government, acts of the public authority, violent strikes, mob interference, or delays of Code 5 or Code J shipments, caused by the Government and my negligence did not contribute to the delay. My maximum liability for lodging will not exceed the per diem lodging rate, based on the number of people in the member's/employee's family, e.g., the member/employee and spouse would be expected to share one room in a hotel; additional family members, depending on age and sex, may require additional rooms. My maximum liability for meals and incidental expenses will be the Meals and Incidental Expenses rate for the member/employee and each family member. The member/employee shall document the claim fully with an itemized list of charges and accompanying receipts for charges incurred. Charges shall be computed from the day after the RDD specified on the PPGBL as the RDD or GBL correction notice thereof or the date following the day the member/employee obtains quarters, whichever date is the latest, and will be payable through the day of actual delivery of the shipment.

c. Expenses: Out-of-pocket expenses are all expenses incurred by a member/employee and their family members because they are not able to use the items in the shipment or to establish his or her household. Expenses include but are not limited to, lodging, meals, laundry service, furniture and/or appliance rental, to include rental of a television or other similar expenses such as towels (two per person), pots, pans, paper plates, plastic knives, plastic spoons, plastic forks, paper and/or plastic cups, and napkins. A request for reimbursement of alcoholic beverages in any quantity is prohibited.

(1) I agree to pay the member/employee within 30 calendar days of the submission date and will report to the destination TO, with a copy to HQ MTMC, ATTN: MTPP-HQ, of the final action taken, to include the date and total amount of settlement. In the event of a disputed claim, I may, within the 45-day period of receipt of the claim, appeal the case to the destination TO. Every effort will be made to resolve the dispute. However, should I disagree with the decision of the TO, I may appeal the case to HQ MTMC. I understand the decision of HQ MTMC is final and the claim must be settled within a total of 75 days of the submission date.

Failure to acknowledge and/or settle a valid inconvenience claim may be cause for my company to be disqualified from participation with the DOD. Additionally, I understand that should I fail to settle a valid inconvenience claim, set-off action will be taken against my company by the claims/finance office. I am not responsible for payment of an inconvenience claim when a shipment is ordered in SIT at destination, regardless of the RDD, unless the need for SIT is a direct result of my failure to effect delivery of the shipment by the RDD and the member/employee was officially ordered away from the area at the time delivery was available. I agree to reimburse the member/employee through the day prior to the member's/employee's departure from the area.

d. Strikes, Port Congestion, Fires, Pilferage, Vandalism, and Similar Incidents.

(1) In the event of incidents of major significance that produce significant loss, damage or delay resulting from strikes, port congestion, fires, pilferage, vandalism, and similar incidents, I will notify the destination TO and HQ MTMC by electrical transmission (TWX, TELEX, or electronic mail (E-mail)) of the incident not later than the first working day upon discovery. If the incident occurred en route to final destination, I will notify the TO responsible for the area where the incident occurred in addition to the destination TO. A copy of the electrical transmission will also be promptly mailed to the origin TO. In addition, I will provide the following information within 5 working days after the incident or discovery thereof, by electrical transmission (TWX, TELEX, or E-mail to HQ MTMC, ATTN: MTPP-HQ, Falls Church VA 22041-5050, the origin and destination TO and the TO responsible for the area where incident occurred.

(a) Type of incident.

(b) Location of incident.

(c) Last name, first name, middle initial, grade, Service/Agency, and social security account number of shipper.

(d) PPGBL number and date issued.

(e) Code of service.

(f) Origin TO.

(g) Destination TO.

(h) Date shipment received by carrier.

(i) RDD.

(j) Date and time of incident or discovery thereof.

(k) Amount of loss and extent of damage.

(l) Current status of shipment(s), including new estimated time of arrival (ETA).

(m) Name of vessel or flight and tail number of aircraft.

(n) Location of the shipment(s) (i.e., port and pier location) and date vessel arrived or warehouse location or air terminal, plus the container owner's name and serial number of sea container.

(2) I will furnish addressees reports of significant changes in the status of shipments, as they occur, by electrical transmission TWX, TELEX, or E-mail. An after action report which provides a final assessment of the loss or damage incurred, the delays encountered, and the final disposition of the personal property shipments involved may be mailed to addressees.

O. Statement of Accessorial Services Performed. My representative will prepare a DD Form 619, itemizing accessorial services performed and furnish the member/employee or agent a copy when such services are required and separately charged. Each household appliance serviced will be identified to show the make, model, or the name of the manufacturer. An invoice supporting the type of service performed must support appliances serviced by a third party. No accessorial services will be billed when such services are included in single factor rates.

P. Inspection by PPSOs. The services and manner of handling personal property are subject to inspection and acceptance by the PPSO or PPSO's authorized representative.

Q. Substitute Documents in Lieu of Lost Personal Property Government Bill of Lading (SF 1203). If the original PPGBL is lost or destroyed, I shall forward the freight waybill (SF1205) to the finance center for payment. Duplicate or reproduced copies of SF1205 are not acceptable. If both the original PPGBL, SF 1203, and the freight waybill, SF1205, are lost, I shall request and be provided a certified true copy of the issuing office's copy for use as a substitute billing document. If the GBL is Transportation Operation Personal Property Standard System generated, a certified copy of the SF 1203 may be obtained from the origin TO as a substitute billing document. If the original copy of the PPGBL is located and made available to me before settlement is made, I shall return the certified copy to the issuing office. If the original PPGBL is found after settlement, I shall forward the bill to the appropriate issuing office for proper voiding.

R. Billing Procedures. For services rendered, I agree to bill the military Service/Agency finance office responsible for payment of the transportation charges IAW procedures disseminated by the Commander, MTMC. For shipments that are diverted or reconsigned IAW rate tariff/tender, I agree to submit with the SF 1113, Public Voucher for Transportation Charges, the original Diversion Certificate, signed by the requesting PPSO, authenticating the diversion or reconsignment. Valuation charges will be identified separately from all other charges on billing documents. All billing must be supported by documents.

PART III - PERFORMANCE REQUIREMENTS

A. Pickup and Delivery Dates.

1. When a shipment is accepted at origin, I agree to meet the specified pickup date and shall deliver the shipment on or before the RDD as stated on the PPGBL. For Code J and DPM UB shipments moving to AMC aerial ports, I will deliver the shipment to the AMC aerial port on the RPDD as specified in Block 25 (for Code J) or Block 18 (for DPM) of the PPGBL. Actual weights and cubes will be provided to the origin TO/PPSO within three working days of the shipment pickup. Port agents must provide Transportation Control and Movement Document (TCMD) data on a computer diskette(s) to the origin AMC terminal with delivery of the shipment. Pickup must be performed by the carrier's local agent with transfer to a linehaul van at the carrier's origin terminal facility. Shipments must not be scheduled by the carrier or the TO for pickup or delivery on Saturdays, Sundays, US holidays or foreign national holidays unless there is a mutual agreement between the member/employee, the TO, and the carrier. The origin TO must not establish an RDD on Saturdays, Sundays, US holidays, or foreign national holidays. I agree that I must not begin pickup or delivery at the member's/employee's residence before 0800 hours or after 1700 hours without prior approval of the TO or the member/employee. I further agree that I must not begin any service that will not allow completion by 2100 hours without prior approval of the TO or the member/employee.

2. Direct Delivery. If the member/employee requests direct delivery and furnishes a delivery address which is annotated on the GBL, I agree to meet that direct delivery on the RDD. If shipment arrives prior to the RDD, I shall not be eligible for storage cost. I may refuse direct delivery shipments without penalty.

3. Pre-Move Survey

a. I agree to perform residence pre-move surveys on domestic shipments estimated at 4,700 pounds or more, and/or international shipments estimated at 3,200 pounds or more, at origin points within a 50-mile radius of my nearest agent facility. I understand this requirement will apply to only those shipments on which I am provided a minimum of five working days advance notice of the pickup date requirement. I further understand the TO may waive this requirement if a pre-move survey is not requested by the member/employee and/or if the TO determines this service to be unnecessary or impractical.

b. I agree that telephone contact pre-move surveys will be made, as a minimum, for shipments of lesser weights than indicated above, or for shipments with origin points exceeding 50 miles of my nearest agent facility.

4. I agree, upon receipt of the three copies of the TCMD from the origin shipping office, to fill in blocks 22, 23, and 24 with the actual pieces, weight, and cube data. If for some reason obtaining actual data will delay transmission of TCMDs beyond the specified transmission time frames, an estimated weight and cube data is authorized on personal property shipments from commercial vendors. When estimated data are used, the pieces field must be annotated with "EEEE". Upon providing this actual or estimated information to the origin shipping office, I agree not to move the shipment until a release is issued by the origin shipping office. Upon receiving the release, I will place one copy of the TCMD in a waterproof pouch (marked for the outloading air and water terminal) on the number one container, present a copy to the receiving office at the air or water terminal, and retain a copy for my own use.

5. For all shipments entering the Defense Transportation System through a DOD operated aerial or water port, I agree to prepare and apply Military Shipping Labels IAW the instructions in Paragraph 403 C of this Regulation.

6. I agree to notify the destination TO of the arrival of containerized shipments within one workday after arrival at my agent's facilities. In addition, I will effect delivery-out services as follows:

a. For shipments which arrive before the RDD, I agree to deliver to the member/employee or member's/employee's agent within five working days from the date of notification by the PPSO, if agreed upon by the member/employee or member's/employee's agent. If the RDD falls within the five working days, I agree to deliver no later than the RDD.

b. For those shipments which arrive after the RDD, I agree to deliver IAW the TO's instructions.

7. When I know for any reason it will be impossible for me to have the shipment at destination on or before the RDD, I will notify both the origin and destination TOs at the earliest practicable time, advising the last known location of the shipment and furnishing an estimate of the delay expected beyond the RDD. The medium of communication to be utilized in notifying the TO will ensure that the notification reaches the destination TO before expiration of the RDD. As a minimum, the following information will be provided:

a. Last name, first name, grade of the member/employee.

b. Origin and destination of the shipment.

c. RDD.

d. Last known location of the shipment.

e. Cause for delay.

f. New ETA.

8. When a shipment arrives at the destination on a normal workday, I agree to notify the TO before delivery/attempted delivery of HHG to the residence IAW the instructions specified on the PPGBL. In the event the shipment arrives at the destination on a weekend or holiday, I may contact the member/employee to ascertain if delivery can be made. If the member/employee can accept the shipment, I will obtain approval of the destination TO or staff duty officer or, in the case of an Air Force installation, the duty officer, and will advise the TO of delivery on the next workday. In the event the delivery cannot be accomplished, I agree that only the Government-approved storage facility receiving the shipment for SIT will request approval for SIT.

9. When a shipment is scheduled for pickup from the residence or for delivery out of SIT to the residence, I agree to provide information on the afternoon preceding scheduled pick up as to whether the service will be performed in the morning (0800 to 1200) or in the afternoon (1200-1700) of the following day. This data will be based upon the best information available and will

be provided upon telephone request of the TO or the member/employee. This provision does not apply when direct delivery was authorized by the origin TO or when delivery can be arranged upon arrival of the linehaul van in the destination area.

B. Preparation of Articles.

1. All articles having surfaces liable to damage by scratching, marring, soiling, or chafing will be wrapped at time of loading at residence in textile or paper furniture pads, covers (other than burlap), or other acceptable wrapping materials. When storage of these articles is necessary, they will be afforded the same protection against damage.

2. Items of unusual nature such as, but not limited to, wall units, water beds, grandfather clocks, hot tubs, pool tables, pipe organs and satellite dishes may require special service by a third party. This third party service (to include disassembly/assembly) will be approved by the TO. Payment for the services of a third party will be IAW the Rate Solicitation.

3. I agree to disassemble at point of origin all items of personal property which, in the judgment of the carrier, require disassembly to ensure safe delivery at destination, except swing sets, other playground equipment, television and radio antennas, and similar articles. Items disassembled by the carrier will be shown in the remarks section of the household goods descriptive inventory form as disassembled by carrier (CD). Items disassembled by the member/employee will be shown in the remarks section as disassembled by owner (DBO). Carrier labor charges or third party service for the disassembly/assembly will be approved by the TO.

4. All nuts, bolts, screws, small hardware, and other fasteners removed from articles by the carrier in the preparation for shipment will be placed in a “parts box” which will be given an “Inventory Item No.” with a description of article contained within.

5. Legs or other articles removed from furniture will be properly wrapped, bundled together, and identified, e.g., dining room table legs, six each, and listed as a separate item on the inventory.

6. I am not required to remove/place property from/in an attic, crawl space or similar storage area and am not required to go into areas that:

a. Are not accessible by a permanent stairway (does not include ladders of any type);

b. Are not adequately lighted;

c. Do not have a finished floor; or

d. Do not allow a person to stand erect.

C. Containers. I agree to use the best commercial practices in selecting containers to safeguard movement of personal property, except where containers are required to meet specific military specifications.

D. Carrier Personnel. I will use only personnel qualified in their assigned duties in handling of personal property. When any of my personnel appears to be under the influence of alcohol or drugs or uses abusive language, I will replace said individual(s) when requested by the TO or the TO's designated representative. I will not use prison labor in the movement of personal property belonging to members/employees of the DOD.

E. Packing Requirements.

1. Packing. All packing will be accomplished IAW provisions of this section. The carrier is liable and responsible for all packing. The carrier has the responsibility to inspect all prepacked goods to ascertain the contents, condition of the contents, and that only articles not otherwise prohibited by the carrier's tariff/tender are contained in the shipment. Furthermore, when the carrier determines that goods require repacking, such packing will be performed by the carrier. In all cases, the inventory will reflect carrier packed (CP) with the carrier entitled to bill for the total charges for each container on the inventory subject to the limitations of MAXPAK.

2. Materials. All materials referred to in this Chapter shall be new or in sound condition. The use of damp, wet, or unclean packing materials is prohibited. If the material is not new, all marks pertaining to any previous shipment will be completely obliterated, and all material will be free of any substance injurious to the articles being packed or to the owner. New material must be used for packaging mattresses, box springs, linens, bedding, and clothing. Cubic measurements will be indicated in a conspicuous location on all carrier-packed containers.

3. Boxes. Wood or fiberboard boxes used will be as follows: wood cleated fiberboard, wood cleated plywood, nailed wood, corrugated fiber, or solid fiber boxes. Boxes may be made of lumber, plywood, or solid fiber and will be well manufactured and free from imperfections which may affect their utility. Size and spacing of nails will be IAW the best commercial practice. All unclenched nails will be either cement-coated or chemically etched.

4. Cartons. Cartons of solid or corrugated fiberboard may be used for packing linens, books, bedding, lampshades, draperies, or other similar articles. After packing, cartons must be glued or sealed by taping lengthwise at the joint on top and bottom. The side walls and ends of the corrugated or solid fiber cartons will be of a minimum average bursting strength of 200 pounds per square inch. The inside dimensions of the carton, length, width, and depth totaled, will not exceed 75 inches, with a weight limitation of 65 pounds. All corrugated and fiberboard cartons shall be stamped with a manufacturer's certificate indicating the name of manufacturer, bursting strength, minimum combined weight of facings, size limit, gross weight limit, and information indicating type of carton (single wall, double wall, etc.). Cartons lacking a certification are not authorized for use on personal property shipments. Egg crates, fruit or vegetable crates, tea crates, and similar-type boxes will not be used. Wooden crates may be used instead of cartons when the TO determines that their use is necessary to assure protection and safe transportation of the articles.

5. Barrels, Fiber Drums, and Cartons. Wood barrels, fiber drums, or cartons with a capacity of not less than five cubic feet (not applicable under all inclusive rates) are to be used for packing glassware, chinaware, bric-a-brac, table lamp bases, and other fragile articles. When the packing of fragile items has been completed and space is left in a dish pack, such space may be used for

packing other light items. These containers will not contain more than 120 pounds and will have a side wall bursting strength of a minimum average of 350 pounds per square inch. Corrugated containers may be used instead of barrel or drum-type containers. The side walls and ends of the containers will be of a minimum bursting strength of 350 pounds per square inch. Not more than 120 pounds of material will be packed therein. The sum of the interior horizontal and vertical girths will be not less than 157 inches for wooden barrels, fiber drums, or other drum-type containers. The cube of corrugated containers will be determined by actual measurements. All barrels or fiber drums will be securely headed and marked "This End Up."

6. Fiberboard Container. When fiberboard containers are used for TGBL, HHG Domestic/International shipments, they must, as a minimum, meet requirements of Federal Specification, American Society for Testing and Materials (ASTM)- D5118/D5118M-95 Standard Practice for Fabrication of Fiberboard Shipping Boxes and to be weather resistant class. Fiberboard containers, which exceed a gross of 15 cubic feet and 300 pounds, must be secured to a four-way entry wooden pallet. Fiberboard containers, unless specifically approved, must not exceed 96 cubic feet. This does not apply for UB shipments.

7. Filler Material. Good quality wood excelsior pads, wood wool excelsior pads, shredded paper pads, cellulose (bubble pack, etc.) cushioning material, fiberboard, corrugated fiberboard, unicellular polypropylene foam, unprinted newsprint, or kraft paper will be used as a filler.

8. Padding. New and good quality used-wood excelsior pads, unicellular polypropylene foam, shredded paper pads, or other equally suitable material will be used when required.

9. Wrapping. Wrapping paper or unicellular polypropylene foam will be new, clean, and appropriate for the purposes intended. Each item of silverware, silver ornamentation, or brass that is not coated to prevent tarnishing will be completely wrapped in unicellular polypropylene foam or nontarnish tissue paper.

10. Paper, Waxed or Treated. All waxed paper used will be manila wax or equivalent. Treated paper may be used if it is "butcher" type paper.

11. Unicellular Polypropylene Foam. All unicellular polypropylene foam wrapping material will be new, clean, and will conform to Federal Specification PPP-C-1797.

F. Manner of Packing.

1. All packing by the carrier will be performed in a manner requiring the least cubic measurement, producing packages that will withstand normal movement without damage to container or contents, and at a minimum of weight. Further, the number and weight of containers will not be greater than necessary to accomplish efficient movement. At the member's/employee's request, articles such as stereo type equipment will be packed in original containers by the carrier, when furnished by the member/employee, provided the containers are considered in good condition for shipping purposes.

2. Books. Books will be placed in cartons. All books of similar size will be inserted between rows and packed tightly, wedged with pads or paper if necessary to fill out the carton and prevent chafing. Books normally will be packed not more than two rows high in a carton.

3. Chinaware, Glassware, Crockery, Lamps, Clocks, Jardinières, Statuary, Vases, and Bric-a-Brac. Use of clean type or other modern method (not requiring the use of excelsior or shredded paper) of packing is required for the packing of glassware, chinaware, bric-a-brac, table lamp bases, and other fragile articles.

4. Electrical Equipment-Stereo Components, Fans, Heaters, Portable Stoves, Sunlamps, and Like Items. When it is necessary to protect electrical equipment for safe transportation or SIT, such equipment will be completely wrapped in paper or unicellular polypropylene foam and packed in a carton with enough padding to provide insulation necessary to prevent contact of one article with another and to eliminate movement of any article in the container. When packing in a carton is not necessary, the items will be properly wrapped and padded for protection.

5. Kitchenware. All kitchenware will be packed and padded into cartons.

6. Linens, Clothing, Draperies, and Like Items. Small, lightweight, unbreakable items, e.g., clothing items, certain linens, items already in drawers, may remain in drawers instead of being removed and packed. (Lightweight items being defined as those of lightweight and normally kept in drawers.) When not considered as safe for carriage in drawers, chests, dressers, trunks, etc., these and similar items will be packed carefully into regular cartons that will be properly sealed at residence. Clothing normally on hangers in closets and draperies will be packed in wardrobes subject to the following:

a. Upright wardrobes will be used for Code 1 shipments. (Exception: for final linehaul delivery out of nontemporary storage, the wardrobe used for storage is acceptable and no transfer is necessary.)

b. Flat wardrobes will be used for all containerized shipments, except when upright wardrobes are requested by the member/employee.

c. Hangers will be removed from clothing packed in flat wardrobes.

7. Mirrors, Pictures, and Paintings (Glass-Faced or Other Than Glass-Faced Paintings), Glass or Stone Table Tops, and Similar Fragile Articles Requiring Crating or Similar Protection. These articles will be wrapped and packed in a crate or a fiberboard carton. When more than one article is packed in any one crate or carton, a divider will be provided. No more than four articles will be packed in any one crate or fiberboard carton. Stone table tops will be packed separately. Small pictures, paintings, mirrors, and other similar articles of this type will be packed in cartons and will be properly sealed at residence. I understand that, prior to performing crating services for shipments moving in domestic Codes 1 and 2, I will obtain authorization from the TO. I further understand that crating authorization is not required for shipments moving in International Through Government Bills of Lading Codes 4, 5, 6, or T and 7, 8, or J, since packing and crating services are included in the transportation single factor rate.

8. Lampshades, Ornaments, and Toys. All lampshades, ornaments, small toys, and other small items easily crushed will be wrapped and placed in cartons and will be insulated from the carton walls and from other items. Lampshades will be wrapped individually with new paper or new unicellular polypropylene foam, placed in cartons, and cushioned to prevent shifting or damage.

9. Mattresses. Mattresses will be placed in new mattress cartons at the residence and sealed with tape. All cartons used will have a minimum average bursting strength of 200 pounds per square inch.

10. Rugs. Rugs and rug pads will be properly rolled (not folded) for shipment and will not be subsequently folded or bent to an extent that may cause damage to the rug.

11. Appliances. Each appliance serviced will be labeled to indicate that it must be serviced at destination before use (reversing the process performed at origin).

12. Washers. Washers requiring servicing will be secured with washer kits, washer packs, washer locks or special plastic inserts. The use of sheet fiberboard/cardboard is prohibited.

13. Surfaces. All finished surfaces will be protected so as to prevent scratching or marring.

14. Bicycles--For Containerized Shipments. When shipped as a separate item, bicycles shall be packaged and packed in the following manner: The handle bar shall be loosened, lowered, turned at a right angle from their usual position, swung downward and retightened. Wheels or mechanisms shall not be removed or disassembled from the frame. Pedals shall be removed and secured on edge forward of the seat post or above the back fender. Before placement into the carton, the bicycle will be wrapped with protective wrapping and padding. Empty areas in the container will be filled to prevent shifting or movement during transit. The container must be constructed or fabricated in a manner that will accept the bicycle without removal of the front or rear wheel assemblies.

G. SIT. In addition to the packing requirements contained in this tender for preparing personal property for transportation, when a shipment is placed in SIT in the CONUS, I agree to the following:

1. Storage. When a shipment is placed into SIT, the warehouseman shall have until the close of business of the third working day following the date the SIT control number is issued to complete the handling-in services. Personal property shall be stored on skids, dunnage, pallet bases, elevated platforms, or similar storage aids maintaining a minimum of at least two inches clearance from the floor to the bottom portion of the stored property. This elevation requirement shall apply after the three day handling-in period. Items waiting for the completion of the handling-in services shall be protected at all times. In addition, the property shall not be stored in contact with exterior walls. Trash cans, extension ladders, lawn mowers, TV antennas, swing sets, and other like items are excluded from this requirement.

2. Shipping Containers. The contents of containerized shipments will not be removed from containers when placed in SIT.

3. Identification. All lots of loose HHG, Code 1, nontemporary storage lots, and noncontainerized household and UB shipments shall be properly identified. Proper identification shall consist of member's/employee's name, PPGBL number, and SIT control number. Such identification shall be in plain view on each lot. HHG (Codes 4, 5, and T) and UB (Codes 7, 8, and J) are exempt from this requirement. However, containers for these codes shall be stored with pertinent information already on the container in plain view.

4. Rugs and Carpets. Rugs and carpets will be stored on racks in a horizontal position without folding any portion of the rug, carpet, or padding.

5. Upholstered or Overstuffed Furniture.

a. Items stored loose on racks will be placed in an upright (normal) position and covered or protected against dust. No boxes, cartons, or other items will be placed upon this type furniture.

b. When items are placed in individual room storage or when containers are employed for warehouse storage, they will have protection, padding, blocking, and bracing to preclude damage from any pressure against the upholstery, including pressure from its own weight as well as from conditions external to the container.

H. Preparation of Inventory. Preparation of the inventory will be in the same manner of and in compliance with the requirements set forth in Part III, Paragraph P of this tender. An automated inventory may be used if completed at the place of pickup as long as the data are recorded, and copies provided. The inventory of the shipment will bear the signature of the member/employee, the member's/employee's agent, or the TO, together with the signature of my representative certifying to its accuracy and completeness.

I. Split Shipments. If it is necessary to split a shipment for the linehaul movement, the established RDD applies to all parts of the shipment. A separate inventory for Code 1 shipments will be prepared for overflow items, one copy dispatched immediately to the origin TO and one copy to the member/employee at time of delivery.

J. Quality Control Program. I agree to establish within my company a quality control system that will provide total visibility of all facets of the program and ensure the service provided is equal to or greater than the standards of service established by HQ MTMC. This system will include, but not be limited to, specific subsystems for the functions of traffic management (routing, tracing, and billing), packaging, employee training and supervision, and agent supervision. I will provide MTMC detailed descriptions of this quality control system, on request, to the home office of my company during normal business hours.

K. Condition of Vehicles and Containers. The interiors of vehicles and containers used to transport personal property will be clean and will be provided with clean pads, covers and other protective equipment to ensure safe transit and delivery of personal property. Vehicles and containers will be maintained to assure that they are free from holes or other conditions which could permit the entry of water, and that doors, when closed, fit tightly and securely.

L. Tailgate Loading. I understand that, unless approved by the PPSO, personal property will not be loaded onto tailgates of motor vans. When tailgate loading is approved, the load will not extend beyond the sides or end of the tailgate or above the top of the exterior surface of the vehicle.

M. Removal of Debris. Packing and loading at origin will include removing from the member's/employee's premises all empty carrier-provided containers, packing materials and other debris accumulated incident to packing and loading.

N. Documents Provided the TO. As soon as possible, but not later than seven workdays after the date of receipt of shipment as indicated in item seven on the PPGBL or receipt of the PPGBL, whichever is the later, I shall furnish the origin TO the following:

1. One memorandum copy of the PPGBL annotated with the gross, tare, and net weights. For containerized shipments, I will also indicate the total number of containers and the gross cube of the shipment.

2. One copy of DD Form 619 itemizing the accessorial services performed at origin.

3. One legible copy of the HHG descriptive inventory.

4. One legible copy of the weight tickets signed by the person performing the weighing and must contain the information required by the domestic and international rate solicitations. If the shipment is to be delivered prior to the submission of the aforementioned documents, the origin TO will be advised of the weight of the shipment by telephone or other means prior to delivery.

5. In addition, I will provide the actual weight and cube to the origin TO/PPSO within three working days of the shipment pickup.

6. Documents to be provided to the Origin AMC Aerial Port. Port agent/contractor must provide TCMD data on a computer diskette(s) to the origin AMC terminal with the delivery of the shipment.

O. Documents Provided the Member/Employee.

1. At the time of pickup, I shall furnish the member/employee or the member's/employee's agent:

a. Consignee's memorandum copy of the PPGBL (SF 1203/1203B).

b. A legible copy of the Household Goods Descriptive Inventory.

c. One legible copy of DD Form 619 (if applicable). Exception: For shipments originating from nontemporary storage, I will furnish the member/employee the consignee's memorandum copy of the PPGBL, a legible copy of the Household Goods Descriptive Inventory, and a legible copy of the DD Form 619 (if applicable) at the time of delivery to the residence at the destination. When such shipments require SIT at destination, I will furnish the destination TO the member's/employee's copy of each of the above documents at the time SIT is authorized.

2. At the time of delivery, I shall furnish the member/employee or the member's/employee's agent:

a. A legible copy of the DD Form 619-1 if SIT, reweigh services, or other accessorial services are performed en route or at destination.

b. Three copies of the DD Form 1840 with recorded damage/loss identified on the form, as applicable.

P. Inventory. I agree to:

1. Prepare an accurate, legible Household Goods Descriptive Inventory (Figure B-2), (automated inventories or similar documents which provide equal or better information are acceptable) in coordination with the member/employee or the member's/employee's agent. When the carrier packs an article in the original container, the inventory will indicate the type of article and will be shown as "CP", packed by the carrier.

2. Use extreme care in listing articles of furniture and packing containers.

3. Identify containers by type and cube with an indication of general contents, e.g., linens, pots, and pans, etc., two cubic ft.

4. Avoid the use of words such as "household goods" or other general descriptive terms in the preparation of the inventory.

5. List and describe item(s) of property to the extent necessary to properly identify it (them).

6. Ensure that my representative will use diligence to record any unusual conditions and that special care will be exercised to ensure that the inventory reflects the true condition of the property. The "Exception Symbols" and "Location Symbols," as shown on the Household Goods Descriptive Inventory (Figure B-2) will be used to describe the conditions, such as marred, scratched, soiled, worn, torn, gouged, and the like. If the condition of any article contained in the shipment is such that the use of one or more exception symbols is unnecessary, the omission of these symbols will indicate good condition except for normal wear.

7. Ensure that the terms "Pro-Gear," for professional books, papers, and/or equipment or "consumable items" shall be used to identify such articles on the inventory, together with the cube and weight of the container; a line entry item for each container; e.g., carton PB 6 cubic ft., 150 lbs. These items identified by the member/employee will be separated from other items of the shipment, weighed separately, and placed in separate boxes or cartons to provide safe transportation. The weight of the Pro-Gear and consumables shall be inserted in Block 28 of the PPGBL. When it is impossible or impractical to weigh the Pro-Gear or consumables, a constructive weight, based on 40 pounds per cubic foot, shall be used.

8. List on the inventory the general contents of dressers or chests of drawers, packed by the carriers.

9. Mopeds and motorcycles will be annotated on the inventory as one line item listing the serial number, make, and odometer reading.

10. Each privately owned firearm will be annotated on the inventory by make, model, caliber or gauge, and serial number.

11. Annotate the inventory to show any overage, shortage, and damage found, including visible damage to external shipping containers each time custody of the property changes from a carrier to a storage contractor, from a storage contractor (warehouse man) to a carrier or from one carrier to another.

12. For shipments moving in door-to-door container service, if the TO permits the carrier to partially containerize a shipment at the warehouse, each item removed from the residence will be annotated on the inventory as containerized at warehouse (CW).

13. Secure from the storage contractor two legible copies of the nontemporary storage inventory and I will, in conjunction with the storage contractor, check each item of the storage lot IAW with such inventory. If, at the time each item is checked, there is a difference in condition of the item from that listed on the nontemporary storage inventory, I will prepare an Exception Sheet, and such differing conditions will be noted thereon. When I elect to make a new inventory, differences as to condition of individual items, as compared with the nontemporary storage inventory, will be shown on an exception sheet as described above. In the event the opinions of my driver and storage contractor's representative differ as to shortages/overages or condition of an item(s), both opinions will be listed on my exception sheet and separately identified as to source. Both parties will sign and date the Exception Sheet, each retaining a legible copy for their respective files. Such Exception Sheet will remain an internal industry document. In the event a claim is filed with the military activity, I will provide legible copies of the Exception Sheet, if any, to the concerned claims officer.

14. Indicate on inventories prepared on shipments released from nontemporary storage the same article identification and item number as on the nontemporary storage inventory or make a cross-reference on the new inventory indicating the item number and identification from the nontemporary storage inventory (Figure B-2, CR reference column). The use of legible photo reproductions of the storage contractor's inventory instead of preparing a new inventory is permissible.

15. Use the same inventory prepared at origin to verify delivery at destination.

16. Identify personal property by affixing a tag or tape to each article (not applicable to individual items in packing containers). Each shipment will be separately identified by lot and each article will be assigned a number that must correspond with the item number shown on the inventory form. The type of identification used and the method of affixing it to the article will be such as not to damage any article so identified.

17. Identify items dissembled by the member/employee at origin and record such items in the remarks section of the Household Goods Descriptive Inventory form.

18. Identify items disassembled or serviced by the carrier at origin and record such items in the remarks section of the Household Goods Descriptive Inventory form.

19. The term "miscellaneous" or its abbreviation "misc" shall only be used to describe the contents of containers when the total items in a container are too numerous to list on the carton or inventory line item and then only if the room or area from which packed is identified; i.e.

"misc-youths room." If such a description is used, I agree not to contest a claim for missing items related to the nature of such cartons.

Q. Unethical Acts. I agree that the TOSSS is signed with knowledge of the law that whoever, in any matter within the jurisdiction of any department or agency of the United States, knowingly and willfully:

1. Falsifies, conceals, or covers up by any trick, scheme, or device, a material fact; or

2. Makes any false, fictitious, or fraudulent statements, or representation; or

3. Makes or uses any false writing or document knowing the same to contain any false, fictitious, or fraudulent statement or entry will be subject to the provisions of this tender and the penalties prescribed in the criminal law of the United States, i.e., 18 U.S.C. § 1001, Statements or Entries Generally.

R. Unloading and Unpacking at Destination. Unloading at destination will include the one-time laying of rugs and the one-time placement of furniture and like items in the appropriate room of the dwelling or a room designated by the member/employee. All articles disassembled by the carrier or originating from nontemporary storage will be reassembled. On a one-time basis, all barrels, boxes, cartons, and/or crates will be unpacked and the contents will be placed in a room designated by the member/employee. This includes the placement of articles in cabinets, cupboards, or on shelving in the kitchen when convenient and consistent with safety of the article(s) and proximity of the area desired by the member/employee, but does not include arranging the articles in a manner desired by the member/employee. The unpacking service and removal of debris will be performed at the time the goods are delivered to the residence unless specifically waived in writing by the member/employee or member's/employee's agent. The waiver will be held in my files for further reference.

S. Recording Damage and Loss. I shall record damage/loss revealed while unloading and/or unpacking. When unloading and/or unpacking articles at the destination residence, I shall, in coordination with the member/employee or the member's/employee's authorized agent, inspect each article for damage and check the inventory against possible loss of or damage to articles. A record will be made of any difference in count and condition from that shown on the inventory prepared at origin, and such record will be jointly signed by my representative and the member/employee or the member's/employee's authorized agent. Such record or count and condition will be indicated on the inventory form and DD Form 1840/1840R, as applicable, and copies will be furnished to the member/employee or the member's/employee's authorized agent. In case of missing items, tracer action will be initiated immediately and the PPSO and member/employee will be advised in writing of the results within 30 days from the date of delivery of the shipment. Every effort will be made to locate missing articles/items before recommending the submission of a claim by the member/employee. I agree, provided claims action has not been initiated, to forward to the member/employee by expedited means, missing articles/items when located, at no additional cost to the Government or the member/employee. In the event articles/items are located subsequent to claims action by the member/employee and/or the Government, I shall hold the articles/items at the point of location, notify the destination PPSO, and await disposition instructions. When articles/items are returned to the

member/employee, any claims, which have been paid in favor of the member/employee, shall be readjusted in my favor.

PART IV - CERTIFICATION

A. Violation of Tender of Service and/or Rate Solicitation. Any substantial violation of this tender, or failure to perform IAW rate solicitation/commercial tariff/rate tender and/or other legal requirements, may be used as the basis for suspension action by a TO. I also understand that the severity of violation and/or repeated violations of this tender, as determined by the Commander, MTMC, may be used as justification for immediate nonuse, disqualification, or termination of this Tender of Service, without which I am not permitted to participate in further DOD personal property traffic.

B. Effective Date. This Tender of Service will be effective on the date approved by the Commander, MTMC, and will be applicable to shipments of personal property which I accept for movement and servicing on PPGBLs, commercial bills of lading to be converted to PPGBLs, or purchase orders, and will form a part of the conditions thereof.

C. Terms and Conditions. This Paragraph pertains to the PPGBL, hereafter referred to as the Bill of Lading. It is mutually agreed and understood between the United States and Carriers, including Forwarders, who are parties to Bill of Lading that:

1. The Bill of Lading is governed by the regulation relating thereto as published in 41 CFR Part 101-41, Transportation Documentation and Audit, with special attention drawn to 41 CFR Part 102-118 Transportation Payment and Audit, and applicable Commercial Shipments Rules and Conditions.

2. Except as provided in 41 CFR 101 or as otherwise stated hereon, the Bill of Lading is also subject to the same rules and conditions as govern commercial shipments made on the usual forms provided therefore by the carrier.

3. All parties to the Bill of Lading (carriers, agents, freight forwarders, and others), recognize that this shipment is made under the auspices of the United States Government, agree to forego any liens that may arise from any cause whatsoever and not to detain or impound this shipment made on the usual forms provided therefore by the carrier.

4. The carrier shall in no way demand prepayment of charges nor make any collection of charges at time of delivery.

5. Interest shall accrue from the voucher payment date on overcharges made hereunder and paid at the same rate in effect on that date as published by the Secretary of the Treasury pursuant to the Debt Collection Act of 1982.

6. General instructions and administrative directions:

a. Continuation sheets of the prescribed should be used and attached hereto when space under "Description of Shipment" on the face of the Bill of Lading is inadequate.

b. Where accessorial or special services, such as exclusive use of a car or truck, expedited service, protective service, re-consignment, etc., are ordered incident to linehaul transportation, the Bill of Lading shall be endorsed to show the name of the carrier upon which the request was made and the kind and scope of the special services ordered. The endorsement may be placed on the face hereof under the "Description of Shipment" or under the "Remarks" if space is available, and shall be signed by or for the person who ordered the services. If such an endorsement is impractical, the same information may be set forth in a statement bearing the number of the covering Bill of Lading, which shall be signed by or for the person who ordered the services and, if possible, attached to the Bill of Lading. If the Bill of Lading is not available, the original and one copy of the statement shall be surrendered to the carrier from which the services were ordered, the original to be transmitted to the last linehaul carrier for presentation in connection with the bill for linehaul transportation charges. Where accessorial or special services are shown as ordered but were not furnished, the Bill of Lading shall be so annotated.

CERTIFICATE OF CARGO LIABILITY INSURANCE

THE FOLLOWING IS THE MINIMUM REQUIRED INSURANCE FOR CARRIERS/FORWARDERS:

	Amount Per Shipment	Amount Per Aggregate Losses/Damages at Any One Place and Time
DOMESTIC	$10,800	$150,000
INTERNATIONAL	$10,800	$150,000

INSTRUCTIONS (Type all information except signature)

1. a. NAME OF INSURANCE COMPANY	2. a. NAME OF HOUSEHOLD GOODS CARRIER/FORWARDER
1. b. ADDRESS (street number, city, state and zip code)	2. b. ADDRESS (street number, city, state and zip code)
3. SCAC 4. POLICY NUMBER	5. EFFECTIVE DATE (MM/DD/YY) (12:01 Eastern Standard Time and continuing until canceled as provided for in Paragraph "5" below)

6. THE INSURANCE COMPANY (HEREINAFTER REFERRED TO AS COMPANY) HEREBY CERTIFIES AND AGREES THIS POLICY PROVIDES FOR THE FOLLOWING:

	Amount Per Shipment	Amount Per Aggregate Losses/Damages at Any One Place and Time
DOMESTIC	$_____	$_____
INTERNATIONAL	$_____	$_____

Compensation for loss and/or damage to all property belonging to shippers or consignees and coming into the possession of the carrier in connection with its transportation service performed for the account of the Department of Defense (hereinafter referred to as DoD), regardless of whether the motor vehicles, terminals, warehouses, and other facilities used in connection with the transportation of such property are specifically described in the policy or not. The liability of the company extends to such losses and/or damage, whether or not occurring on the route(s) or in the territor(ies) authorized to be served by the carrier whenever the carrier may be legally liable.

No limitations in the policy, such as deductibles or coverage restrictions, shall be a valid defense for claims filed by shipper, consignees, or the DoD. If the carrier may be liable, the company may be liable. If the carrier cannot or does not handle a claim, the company assumes responsibility to see that the claim receives prompt attention, including the determination of the carrier's liability, and payment in full to the extent of the liability.

Lack of cooperation from the carrier for any reason (including carrier bankruptcy) is no defense. If necessary, the company shall seek from the claimant affidavits or other supporting documentation to permit a determination of liability.

When requested by the Commander, Military Traffic Management Command (hereinafter referred to as MTMC), the company will provide, within thirty (30) days, a duplicate original of said policy and all endorsements thereto. MTMC reserves the right to reject certificates of insurance from insurance companies if they fail to provide adequate protection.

This certificate may not be canceled without cancellation of such policy. Such cancellation or any material change may be effected company or the carrier only by giving thirty (30) days notice in writing to the Commander, Military Traffic Management Command Hoffman Building II, ATTN: MTPP-HQ, 200 Stovall Street Alexandria, VA 22332-5000. Such notice will commence to run from the date said notice is actually received at the office of MTMC.

Insurance and surety companies must be legally authorized to issue policies of cargo liability insurance in each state that the carrier is authorized to operate. The underwriter of cargo liability insurance must have a policyholder's rating of "A" or better in **Best's Insurance Guide**.

ISSUING OFFICE

7. a. NAME OF INSURANCE COMPANY/UNDERWRITER	8. a. NAME OF AUTHORIZED INSURANCE COMPANY REPRESENTATIVE
7. b. ADDRESS (street number, city, state and zip code) PHONE NO. (Area Code)	8. b. SIGNATURE DATE (MM/DD/YY)

MT-HQ FORM 49-R. MAY 88 EDITION OF JUL 85 IS OBSOLETE APPENDIX 4

Figure B-1. Certificate of Cargo Liability Insurance

HOUSEHOLD GOODS DESCRIPTIVE INVENTORY

TAG COLOR _____ NOS. _____ THRU _____

PAGE NO. NO. OF PAGES

CONTRACTOR OR CARRIER	AGENT	CARRIER'S REFERENCE NO.
OWNER'S GRADE OR RATING AND NAME		CONTRACT OR GBL NO.
ORIGIN LOADING ADDRESS	CITY STATE	GOVT. SERVICE ORDER NO.
DESTINATION		VAN NUMBER

DESCRIPTIVE SYMBOLS

CP - Packed By Carrier
PBO - Packed By Owner
CD - Carrier Disassembled
DBO - Disassembled by Owner
PB - Professional Books
PP - Professional Papers
PE - Professional Equipment
B&W - TV Black & White
C - TV Color
MCU - Mechanical Condition Unknown

EXCEPTION SYMBOLS

BE - Bent
BR - Broken
BU - Burned
CH - Chipped
CU - Contents and Condition Unknown
D - Dented
F - Faded
G - Gouged
L - Loose
M - Marred
MI - Mildew
MO - Motheaten
P - Peeling
R - Rubbed
RU - Rusted
SC - Scratched
SH - Short
SO - Soiled
ST - Stained
S - Stretched
T - Torn
W - Badly Worn
Z - Cracked

NOTE: The omission of these symbols indicates good condition.

LOCATION SYMBOLS

1. Arm
2. Bottom
3. Corner
4. Front
5. Left
6. Leg
7. Rear
8. Right
9. Side
10. Top
11. Veneer
12. Edge
13. Center
14. Seat
15. Drawer
16. Inside
17. Door
18. Shelf
19. Hardware

ITEM NO.	STG. CK./ CTL REF.	ARTICLES	CONDITION AT ORIGIN	ROOM	EXCEPTIONS (IF ANY) AT DESTINATION

REMARKS/EXCEPTIONS _____

IMPORTANT NOTICE → *BEFORE SIGNING — CHECK SHIPMENT, COUNT ITEMS AND DESCRIBE LOSS OR DAMAGE IN SPACE ON THE RIGHT ABOVE. IF FOR ANY REASON YOU WERE NOT GIVEN OPPORTUNITY TO INSPECT THIS SHIPMENT, YOU SHOULD CALL THIS TOLL FREE NUMBER, 800-348-3746.*

"WE HAVE CHECKED ALL THE ITEMS LISTED AND NUMBERED ON THIS PAGE INCLUSIVE AND ACKNOWLEDGE THAT THIS IS A TRUE AND COMPLETE LIST OF THE GOODS TENDERED AND OF THE STATE OF THE GOODS RECEIVED."

AT ORIGIN	LOADING HAULER NAME & NUMBER *(Signature)*	DATE	AT DESTI-NATION	DELIVERING HAULER NAME & NUMBER *(Signature)*	DATE
	OWNER OR AUTHORIZED AGENT *(Signature)*	DATE		OWNER OR AUTHORIZED AGENT *(Signature)*	DATE

FORM 14 (REV. 10/93) PRINTED IN U.S.A.

Figure B-2. Household Goods Descriptive Inventory

THIS PAGE INTENTIONALLY LEFT BLANK

APPENDIX C

LIST OF STATE, COMMONWEALTH, AND DISTRICT WEIGHTS AND MEASURES OFFICES OF THE UNITED STATES

This list of State, Commonwealth, and District Weights and Measures Offices provides the Transportation Offices (TOs) with the name, location, and telephone number of the responsible weights and measures offices having legal jurisdiction over Government and commercial scales. The following are the responsible offices for scale inspection, testing, and approval of weighmasters.

STATE	NAME, LOCATION, AND TELEPHONE NUMBER
NATIONAL INSTITUTE of STANDARDS	National Institute of Standards & Technology Office of Weights & Measures, 100 Bureau Drive, Stop 2350, Gaithersburg, MD 20899-2380, Telephone (301) 975 4004, Fax (301) 926 0647, e-mail owin@nist.gov.
ALABAMA	Weights & Measures Division, P.O. Box 3336, Montgomery, AL 36109-0336, Telephone (334) 240 7133, Fax (334) 240 7175, e-mail - alagi.wmo1@agri-ind.state.al.us.
ALASKA	Department of Transportation & Public Facilities, Division of Measurement Standards,12050 Industry Way, Bldg. O - Suite 6, Anchorage, AK 99515, Telephone (907) 345 7750 or (800) 478-7636, Fax (907) 345 6835, e-mail aves_thompson@dot.state.ak.us.
ARIZONA	Director, Department of Weights and Measures, 4425 West Olive, Suite 134, Glendale, AZ 85702, Telephone (602) 255 5211, Telephone (800) 277 6675, Fax (602) 255-1950, e-mail ckeith@wm.state.az.us.
ARKANSAS	Director, Bureau of Standards, 4608 West 61st Street, Little Rock, AR 72209, Telephone (501) 225 1598, Fax (501) 562 7605, e-mail HileM@aspb.state.ar.us.
CALIFORNIA	Chief, Division of Measurement Standards, 8500 Fruitridge Road, Sacramento, CA 95826, Telephone (916) 229 3000, Fax (916) 229 3026.
COLORADO	Chief, Measurement Standards Section, Colorado Department of Agriculture, 3125 Wyandot Street, Denver, CO 80211-3824, Telephone (303) 477 4220, Fax (303) 477 4248, e-mail Sandy.Spenard@ag.state.co.us.

CONNECTICUT	Director, Weights and Measures Division, Department of Consumer Protection, 165 Capitol Ave. Hartford, CT 06106, Telephone (860) 713 6160, e-mail food.standards@po.states.ct.us.
DELAWARE	Weights and Measures Administrator, Division of Consumer Protection, 2320 South Dupont Highway, Dover, DE 19901, Telephone (302) 739 4811, Fax (302) 697 6287.
DISTRICT OF COLUMBIA	Chief, Weights and Measures, Department of Consumer and Regulatory Affairs, Market Branch 1110 U Street, SE, Washington, DC 20020, Telephone (202) 767 7923.
FLORIDA	Chief, Bureau of Weights and Measures, 3125 Conner Blvd. - Lab 2, Tallahassee, FL 32399, Telephone (850) 488 9140, Fax (850) 922 6064, e-mail graym@doacs.state.fl.us.
GEORGIA	Assistant Commissioner, Fuel and Measures Division, Department of Agriculture, Agriculture Building, Capitol Square, Atlanta, GA 30334, Telephone (404) 656 3605, Fax (404) 656 9648, e-mail btruby@agr.state.ga.us.
HAWAII	Measure Standards Division Weights & Measures, P.O. Box 22179, Honolulu, HI 96823, Telephone (808) 973 9563, Fax (808) 973 9720, e-mail linda@poi.net.
IDAHO	Chief, Bureau of Weights and Measures, 2216 Kellogg Lane, Boise, ID 83712, Telephone (208) 332 8690, Fax (208) 334 2378.
ILLINOIS	Weights and Measures Program Manager, Department of Agriculture, Division of Plant Industries and Consumer Services, State Fairgrounds, P.0. Box 19281, 801 E. Sangamon Ave., Springfield, IL 62794-9281, Telephone (217) 785 8301, Fax (217) 524 7801, e-mail scolbrook@agr.state.il.us.
INDIANA	Administrator, Weights and Measures Program, Division of Retail Consumer Affairs, 2525 N. Shadeland Ave., Indianapolis, IN 46219, Telephone (317) 356 7078, Fax (317) 233 8131.
IOWA	Chief, Weights and Measures Bureau, Iowa Department of Agriculture and Land Stewardship, Henry A. Wallace Building, Des Moines, IA 50319, Telephone (515) 281 5716, Fax (515) 281 6800, e-mail Darryl.Brown@idals.state.ia.us.

KANSAS	Office of Weights and Measures, Division of Inspections, P.O. Box 1928, Topeka, KS 66619-2570, Telephone (785) 862 2415, Fax (785) 862 2460, e-mail ccotsora@kda.state.ks.us.
KENTUCKY	Director, Division of Weights and Measures, Department of Agriculture, 106 W. Second Street, Frankfurt, KY 40601, Telephone (502) 564 4870, Fax (502) 564 5669, e-mail lhatfield@mail.state.ky.us.
LOUISIANA	Office of Agro-Consumer Services, 5825 Florida Blvd, Baton Rouge, LA 70806-3098, Telephone (225) 925 3780, Fax (225) 922 0477.
MAINE	Division of Quality Assurance & Regulations, 28 State House Station, Augusta, ME 04333, Telephone (207) 287 2161, Fax (207) 287 5576, e-mail david.gagnon@state.me.us.
MARYLAND	Program Manager, Weights and Measures Section, Maryland Department of Agriculture, 50 Harry S. Truman Parkway, Annapolis, MD 21401, Telephone (410) 841 5790, Fax (410) 841 2765, e-mail strauble@mda.state.md.us.
MASSACHUSETTS	Director of Standards, Executive Office of Consumer Affairs, Division of Standards, One Ashburton Place, Boston, MA 02108, Telephone (617) 727 3480, Fax (617) 727 5705.
MICHIGAN	Senior Food Specialist, Weights and Measures, Michigan Department of Agriculture, 940 Venture, Willianston, MI 48895, Telephone (517) 655 8202, Ext 312, Fax (517) 655 8303, e-mail mercerp@state.mi.us.
MINNESOTA	Director, Weights and Measures Division, Department of Public Service, 2277 Highway 36, Roseville, MN 55113, Telephone (612) 296 6711, e-mail mblacik@dpsv.state.mn.us.
MISSISSIPPI	Director, Weights and Measures Division, Department of Agriculture and Commerce, P.0. Box 1609, Jackson, MS 39215-1609, Telephone (601) 359 1111, Fax (601) 359 1175, e-mail julie@mdac.state.ms.us.
MISSOURI	Supervisor, Device and Commodity Inspection, Division of Weights and Measures, 1616 Missouri Blvd, Jefferson City, MO 65102-0630, Telephone (573) 751 4316, Fax (573) 751 0281.

MONTANA	Administrator, Public Safety Division, 1424 9th Avenue, Helena, MT 59620, Telephone (406) 444 3164, Fax (406) 444 4305, e-mail jkane@state.mt.us.
NEBRASKA	Director, Weights and Measures, Box 94757, 301 Centennial Mall South, Lincoln, NE 68509, Telephone (402) 471 4292, Fax (402) 471 3252, e-mail - stevenam@agr.state.ne.us.
NEVADA	Director of Business and Industry, Weights and Measures Section, 2150 Frazier Avenue, Sparks, Nevada, 89431, Telephone (775) 688 1166, Fax (775) 688 2533, e-mail stevenam@agr.state.ne.us.
NEW HAMPSHIRE	Commissioner, New Hampshire Department of Agriculture, P.O. Box 2042, Concord, NH 03302-2042, Telephone (603) 271 3351, Fax (603) 271 1109.
NEW JERSEY	State Superintendent, Division of Weights and Measures, Department of Law and Public Safety, 1261 Routes 1 and 9 South, Avenel, NJ 07001, Telephone (732) 815 4840, Fax: (732) 382 5298.
NEW MEXICO	Director, Division of Standards and Consumer Services, New Mexico Department of Agriculture, P. 0. Box 30005, MSC 3170, Las Cruces, NM 88003-0005, Telephone (505) 646 1616, Fax (505) 646 2361, e-mail gwest@nmda-bubba.nmsu.edu.
NEW YORK	Weights and Measures Specialist III, Department of Agriculture and Markets, 1 Winners Circle, Albany, NY 12235, Telephone (518) 457 3146, Fax (518) 457 5693, e-mail Agmweigh@nysnet.net.
NORTH CAROLINA	Director, Standards Division, North Carolina Department of Agriculture, P.0. Box 27647, Department SD, Raleigh, NC 27611, Telephone (919) 733 3313, Fax (919) 715 0542, e-mail david_smith@ncdamail.agr.state.nc.us.
NORTH DAKOTA	North Dakota Public Service Commission, Dept. 408, 600 E Boulevard Ave. Bismarck, ND 58505-0480, Telephone (701) 328 2400, Fax (701) 328 2410, e-mail - sab@oracle.psc.state.nd.us.
OHIO	Chief, Division of Weights and Measures, Department of Agriculture, 8995 East Main St. Reynoldsburg, OH 43068, Telephone (614) 728 6290, Fax (614) 728 6424, e-mail - hubert@odant.agri.state.oh.us.

OKLAHOMA	Program Administrator, Weights and Measures Section, Agricultural Products Division, 2800 North Lincoln Boulevard, Oklahoma City, OK 73105-4298, Telephone (405) 521 3864, Fax (405) 522 4584.
OREGON	Administrator, Measurement Standards Division, Department of Agriculture, 635 Capitol Street, Salem, OR 97310-0110, Telephone (503) 986 4468, Fax (503) 986 4784, e-mail gshefche@oda.state.or.us.
PENNSYLVANIA	Director, Bureau of Standard Weights and Measures, Department of Agriculture, 2301 N. Cameron Street, Harrisburg, PA 17120, Telephone, (717) 787 9089, Fax (717) 783 4158.
RHODE ISLAND	Department of Labor and Mercantile, 610 Manton Ave., Providence, RI 02909, Telephone (401) 457 1867, Fax (401) 457 1893.
SOUTH CAROLINA	Commissioner, Consumer Services Division, Department of Agriculture, P.0. Box 11280, Columbia, SC 29211, Telephone (803) 737 9690, Fax (803) 737 9703, e-mail cfulmer@scda.state.sc.us.
SOUTH DAKOTA	Director, Division Commercial Inspection and Regulation, 118 West Capitol, Pierre, SD 57501-2080, Telephone (605) 773 3697, Fax (605) 773 6631.
TENNESSEE	Standards Administrator, Quality and Standards Division, Ellington Agriculture Center, P.O. 40627, Melrose Station, Nashville, TN 37204, Telephone (615) 837 5109, Fax (615) 837 5015, e-mail rwilliams2@mail.state.tn.us.
TEXAS	Chief, Weights/Measures Section, Department of Agriculture, P.0. Box 12847, Austin, TX 78711, Telephone (512) 463 7659, Fax (512) 463 8225, e-mail dslaydon@agr.stste.tx.us.
UTAH	Director, Weights and Measures, Department of Agriculture, P.O. Box 146500, Salt Lake City, UT 84116, Telephone (801) 538 7150, Fax (801) 538 7126, e-mail agmain.kstephen@state.ut.us.
VERMONT	Director, Division of Weights and Measures, Department of Agriculture, 116 State Street – Drawer 20, Montpelier, VT 05602, Telephone (802) 828 2361, Fax (802) 828 2361, e-mail brucem@agr.state.vt.us.

VIRGINIA	Program Manager, Office of Weights and Measures, Department of Agriculture and Consumer Services, P.0. Box 1163, Room 402, Richmond, VA 23218, Telephone (804) 786 2476, Fax (804) 786 1571.
WASHINGTON	Chief, Weights and Measures Section, Department of Agriculture, P.O. Box 42560, Olympia, WA 98504, Telephone (360) 902 1857, Fax (360) 902 2086, e-mail jbuendel@agr.wa.gov.
WEST VIRGINIA	Director, Weights and Measures Section, Department of Labor, 570 MacCorkle Ave., West, St Albans WV 25305, Telephone (304) 722 0602, Fax (304) 722 0605, e-mail anglek@mail.wvnet.edu.
WISCONSIN	Supervisor, Weights and Measures Technical Unit, Trade and Consumer Protection Division, Wisconsin Department of Agriculture, P.O. Box 7883, Madison, WI 53707, Telephone (608) 267 3510, Fax (608) 266 1560, e-mail porteaj@datcp.state.wi.us.
WYOMING	Weights and Measures Program Coordinator, Technical Services, Division of Standards and Consumer Services, 2219 Carey Avenue, Cheyenne, WY 82002, Telephone (307) 777 6590, Fax (307) 777 6593, e-mail jbigel@missc.state,wy.us.

APPENDIX D

PRE-AWARD SURVEY GUIDELINES

A. General. Portions of the Federal Acquisition Regulation (FAR) and supplements thereto, this Regulation, and DD Form 1811, Pre-award Survey of Contractor's/Carrier's Facility and Equipment (Figure 406-6) will be used when making pre-award surveys. Since it is not feasible to list all the criteria that makes a warehouse and its management satisfactory or unsatisfactory, the decision as to adequacy is a matter of judgment. The primary overall objectives to be considered involve the following questions: Will the warehouse afford proper protection to the property to be stored? Is the company capable of performing the required services properly? The contracting officer/Transportation Officer (TO) must be satisfied that the warehouse has adequate:

1. Protection from pilferage, contamination, theft, fire, flood, rain, moisture, windstorm, or other hazards. The contracting officer may request the advice and/or opinion of the law enforcement authority in determining the adequacy of a separate storage location for firearms.

2. Storage methods such as proper stacking, ventilation, locator systems, and access for fire fighting and inspection.

B. Structural Requirements. Facilities may be constructed of any modern building material normally used and generally accepted for the construction of warehouses, transportation terminals, and structures used for similar purposes. Materials may include, but are not limited to, brick, block, concrete, and rolled sheet metal, which are the most commonly used and accepted materials. As a minimum, the inspecting official must review the following areas during the on-site survey: construction, compliance with local building codes and ordinances, door and window closures, weather tightness, and adequacy of security procedures.

C. Environmental Requirements.

1. Facilities should be constructed or equipped with adequate devices which will reasonably ensure property will not be exposed to extreme heat, cold, moisture, high humidity, or other environmental conditions which would cause damage such as mold, mildew, and cracking or separation of finished and glued surfaces. Protective measures may include, but are not limited to, insulation, ventilators, ceiling and floor fans, dehumidifiers, and like devices that are intended to control or regulate the environment within a structure. The requirement for such built-in or external devices will be based on a review of the following factors: geographic location of the facility, weather conditions, previous experience, and incidences of damage claims for facilities within the same area which relate to mold, mildew, or articles which have deteriorated as a result of a climatic condition. Each facility will be evaluated on its own merits considering the above factors.

2. Inspecting officials should consult with local police, fire, and building departments when assessing a facility and further information is needed for approval. Warehouses constructed with exposed (bare), uninsulated metal walls and/or ceilings must provide a disinterested third party engineer's environment report certifying that the facility will provide stored household goods

(HHG) with protection from extreme heat, cold, moisture, humidity, or other environmental conditions which could produce mold, mildew, and cracking or separation of finished/glued surfaces.

D. Insect and Rodent Control. Warehouses must not show evidence of insect and/or rodent infestation. Warehousemen must have an established periodic program, either self-administered or provided by a reputable outside firm, for the control and extermination of insects and rodents. Warehousemen must keep records to confirm the existence of the program.

E. Housekeeping. One of the most important items in warehousing is good housekeeping. Survey personnel must assure themselves that there are provisions for the collection and disposal of packing materials, crates, and other similar trash; that excessive dust and dirt are not prevalent; that working supplies are properly located; and that equipment is maintained in a sound and orderly condition.

F. Repairs. Warehouses which require major repairs to afford proper protection of property will not be approved. Reinspections will be made only after the contracting officer/TO has been advised in writing by the contractor, carrier, or agent that repairs have been completed.

G. Responsible Management and Operation. Inspection records must contain evidence of good management and operational practices. Such evidence may be obtained through visual observation of the facility, equipment, and personnel and from information relating to credit standing and financial stability. Whenever a state or municipality requires a business firm to be licensed to operate a personal property storage warehouse, possession of such license must be verified. The determination that approved contractors continue to possess good management, financial stability, and operational practices must be accomplished at least annually by the contracting officer or TO. Additional information with respect to determining the responsibility of prospective contractors is contained in the FAR, Subchapter A, Part 9, Contractor Qualifications.

H. Fire Prevention and Protection.

1. Minimum fire protection standards are based upon fire protection systems, fire insurance rates, and other factors. Warehouses that do not meet these minimum standards must not be approved for participation in the program. For overseas areas fire protection and prevention, standards must be established by the theater commander. Fire risk classifications are as follows:

		Limitation (pounds)
CLASS 1	Fully automatic supervised sprinkler system.	1,500,000
CLASS 2	Fully automatic unsupervised sprinkler system.	1,000,000
CLASS 3	Supervised detection and reporting system.	600,000

NOTE: When the fire risk classification increases or decreases, the warehouse classification will be adjusted. The above class designations and weight limitations apply to basic ordering agreement (BOA) contract facilities only.

a. Fire protection systems must meet the requirement for insurance rate credit by the recognized fire insurance rating organization. Written evidence of the recognition of an installed fire protection system must be obtained by the contractor/agent from the cognizant fire insurance rating organization through the contractor's/agent's insurance company. Periodic inspection (annually as a minimum) by the TO/contracting officer must verify that the warehouseman is having the system properly maintained.

b. All classes of warehouses must have an adequate source of water for fire-fighting purposes and a responsive fire department. Adequacy of the water supply and fire department must be based upon statements by the fire insurance rating organization, municipal fire department, or local authority having jurisdiction.

c. Weight limitation pertains to a warehouse or a fire separation thereof.

d. The Headquarters, Military Traffic Management Command, is authorized to approve deviations from the above standards.

2. Even though a warehouse may fall within an approved fire risk classification, it must not be approved unless it meets all requirements of the BOA, Tender of Service, and this Regulation.

3. Warehouses will be approved and utilized in accordance with (IAW) the standards and provisions of national codes (American Insurance Association, National Fire Protection Association, American Standards Association, etc.) unless local codes are more rigorous with respect to fire prevention and protection requirements; minimum clearance above stacks; width of aisles; accessibility to fire aisles; distribution of fire extinguishers; and outside storage of combustible materials. IAW national codes, the contractor's storage area must be separated from other occupants of a jointly occupied building by a fire wall or partition having a fire resistance rating sufficient to protect the warehouse from the fire exposure of the other occupant. The minimum separation must be a solid wall or partition having a fire resistance rating of not less than one hour.

4. A warehouse operational layout fire plan is required as a part of the pre-award survey process. Additionally, all approved storage facilities must submit an initial and revised fire plan as outlined below. The layout fire plan must show the configuration of pallets or open-stack storage, racks, aisles, deck space, working areas, office space, etc. Respective dimensions inclusive of wall clearances must be shown. This layout fire plan will be reviewed on site and be signed and dated by a fire department official for approval. The approved layout fire plan must be sent to the Regional Storage Management Office (RSMO) Contracting Officer or TO for permanent retention in the contractor/carrier file. Thereafter any change to the operational characteristic of the warehouse must be reflected on a modified or revised layout fire plan, approved by on-site review, signed, and dated by a fire department official. The modified layout plan must be sent to the TO/contracting officer for retention. A copy of the current approved layout fire plan is to be posted in a prominent position within the warehouse to which it applies.

5. The pre-award survey must verify that:

a. HHG are not exposed to hazardous materials or operations inside or outside the warehouse.

b. “No Smoking” signs are conspicuously posted in all storage areas and that “no smoking” restrictions are rigidly enforced.

c. Waste and refuse are removed from storage areas daily and will be kept in metal containers with tight-fitting metal lids.

d. Aisles are kept free of storage and equipment.

e. HHG are stored on skids, dunnage, pallet bases, elevated platforms, or similar aids that provide a two inch minimum clearance from the floor to the bottom-most portion of the property stored and are not in contact with exterior walls. Trash cans, extension ladders, lawn mowers, TV antennas, swing sets, and other like items are excluded from these requirements.

f. The height of HHG stacked loose does not exceed 10 feet.

g. Heating, electrical, plumbing, and other systems are serviced annually (at a minimum), are maintained in sound condition, and meet all requirements of nationally recognized codes unless local codes or ordinances are more rigorous.

h. Power equipment such as sweepers, pallet jacks, and forklifts are operated and/or garaged IAW nationally recognized codes, unless local codes and standards are more rigorous.

i. Installed fire protection systems are serviced and maintained IAW nationally recognized codes, unless local codes are more rigorous, ensuring these systems are operational at all times. As a minimum, fire detection and reporting systems must be inspected every 30 days and sprinkler systems must be inspected every 90 days. A licensed or otherwise qualified, disinterested third party must perform the inspections.

j. Firearms are stored within a member’s/employee’s storage lot. In those instances where a firearm must be stored separately (i.e., prescribed by law, firearm is only item in storage, etc.), the adequacy of the security area must be approved in writing by local law enforcement authority and the contracting officer/TO.

I. Security. Security measures must conform to the following criteria; however, for overseas areas, the theater commander must establish security requirements.

1. Building. The walls and roof must be structurally sound, including windows, doors, and skylights.

2. Security Devices. Utilization of an electronic protection system is mandatory in areas identified by local law enforcement agencies as “high crime” rate areas. A burglar alarm system with AC/DC alternating power sources; or protective systems such as sound detectors, motion sensors, infrared beam sensors, and closed circuit television; is acceptable only when supervised

and monitored at a central station on a 24-hour basis. Additionally, the warehousemen must have a program for the periodic inspection and maintenance of these systems.

3. Windows and Doors. All access walk-in doors, warehouse doors, exterior windows, and overhead doors that may permit warehouse entry by simply breaking the glass therein, must require the installation of heavy metal mesh or "chain-link" type fence, or equal materials installed so that they cannot be readily removed from the exterior, or electronic devices that detect the opening and/or the breaking of glass. This requirement does not apply to windows, the base of which is considered to be above the reach of a reasonably determined burglar or vandal. Skylights, cupolas, and roof vents require the same security measures as windows. When lesser constructed doors (as opposed to heavy duty doors) are used, they must be reinforced with metal bars or steel overlay to defend against forced entry.

4. Locking Devices. All doors and access hatches must have a double locking system as a minimum. Electric controlled overhead doors, unlockable metal pins, or snap fasteners are not recognized locking devices and will not suffice as an alternative locking method. The door from the office to the warehouse storage area must also be secured with a double-lock system. A double-lock system is not required if the office is within the confines of the warehouse walls and the exterior office doors are double locked. When the warehouse office is not within the confines of the warehouse walls and has a door connecting the office area with warehouse area, a double-lock system is required. This locking system is required on the door permitting entry to the office or the door permitting entry to the storage area. The door with the double-lock system must be metal, solid wood, or reinforced as stated in Paragraph I.3 above. When the doors/access hatches are adequately protected by an electronic protection system as described in Paragraph I.1 above, only one keyed locking device is required.

5. Van Security. Van doors must be secured with heavy duty (case hardened) padlocks or surface key locks.

6. Exterior Area. Recommend heavy-duty fence and lights be used when and where possible to deter crime.

J. Subcontracting. When it is in the best interest of the Government, the contracting officer may approve subcontracting IAW the provisions of the FAR, Subchapter G, Part 44, Subcontracting Policies and Procedures, and this Regulation. Such approval will be confirmed in writing.

K. Operating Authority Requirements for Storage Contractors. The provisions of the FAR, Subchapter H, Part 52.247-2, Permits, Authorities, or Franchises, must be met for qualification in the DOD Personal Property Shipment and Storage Program. A prospective contractor engaged in interstate transportation must be responsible for obtaining a Certificate of Public Convenience and Necessity from the United States Department of Transportation or, if engaged in intrastate transportation, a certificate issued by the state regulatory body. In those instances where certain states recognize leasing and/or agency agreements to perform drayage services as an alternative to intrastate operating authority, the prospective contractor must be responsible for furnishing such evidence of compliance with state law.

L. Evaluation of Flood Hazards. Prior to final approval, a flood plain report from the United States Army Corps of Engineers or disinterested third party engineer/surveyor is required to determine if the prospective contractor's facility is in a potential 100-year flood area. Buildings with floor levels below the flood plain levels must not be approved.

M. Other Considerations.

1. During pre-award surveys, it must be determined if the adjoining occupant is engaged in an operation that is hazardous or nonhazardous to the facility being surveyed. For example, does the adjoining occupant use, store, or manufacture any materials, which would be prohibited in a personal property storage facility? Under nonhazardous conditions, the minimum separation must be a solid wall or partition having a fire resistance rating of not less than one hour. When the adjoining occupant is engaged in a hazardous operation, a judgment must be made as to whether or not the hazard is of such a nature that entry or continued participation in the personal property program must be prohibited.

2. A common problem is the garaging and/or repair/maintenance of vehicles in warehouses. In view of the hazards associated with this practice, contractors, carriers, and agents are not permitted to house or perform maintenance on a vehicle within the part of a structure used for the storage of personal property unless the storage/maintenance area is properly separated from the personal property storage area by walls having the National Fire Code prescribed degree of fire resistance. However, POVs may be stored in the facility without fire wall separation if properly serviced, i.e., gas drained and battery disconnected with the terminals taped. If the vehicle will remain in storage over one year, the battery must be removed.

N. Temporary Approval of Storage In Transit (SIT) Warehouses. The RSMO Contracting Officer may grant temporary approval when the following conditions have been met.

1. A written formal request from the local TO is submitted to the RSMO stating that there is a critical need for storage space or other justification for temporary approval of a SIT facility. In any case it must be in the best interest of the Government and not the best interest of the contractor.

2. Inspection by the local TO after permission is granted by the RSMO Contracting Officer.

3. Preparation of DD Form 1811 (Figure 406-6) and DD Form 1812 (Figure 402-2) by the local TO. Both Forms must be forwarded to the RSMO.

4. Prior to granting temporary approval, the contractor/agent must have submitted to the RSMO and have approved all required documentation for warehouse approval. In addition all warehouse deficiencies must be corrected.

5. The RSMO Contracting Officer will issue a letter to the contractor and the TO granting temporary approval.

6. Permanent approval will be granted after inspection by the RSMO at a future date. In the event the RSMO finds any warehouse deficiencies, the RSMO will suspend temporary approval until such time as all deficiencies are corrected.

APPENDIX E

WAREHOUSE INSPECTION GUIDE AND INSTRUCTIONS FOR PREPARATION OF THE WAREHOUSE INSPECTION REPORT (DD FORM 1812)

A. General. This Appendix provides information and guidance regarding the on-site inspection of commercial carrier, agent, and contractor warehouses approved for the storage of personal property shipments. This information supplements the criteria outlined in Appendix D, Pre-award Survey Guidelines, and must be used as a checklist when performing quarterly, semiannual, and other routine facility inspections. Activities located outside the Continental United States, excluding Alaska and Hawaii, may deviate from the procedures outlined herein when the theater commander or other designated authority has established facility standards to comply with localized practices, trade, and customs.

1. When an inspection results in the disqualification of a facility, the disqualification must apply for all Transportation Offices (TOs) using the same facility. Regional Storage Management Offices (RSMO)/Personal Property Shipping Offices (PPSO) may inspect storage facilities at their discretion. Any action taken by the PPSO, such as disqualification or reinstatement of a facility, must be reported to the RSMO.

2. The DD 1812, Warehouse Inspection Report (Figure 402-2) is to be utilized when performing the inspections. Modern warehousing and storage facilities incorporate various techniques and methods to provide the storage and related services contracted for under the Basic Ordering Agreement (BOA), Tender of Service, and/or rate solicitation. The inspecting official must evaluate numerous areas to ensure that the facility complies with the requirements of the contract or tender and the stored property is afforded adequate levels of protection in a safe environment. Each facility inspection must be preplanned to achieve maximum results. During the pretrip planning, the inspection official must review previous inspection findings, reports on service failures, customer complaints, claim letters, and other general information. These and related areas can be discussed with a management official of the company during or after the inspection process.

B. General Inspection Procedures. A technique to be followed during on-site inspections is outlined below.

1. On approach to the warehouse, note general activity, status of yard operations, and evidence of security measures.

2. At the warehouse, contact a management official, advise them of the purpose of visit, and set forth procedures of the inspection.

3. As a minimum, the inspection and evaluation process must include a review of the following areas:

a. Fire detection and reporting systems.

b. Security systems.

c. Structural and electrical systems.

d. Storage methods and practices.

e. Locator and lot identification systems.

f. Documents to include household goods descriptive inventories, weight tickets, and warehouse receipt.

C. Specific Inspection Areas. During the inspection process, it is recommended that the inspection official:

1. Open a selected storage lot to observe packaging, marking and stacking methods (nontemporary storage (NTS) inspections only).

2. Check locator system accuracy by randomly selecting storage lots and crosschecking the information contained in the locator system with the actual location of the property in the warehouse.

3. Review segregated item storage practices for articles such as rugs, sofas, and pianos.

4. Circle outside of the warehouse doing checks for fire hazards and security conditions. Combustible materials stored outside should be kept a minimum of 20 feet from the building. Due to the proximity of adjoining buildings, property lines and similar circumstances, this may not be practicable in all areas. Therefore, the inspector should exercise sound judgment in applying this standard.

5. Observe worker activity to include operations associated with the handling in and out of shipments.

6. Check truck and platform scales to ensure they have been inspected in accordance with state, county, or city codes.

7. Check to verify that maintenance inspections of fire safety systems are performed. As a minimum, fire detection and reporting systems must be inspected monthly and sprinkler systems quarterly.

8. Check to verify that an insect and rodent control program, either self-administered or provided by an outside firm, is in effect.

D. Inspection Report. Upon completion of the inspection, a DD Form 1812 must be executed pursuant to the instructions contained in Paragraph E below. The contractor, carrier, or agent must also be given an oral briefing on the deficiencies noted and a suggested course of action for correction that will meet standards.

E. Instructions for Preparation of the DD 1812. A written report of all inspections must be made on a DD Form 1812 and maintained as part of the contractor, carrier, or agent file. The DD Form 1812 will be prepared as indicated below:

1. The type of inspection will reflect the type of inspection being performed: storage-in-transit (SIT), BOA, or both. The PPSO will check the TO block when independent inspections are performed, whereas the RSMO inspectors will check the RSMO block. For joint inspections (TO/RSMO), the first block indicating both BOA and SIT will be checked.

2. The actual date on which the inspection is performed will be entered.

3. The name and address of the contractor or carrier must reflect the present name and address of the company operating the facility for SIT and/or BOA storage.

4. The address of the actual location of the warehouse.

5. The total number of NTS lots in storage and weight in storage.

6. The block for the fire system/class must be checked.

7. The current status of the warehouse must be checked: active, inactive or ineligible.

8. The contract reference number applies only to RSMO inspection of BOA-approved storage facilities.

9. Section 8: Pre- and Post Storage Services. All deficiencies and violations listed in this section must be based on inspections by the TO or RSMO inspecting official in connection with pre-storage and post-storage services. When violations are observed and recorded in this section for lots which are in NTS under the BOA, the TO must forward a copy of the report to the RSMO contracting officer within 10 working days of inspection.

10. Sections 9 through 12. These sections separate the inspection areas by categories and subcategories, which are to be evaluated during the inspection process. Each subcategory is also listed in the Guide to Severity of Deficiencies. References should be made to the BOA, Tender of Service, or rate solicitation and numerical quality control rating. All subcategories listed must be checked and assigned a quality control rating when deficiencies are observed. For subcategories which do not have a cross-reference to the BOA or Tender of Service, commercial warehousing principles, as established by the American Warehousing Association, National Fire Protection Association, and similar authorities are accepted. The inspecting official may assign a lower or higher point value (not to exceed three) depending on the severity of the deficiency.

11. Section 13: Deficiencies Observed/Actions Taken. This section is for the assignment of a quality control rating and is designed for the inspecting official to apply a suitable numerical rating to the facility. Based on the findings noted, the inspecting official may indicate any necessary actions to be taken by the contractor, carrier, or agent.

12. Section 18: Remarks Section. This section is used to provide a narrative description of the deficiencies observed and record other information relative to the inspection. NOTE: In addition to items on the DD Form 1812, inspectors will also ensure the availability of barcode MSL capability by installed equipment or a contract capability.

13. Section 16 and 17: Signature Blocks. The DD Form 1812 must be signed by the inspecting official and a representative of the contractor carrier or agent at the time of inspection and prior to distribution of the form.

F. Upon completion of the inspection process, the facility must be rated based on the type and severity of discrepancies observed. Ratings must be awarded as follows:

1. "A" rating. This rating is assigned when no deficiencies are observed. No further action is necessary.

2. "B" rating. This rating is assigned when the observed deficiencies are minor and are easily correctable. The contractor, carrier, or agent must be requested to perform immediate corrective action.

3. "C" rating. This rating is assigned when deficiencies are observed; however, they do not warrant declaring the contractor, carrier or agent ineligible for further business. The contractor must be required to provide a written detailed report of corrective action taken, signed by a company official, within 10 days after the inspection. The facility must be closely monitored by both the RSMO and TO for any future signs of deterioration in the quality of service. During the next regular inspection, if the contractor, carrier or agent has falsely reported a corrective action or repeated a violation previously called to their attention, grounds exist for immediately placing the facility in a state of ineligibility or nonuse. HQ MTMC MTPP-HP will be advised of this action.

4. "D" rating. This rating is assigned when the observed deficiencies merit a quality control rating score of "D" (17 points and over) or items marked by an asterisk are considered of sufficient importance to warrant declaring the contractor, carrier, or agent ineligible or in nonuse status for further business. The inspecting official must immediately place the contractor, carrier, or agent in a temporary state of ineligibility or disqualify the facility for business pending corrective action. The contractor, carrier, or agent must be required to explain action taken and provide a written report of corrective action prior to the facility being reinspected. The TO/RSMO may reinstate the facility when deficiencies have been corrected, evidence provided, and positive action taken to preclude recurrence.

5. "E" rating. A repeat violation of a serious deficiency or evidence of false reporting of corrective actions must merit a quality control rating score of "E" and will be grounds for continuation of the state of ineligibility or disqualification for a period set by the contracting officer or TO. When the contracting officer determines an "E" rating is not sufficient, then a "Stop Notice" for future NTS business will be issued or action taken to terminate the contractor for default. Also this information will be used by a TO to disqualify the facility of a carrier or a carrier's agent.

G. Distribution. The DD Form 1812 must be completed in triplicate and distributed, as indicated below, after the inspecting official and contractor, carrier or agent have signed the completed form:

1. The original is placed in the RSMO contract file or TO file.

2. A copy is furnished to the contractor, carrier, or agent at the time of inspection.

3. When the inspection is performed by a RSMO contracting officer, a copy is provided to the TO. When the inspection is performed independently by a TO and the facility inspected participates in the NTS program, and deficiencies are observed and recorded, a copy must be provided to the RSMO. When a TO/RSMO has assumed the inspection responsibilities for facilities used by other TOs, a copy of all inspection reports must be provided to each user activity within 10 working days from the date of inspection.

GUIDE TO SEVERITY OF DEFICIENCIES

Technical Area	Quality Control Point Rating
1. PRE- AND POST-STORAGE SERVICES	
A. Unauthorized equipment in use	1
B. Unauthorized cartons and packaging used	1
C. Improper packing/sealing/marking of cartons	1
D. Pickup service not accomplished on time	1
E. Improper loading/unloading of van or pallet	1
F. Disassembled parts not packaged/inventoried	1
G. Inventory stickers on finished surfaces	1
H. Improper appliance servicing/labeling	1
I. Smoking observed at residence	1
J. Employees on duty not efficient/neat	1
K. Origin premises not left in good order	1
L. Destination services improperly performed	1
M. Deviations to service order	1
N. Delivery service not accomplished on time	1
2. ADMINISTRATION	
A. Incorrect inventory preparation	1
B. No separate weight ticket and certificate/PB and E/WT	1
C. Incorrect warehouse receipt preparation	1
D. Ineffective locator system*	3
E. Contract supporting paperwork needed	1
3. STORAGE METHODS & OPERATION	
A. Consigned lots not stored within five days*	2
B. Improper storage, stacks/pallets	2
C. Finished surfaces not protected by pads/wrap	2
D. Lots and separated pieces not elevated two inches	2
E. Lots stored against exterior walls	1
F. Lawnmowers not stored at base level of lot	1
G. Improper firearms control	2
H. Loose stack storage over 10 feet*	2
I. PBO contents not identified on inventory	1
J. Improper storage of upholstered pieces*	2
K. Improper storage of rugs/pads*	2
L. Improper piano/organ storage	1
M. Improper storage of mattresses	1
N. Segregated items not properly identified	2
O. Improper packing of mirrors/glass table tops	1
P. Inadequate protection against mold/mildew	2

GUIDE TO SEVERITY OF DEFICIENCIES (CONT'D)

Technical Area		Quality Control Point Rating
Q.	Aisles being used to process goods in/out	1
R.	Previous discrepancies not corrected*	3
4.	FIRE PREVENTION AND HOUSEKEEPING	
A.	Electric/heat/water systems require repair	1
B.	Evidence of smoking in warehouse*	3
C.	Unauthorized items stored*	3
D.	Improper aisle and/or stacking clearance	1
E.	No fire system inspection*	3
F.	No fire extinguisher inspection	3
G.	No extinguishers on warehouse equipment	2
H.	Trash/debris in storage area	2
I.	Fire doors inoperable/in need of repair	3
J.	No fire plan posted	1
K.	Space heaters/extension cords being used	1
L.	Gas and oil not drained from motorized items	3
M.	Hazards noted within 50 feet of warehouse*	2
N.	Flammables/combustibles found in warehouse*	2
5.	WAREHOUSE PRACTICES	
A.	Inadequate security*	3
B.	Inadequate loading/unloading area	1
C.	Structural deficiencies (doors/floors/roof/walls/windows)	3
D.	Inadequate protection from sun/dust/heat/cold/moisture	2
E.	Lack of insect/rodent control	2
F.	Vehicles parked in storage area	3
G.	Commingled storage with undesirable commodities	2
H.	Multiple occupancy*	3
I.	Weight stored in excess of authorized limit*	2

* When those items followed by an asterisk are observed, the inspecting official must consider placing the facility in an ineligible or disqualified status immediately. The facility must not be removed from this status until the deficiencies have been corrected and verified by an on-site inspection. When the TO, at the request of a RSMO, verifies that the deficiencies have been satisfactorily corrected, the facility will be removed from disqualified or ineligible status.

THIS PAGE INTENTIONALLY LEFT BLANK

APPENDIX F

VEHICLE PROCESSING CENTERS (VPCs) FOR SHIPPING – RECEIVING PRIVATELY-OWNED VEHICLES (POVs)

A. This Appendix provides information on VPCs for POV shipping. It also provides a list of VPCs located in the Continental United States (CONUS) and outside the Continental United States (OCONUS) for the purpose of turn-in and pickup of POVs.

B. POVs must be booked to the water port of embarkation and debarkation serving the member's/employee's ultimate duty station. Such movements may include land transit segments as authorized by regulation.

C. The member/employee must be advised of the required delivery date (RDD) assigned to the POV shipment. If the member/employee elects an origin or destination VPC that extends the RDD, the impact will be explained to the member/employee.

D. When making excess cost determinations, the designated CONUS/OCONUS VPC within the intent of the Joint Federal Travel Regulations, Paragraph U5410, Transportation, and the Joint Travel Regulations, Paragraph C11004, Authority, is the CONUS/OCONUS VPC nearest the old or new duty station or a CONUS/OCONUS VPC between the old or new duty station. Excess cost only must be charged in those cases when the actual transportation cost to be incurred by the Government exceeds the cost of transporting a POV between the CONUS/OCONUS VPC geographically closest to the member's/employee's old duty station and the VPC geographically closest to the member's/employee's new duty station, or to or from any CONUS/OCONUS VPC between the old and new duty stations.

E. When the Government has incurred excess transportation costs, collection of such costs must be made in accordance with regulations of the Service/Agency concerned.

F. VPC information, to include directions and hours of operation for specific VPCs can be found on MTMC web site http://www.whereismypov.com/.

G. Refer to the Personal Property Consignment Guide (PPCIG), Volume II for specific instructions on overseas areas with POV restrictions. The PPCIG has a separate Chapter on all countries. Information can be found on MTMC web site http://pweb.eta.mtmc.army.mil/ppcig/index.htm.

CONUS VEHICLE PROCESSING CENTERS (VPCs)

Atlanta, GA VPC (2579 Campbell Blvd, Ellenwood, GA Telephone (800) 965 9155)

Baltimore, MD VPC (2501 Broening Highway, Baltimore, MD Telephone (800) 631 5751)

Charleston, SC VPC (1599 Oceanic St., Charleston, SC, Telephone (800) 747 9223)

Dallas, TX VPC (617 East Main St., Lewisville, TX, Telephone (800) 438 2046)

Los Angeles, CA VPC (23803 S. Wilmington Avenue, Carson, CA Telephone (800) 887 3344)

Metro NY/NJ VPC (301 Supor Boulevard, Harrison, NJ, Telephone (877) 269 3702)

New Orleans, LA VPC (5481 Crowder Blvd, New Orleans, LA, Telephone (800) 721 9632)

Orlando, FL VPC (1934 McCoy Road, Orlando, FL, Telephone (800) 758 5998)

Portsmouth, VA VPC (3015 Airline Blvd, Portsmouth, VA, Telephone (800) 810 7480)

Richmond CA VPC (1301 Canal St., Richmond, CA, Telephone (800) 704 2444)

Seattle, WA VPC (2302 Ross Way, Tacoma, WA, Telephone (800) 597 1833)

St. Louis, MO VPC (4236 Crescent Drive, Pontoon Beach, IL, Telephone (800) 275 3706)

OCONUS VEHICLE PROCESSING CENTERS (VPCs)

Alaska VPC (Anchorage VPC, 2945 Mountain View Drive, Anchorage, AK, Telephone (907) 297 1133)

(Fairbanks VPC, 904 Aurora Drive, Fairbanks, AK Telephone (907) 451 1753)

Belgium VPC (CDR 80th ASG, Base Aerienne, 7050 Chievres, Belgium, Telephone 800#: 00 800 87267227)

England VPC (Lakenheath/Mildenhall VPC, Brandon Vehicle Processing Center, London Road Industrial Estate, 40 Wimbledon Avenue, Brandon, Suffolk IP26, Telephone 800#: 800 87267227)

Germany VPC (Baumholder VPC, Gebaeude 8716, Raum 13, Smith Barracks Am Bahnof/ Bldg 8724, 55774 Baumholder, Germany, Telephone 800#: 00 800 87267227)

(Boeblingen VPC, Panzer Kaserne, Bldg 2930, 71032 Boeblingen, Germany, Telephone 800#: 00 800 87267227)

(Grafenwoehr VPC, US Grafenwoehr Base, Saratoga Ave/Bldg 515, 92655 Grafenwoehr, Germany,
Telephone 800#: 00 800 87267227)

(Kaiserslautern VPC, Kapaun Air Station, Bldg 2806, 67661 Kaiserslautern, Germany, Telephone 800#: 00 800 87267227)

(Mannheim VPC, Taylor Barracks, Bldg 348, 68309 Mannheim, Germany, Telephone 800#: 00 800 87267227)

(Schweinfurt VPC, Conn Barracks, Custer Street/Bldg 35, 97421 Schweinfurt, Germany, Telephone 800#: 00 800 87267227)

(Spangdahlem VPC, Spangdahlem Air Base, Bldg 193A, 54529 Spangdahlem, Germany, Telephone 800#: 00 800 87267227)

(Wiesbaden VPC, Mainz Kastel Housing Area, Bldg 7513, 55252 Mainz Kastel, Germany, Telephone 800#: 00 800 87267227)

Guam VPC (Bldg 3179, COMNAVMAR Naval Base, Santa Rita, Guam, Telephone 800#: 877 716 7702)

Hawaii VPC (Matson Honolulu Terminal, Sand Island Parkway, Pier 51-B, Honolulu, HI, Telephone 800#: 800-896-7745)

Italy VPC (Aviano VPC, Via Ellero 1, Zona Industrial, 33081 Aviano, Italy, Telephone 800#: 800 053388 (in Italy))

(La Maddalena VPC Personal Property Shipping Office, US Naval Support Activity Telephone (39) 789 798 333)

(Livorno VPC, Leghorn Army Depot (Camp Darby), Gate 27/Building 5138, SS 1 Aurelia, I-56018 Tirrenla/Pisa, Italy, Telephone 800#: 800 053388)

(Naples VPC, Naval Support Activity, Via Scarfoglio 20, Building 50 80125 Agnano, Napoli, Italy, Telephone 800#: 800 87267227)

(Sigonella VPC, Base Militare USA/NAS II, Strada Statale 417 Catania – Gela, 95030 Plano d'ARCI/Sigonella (Ct), Italy, Telephone 800#: 800 053733)

(Vincenza VPC, Caserm Ederle, Bldg 61, 36100 Vincenza Italy, Telephone 800#: 800 053388)

Korea VPC (Pusan VPC, Camp Hialeah, Bldg # 508, Yonji-Dong, Pusanjin-Ku, Pusan, Korea, Telephone 820 51 819 4870)

(Seoul VPC, Camp Kim, Bldg # 1230, Seoul , Korea, Telephone 82 27 7915 7011)

(Taegu VPC, Bldg # 1415, 20th Support Group, Camp Henry, Taegu, Korea, Telephone 82 53 470 8112)

Netherlands VPC (Schinnen VPC, 254 BSB Nutherweg 60, 6365 Er-Shinnen, The Netherlands, Telephone 800#: 00 800 87267227)

Puerto Rico VPC (Avenida J.F.Kennedy, Km 2.5, San Juan, Puerto Rico, Telephone 800#: 888-872-6064)

Spain VPC (Rota Spain, Transportes Internacionales Ferris, S.A., Avenida Crucero Baleares, #18, 11520 Rota (Cadiz), Spain, Telephone 800#: 0034 900 214304)

Turkey VPC (Incirlik VPC, Transcar GmbH/Delta Trading & Shipping, Inc., Ceyhan Yolu 10 Km, No 65 Adana, Telephone 800#: 0800-479-7644)

(Izmir VPC, Transcar GmbH/Delta Trading & Shipping, Inc., Hacilar Kiri, Caddesi No 15/1, Bornova, Telephone 800#: 0800-479-7644)

For additional information, Website for VPCs: http://www.whereismypov.com/

APPENDIX G

PERFORMANCE WORK STATEMENT FOR PACKING, CONTAINERIZATION AND LOCAL DRAYAGE OF DIRECT PROCUREMENT METHOD (DPM) PERSONAL PROPERTY SHIPMENTS

PART 1 DESCRIPTION OF SERVICES

A. Scope of Work. The contractor must furnish all personnel, equipment, facilities, supplies, services and materials, except as specified herein as Government-furnished, for the preparation of personal property of Department of Defense personnel for shipment and/or storage and related services through the DPM. Work to be performed will be those services in the Schedules awarded to the contractor as outlined in individual Contract Line Item Number (CLIN) items. Tasks by type of move are reflected in the following chart showing which tasks normally apply to each type of move. Specific requirements for each task are described below. If specific instructions or requirements are not provided, commercial standards of services and best business practices are acceptable.

TASK	OUTBOUND HOUSEHOLD GOODS	OUTBOUND UNACCOM PANIED BAGGAGE	INBOUND HOUSE HOLD GOODS	INBOUND UNACCOMPANIED BAGGAGE
Premove Survey	X			
Weighing	X	X	X	X
Time Requirements	X	X	X	X
Preparation, Packing, Loading, and Containerization	X	X		
Tagging, Inventorying, and Packing List	X	X		
Appliance Servicing and Unservicing	X	X	X	X
Containers and Vehicles	X	X	X	X
Marking Exterior Shipping Containers	X	X		
Storage	X	X	X	X
Unpacking/ Unloading and Loss and Damage Reports			X	X
Documentation	X	X	X	X
Reports	X	X	X	X

1. Premove Survey. The contractor will determine the nature of personal property offered for shipment either by physical inspection or telephone survey with the member/employee. The

survey must be conducted at a time and date mutually agreed upon between the contractor and the member/employee. Any pack/pickup date changes must be coordinated with the ordering officer.

2. Weighing.

a. The gross, tare, and net weight of all shipments must be determined through the use of scales properly certified by a state inspector of weights and measures in accordance with (IAW) the regulations of the state or district having legal jurisdiction over the scales. Personnel designated to operate the scales must be licensed or otherwise qualified as weigh masters if required by the state, commonwealth, or district. When a metric scale is utilized, the contractor must use 1 kilogram per 2.2 pounds for conversion.

b. The contractor must submit weight tickets, reflecting gross, tare, and net weight, in duplicate, properly certified IAW federal, state, and commonwealth or district regulations to the ordering officer with documentation (Contract Data Requirements List (CDRL) 0002).

c. When scales are not available or their use is not practical, the application of a constructive weight of seven pounds per cubic foot will be used provided prior written approval is obtained from the ordering officer. (See Paragraph A.2.d for constructive weight of professional books, papers, and equipment (PBP&E), (also known as PRO or PRO-Gear).

d. When PBP&E are included as part of the shipment, the weight of each item individually described on the inventory must be entered on the same line of the inventory next to the description. The total weight of such articles must be annotated separately on the inventory and packing list. The PBP&E weight may be obtained using bathroom or platform type scales. If it is not possible or practical for the contractor to weigh the items at the time of packing and pickup, and there is no cube indicated on the inventory, a constructive weight of 40 pounds per cubic foot will be used for PBP&E.

e. The weight tickets must contain the name and address of the weighing station, the date, name of contractor, van or trailer number, name of member/employee, call number assigned by the ordering officer, and signature of the weigh master.

f. For inbound personal property, the contractor must bill on the origin net weights obtained from the Personal Property Government Bill of Lading (PPGBL) or other movement document and need not submit a weight certificate, unless a reweigh is ordered. When a reweigh is ordered, the contractor must bill on the reweigh weight.

g. If the PPGBL, movement document, or container does not reflect the net weight for inbound shipments or if the PPGBL is unavailable at the destination, the contractor must bill on the origin gross weights obtained from the PPGBL, or other available sources, such as containers or supporting documentation. The contractor is required to use all means available (containers, supporting documentation, etc.) to obtain a net weight prior to submitting the bill. If the bill is submitted on the origin gross weight, the contractor is paid for the gross weight based on the net weight bid price.

h. The contractor must perform reweigh services when ordered. The reweigh will normally be requested at the time the delivery order is placed and must be performed IAW instructions set forth in Paragraph A.2.a. When so advised by the ordering officer, a designated representative of the ordering officer or the member/employee must be permitted to accompany, in a separate conveyance, the contractor to witness the reweigh. This would be at no extra charge and the contractor would not provide the separate conveyance.

i. When a reweigh is ordered, the contractor must furnish the ordering officer weight tickets in duplicate within seven workdays of completion of the service.

j. When the weighing of a shipment at origin is witnessed by the Personal Property Shipping Office (PPSO), the back of all copies of the weight ticket will be annotated with the statement "weight observed" and verified by the signature of the PPSO. The number 7 copy of the PPGBL (property received copy) will be similarly annotated prior to mailing to the destination PPSO. When computer generated PPGBLs are used, the copy going to the destination PPSO will be annotated.

k. Billing Procedures. For Continental United States (CONUS) activities, to include Hawaii and Alaska, shipments are payable on the basis of 100-pound minimum weight for unaccompanied baggage (UB) and a 500-pound minimum weight for household goods (HHG), net or gross weight, as indicated in the bid item. For overseas activities, excluding Hawaii and Alaska, shipments are payable on the actual net weight shipped.

l. Actual pieces, weight, and cube of UB shipments will be provided to the Transportation Office (TO)/PPSO prior to the issuance of the PPGBL.

3. Time Requirements.

a. The ordering officer will normally give the contractor notice to commence services ordered herein at least one full workday prior to the date specified. Oral orders will be confirmed in writing within two workdays following order acceptance by the contractor. The contractor will be available to receive orders between the hours 0800 and 1700. Upon request, the contractor must provide information as to whether the service will be performed between the hours of 0800 to 1200 hours or between the hours of 1200 to 1700 hours, based upon the best information available.

b. In unusual situations, it may be necessary for the ordering officer to direct performance of services at specified times or days. When services are ordered for other than normal duty days and hours, then overtime charges are applicable under Schedule I, Item 0014, Additional Services.

c. The contractor must not begin pickup or delivery services at a member/employee's residence before 0800 hours or after 1700 hours without prior approval of the ordering officer and the member/employee. The contractor must not begin any service that will not allow completion by 2100 hours without approval by the ordering officer and the member/employee by 1630 hours of the scheduled date. When services cannot be completed on the scheduled date, the contractor must notify the ordering officer and the member/employee. In case of an approved

suspension of operations, the contractor must assure his/her return the next workday at 0800 hours to complete the services.

d. If containerization is ordered at the contractor's facility, the HHG or UB must be picked up on the date and within the hours specified. Unless a longer period is authorized by the ordering office, the maximum containerization time allowed at the contractor's facility will be three workdays following the specified pickup date for HHG and two workdays following the specified pickup date for UB.

e. The contractor must accept from commercial carriers and pickup from commercial, air, water, and military terminals inbound shipments of HHG or UB. The contractor must notify the ordering officer upon arrival of a shipment but not later than 1200 hours of the next workday. Delivery must be affected within three workdays following the date of the contractor's arrival notification unless otherwise specified. For shipments in storage, the contractor must affect delivery to the residence within three workdays following notification for delivery by the ordering officer e.g., ordering officer calls on Monday, personal property must be delivered on or before Thursday. The contractor must not deviate from the specified delivery date unless approved by the ordering officer.

4. Preparation, Packing, Loading, and Containerization.

a. Personal property will be prepared, packed, loaded, and containerized for all types of shipments destined for the CONUS or Outside CONUS (OCONUS). It is the contractor's responsibility to coordinate with the ordering officer container size and configuration for each mode of shipment prior to packing containers.

b. The contractor must perform all preparation and packing in a manner requiring the least cubic measurement, producing packages that withstand normal movement without damage to the container or contents and at a minimum of weight. All shipments must be protected from the elements (rain, snow, sun,) and theft at all times.

(1) Items of unusual nature may require disassembly service by a third party. The contractor must not arrange for third party servicing without the authorization of the ordering officer. The charges for third party service must be billed by the contractor as a separate charge on the invoice and supported with two copies of the third party Company's invoice. Examples of such items are: shranks, wall units, grandfather clocks, and grand pianos.

(2) The contractor must not be required to disassemble swing sets, outdoor recreation equipment, television and radio antennas, and similar articles. The member/employee must disassemble these items. Items disassembled by the member/employee must be shown in the remarks section of the inventory as disassembled by the member/employee (DBO).

(3) Member/Employee Packed Items. Items already packed by the member/employee must be inspected and repacked by the contractor, with the exception of Schedule I, Item 0006, Outbound Service-Unaccompanied Baggage Packed by Member/Employee and Item 0007, Outbound Service-Unaccompanied Baggage Packed By Member/Employee-Consolidated Shipments/Government Facility.

(4) Trunks and Footlockers. Trunks and footlockers may contain a properly packed quantity of HHG that is reasonable for the construction and condition of the container.

c. When the ordering officer authorizes tailgating, the load must not extend beyond the surface of the tailgate or beyond the surface of the vehicle. The tailgated items must be protected from inclement weather by a suitable covering.

d. Containerization. Containerization of outbound HHG and UB must be done at the member's/employee's residence, unless otherwise authorized by the ordering officer. The contractor must perform all exterior containerization services as prescribed in Paragraph A.7 for the type of articles, destination, and method of shipment designated by the ordering officer.

(1) Firearms. When firearms are included in containerized shipments, they must be placed in the number one container in such a manner to permit easy withdrawal for inspection. Model, serial number, and gauge of the firearm must be listed on the inventory form (See Paragraph A.5.c.

(2) Boats. Boats may include, but are not limited to, the following: canoes, skiffs, light rowboats, kayaks, and sailboats. The contractor must be required to accept a boat and/or boat trailer less than 14 feet in length or over 14 feet in length (member only) but less than 500 pounds in weight from a uniformed Service/Agency member/employee. Components and boat accessories that will not fit into a ASTM-D4169-01 or Military Traffic Management Command (MTMC) Pamphlet 55-12, Commercial Containers for Department of Defense Household Goods Shipments container will be containerized IAW Federal Specification PPP-B-601H, Boxes, Wood, Cleated Plywood. The member will be responsible for any special crating or materials needed to move the boat by DPM.

e. Security Seals. All exterior HHG/UB containers and boxes, including overflow and oversize boxes and rug tubes/cartons, will be sealed with accountable seals at the member's/employee's residence, unless otherwise authorized by the ordering officer. Sealing will be completed prior to any movement and the seal (control) numbers entered on the inventory, cross-referencing the container number. Two seals, as a minimum, for UB, will be used per box and seals will secure the access overlap top and ends. If only two seals out of a set of four are used, the seals not used must be destroyed at the time of sealing or given to the member/employee. Four seals, as a minimum, on HHG, must be used per box and seals will secure the access overlap door and side panels.

f. Removal of Debris. Packing and loading at the origin must include, as a minimum, removing from the member's/employee's residence all empty contractor-provided containers, packing materials, and other debris accumulated incident to packing and loading unless specifically waived by the member/employee in writing.

5. Tagging, Inventorying, and Packing List. The contractor, in coordination with the member/employee, must prepare an accurate, legible, HHG/UB descriptive inventory similar to Figure G-1. The contractor must count and examine all goods tendered for shipments, receipt for them, and make written exception for any goods not in apparent good order. All tagging will be accomplished prior to the removal of goods from the residence.

a. Inventory Identification. Each carton must be marked to indicate the general contents and member's/employee's last name. Each carton must be tagged and inventoried as a separate inventory line item. Identify the cartons by type and cube with an indication of general contents, such as, linens, pots and pans, mirror carton, 3.5 cubic feet.

b. Inventory Symbols. The "Exception Symbols" and "Location Symbols," as shown in Figure G-1, must be used to describe locations and exceptions. Locations and exceptions must be true and accurate. The omission of exception symbols will indicate good condition except for normal wear. Describe in as much detail as possible items of furniture; for example, television sets should be identified as being either "color" (C) or "black and white" (B&W) and console or portable. The contractor must annotate on the inventory item(s) such as TVs, stereo components, computer hardware, VCRs, video cameras, etc., by make, model, and serial number when these are visible on the outside of the item.

c. Each privately owned firearm will be annotated on the inventory by make, model, caliber or gauge, and serial number.

d. For PBP&E, ensure that the term "PRO-GEAR (PRO)" is used to identify such articles on the inventory, together with the cube and weight of the individual carton; a line entry item for each container, such as, carton PRO 3 cubic ft., 53 lbs. These items identified by the member/employee must be separated from other items of the shipment, weighed separately, and placed in separate boxes or cartons to provide safe transportation. The symbol PRO must be used. The total weight of the packed professional items must be recorded on the last page of the inventory and on the packing list for outbound HHG and UB shipments.

(1) For civilian employees, PBP&E includes an employee's personally owned professional or specialized items and other materials used for official duty performance. PBP&E does not include sports equipment; office, household, or shop fixtures; or furniture e.g., bookcases, file cabinets, desks, and racks of any kind. PBP&E are HHG. If the PBP&E may cause an excess weight condition, PBP&E may be moved as an administrative expense, (See the Joint Travel Regulations, par. C8120-C, Administrative Expense) as opposed to a HHG transportation expense, subject to the following conditions:

(2) The employee must furnish an itemized inventory of PBP&E for review by an official designated by the authorizing/order-issuing command, at the new permanent duty station (PDS);

(3) The employee must furnish evidence (as determined by the authorizing/order-issuing command) that transporting the itemized materials as part of the HHG results in a weight in excess of the maximum weight allowance; and

(4) An official designated by the authorizing/order-issuing command at the new PDS, must review and certify that the itemized PBP&E, are necessary for the proper performance of the employee's duties at the new PDS, and that if these items are not transported to the new PDS, the same or similar items would have to be obtained (at Government expense) for the employee's use at the new PDS.

e. Items disassembled by the contractor must be shown in the remarks section of the inventory as contractor disassembled (CD). Items disassembled by the member/employee must be shown in the remarks section of the inventory as DBO. When an article is packed in an original container furnished by the member/employee, the inventory must indicate the type of article and will be shown as "CP", contractor packed.

f. Motorcycles, mopeds, and motor scooters must be inventoried as one line item, listing their serial number, make, year, model, and odometer reading. For international shipments, ensure one copy of the title and/or registration are attached to all copies of the Government Bill of Lading (GBL)/Commercial Bill of Lading/Transportation Control and Movement Document (TCMD). (NOTE: Motorcycles and mopeds that do not conform to vehicle emissions standards and motor vehicle safety standards of the destination country cannot be shipped as part of a HHG shipment.)

g. When the ordering officer permits the contractor to partially containerize a shipment at the warehouse, each item removed from the residence must be annotated on the inventory as containerized warehouse (CW).

h. Inventory Form. The inventory form must bear the signature of the member/employee, and date signed, together with the signature of the contractor's representative and date signed certifying to its accuracy and completeness.

i. The contractor must prepare the inventory in five copies for outbound HHG and UB shipments and in three copies for local drayage moves. The original and all copies must be legible and must bear the name and complete mailing address of the contractor. The original inventory will be furnished to the ordering officer, the contractor will retain one copy, and one copy will be given to the member/employee (CDRL 0003). For HHG and UB, the contractor must place in a waterproof envelope secured to the No. 1 container: one copy of the inventory; one copy of the DD Form 1299, Application for the Shipment and/or Storage of Personal Property (Figure 401-1), and if an overseas shipment, one copy of the member's/employee's orders and custom's document. Additionally, for HHG, the contractor must place an envelope containing the following documents in an easily accessible location inside the No. 1 container: one copy of the packing list and Exception Sheet for shipments released from nontemporary storage (NTS). For unaccompanied shipments, the contractor must place one copy of the member's/employee's orders inside the carton prior to sealing. The member/employee will be required to furnish all necessary copies of their orders.

j. Annotate the receiving document or inventory to show any overage, shortage, and damage found, including visible damage to external shipping containers and condition of security seals each time custody of the property changes from a storage contractor (warehouseman) to the contractor or from one contractor or carrier to another. When available, use the same inventory prepared at origin to verify delivery and condition of the articles at destination.

k. Packing Lists. The packing list identified in Figure G-2, or a similar format, will be used. The contracting officer will advise the contractor as to the required packing list prior to the

start date of the contract. The contractor must prepare a packing list at the time the goods are packed, noting the number of each piece, the weight, and the cubic measurement.

l. Removal from NTS. When the personal property is to be removed from NTS, the contractor must obtain from the storage contractor two legible copies of the NTS inventory and in conjunction with the storage contractor, check each item of the storage lot IAW such inventory. If at the time each item is checked there is a difference in condition of the item from that listed on the NTS inventory, the contractor must prepare an Exception Sheet and such differing conditions must be noted thereon. When the contractor elects to make a new inventory, differences as to condition of individual items, as compared with the NTS inventory, must be shown on an Exception Sheet as described above. In the event the opinions of the contractor's representative and storage contractor's representative differ as to shortages and overages or condition of an item(s), both opinions must be listed on the Exception Sheet and separately identified as to the source. Both parties will sign and date the Exception Sheet, each retaining a legible copy for their respective files (CDRL 0004). Such an Exception Sheet must remain an internal industry document. In the event a claim is filed, the contractor must provide legible copies of the Exception Sheet to the claims officer.

(1) Preparation of Inventories. Inventories prepared on shipments released from NTS must indicate the same article identification and item number as on the NTS inventory or a cross-reference must be made on the new inventory indicating the item number and identification from the NTS inventory. The use of legible photo reproductions of the storage contractor's inventory in lieu of preparing a new inventory is permissible.

(2) Identify personal property by affixing a tag or tape to each article (not applicable to individual items in packing containers). Each shipment must be separately identified by lot number. Each article must be assigned a number that must correspond with the item number shown on the inventory form. The type of identification used and the method of affixing it to the article must be such as not to damage any article so identified.

(3) Identify items disassembled or serviced by contractor or by third party at origin and record such items in the remarks section of the inventory.

6. Appliance Servicing and Unservicing. The contractor must service and unservice appliances IAW manufacturer's specifications. If third party servicing or unservicing is required and approved by the ordering officer, the contractor must bill the services as prescribed in Paragraph A.4.b.(1).

7. Containers and Vehicles

a. Government-Owned Containers (GOCs). GOCs are containers constructed IAW Commercial Standard American Society for Testing and Materials (ASTM)-D4169-01, Standard Practice for Performance Testing of Shipping Containers and Systems. GOCs also include those containers listed in MTMC Pamphlet 55-12, those meeting Federal Specification PPP-B-601H, and wooden overflow and oversize containers purchased by the Government or received by the contractor awarded the Schedule II, Inbound Services contract. GOCs must be used to the extent

as they are available for Schedule I, Items 0001 through 0005, before using contractor-furnished containers.

(1) All GOCs and contractor-furnished containers will be free of defects (holes, loose or broken framing, missing skids, caulking repairs, separated plywood, etc.). Unacceptable containers are those that have been extended to accommodate oversize or overflow items, any panel bowed or bulging beyond their normal conformity, those with deteriorated plywood (either rotted or delaminated), those caulked on outside seams or joints, and those patched without the use of caulking compound. Patches on the outside surfaces are not acceptable because they increase the overall dimension and are subject to being scraped off during handling. The floor must be solid and all skids installed and in sound condition.

b. Containers for articles such as large pieces of marble or glass table tops that require more protection than the standard packing techniques must be constructed IAW ASTM D6039/D6039M-96, Standard Specification for Crates, Wood, Open and Covered. These containers must be used for interior packing purposes.

c. Skids. Any container that must be handled with a forklift must be constructed with two or more skids. All wooden containers entering the Defense Transportation System (DTS) with a gross weight of 100 pounds or more or with length and width dimensions of 48 inches by 24 inches or more must be equipped with two skids of not less than a minimum of 3 inches high and 3 1/2 inches wide. Skid sizes must be IAW PPP-B-601H.

d. Banding. Containers of plywood construction must be banded IAW Commercial Standard ASTM D3953-97, Standard Specification for Strapping, Flat Steel and Seals or of equal quality with nonmetal banding.

e. Coopering of Government-owned containers must be performed when authorized by the ordering officer. Patches must not increase the overall container dimensions. All repairs will be done prior to delivery to residence.

f. Markings. The contractor must mark all Government-owned containers by stenciling with letters at least one inch high. Freehand marking must not be used. Felt tip markers must not be used. All old shipment markings must be obliterated prior to delivery to residence. Each container must be stenciled with all required elements.

(1) Permanent markings on containers must be legible and conform to Commercial Standard ASTM-D4169-01 and MTMC Pamphlet 55-12. The following permanent markings must be stenciled (see Figures G-3 and G-4) in black letters 1 1/2 inches high:

On one side and one end:

USE NO HOOKS
STORE UNDER COVER
US PROPERTY
MTMC APPROVED

In the appropriate places:
CENTER OF BALANCE

LIFT HERE
FORKLIFT HERE

(2) On Commercial Standard ASTM-D4169-01 and MTMC Pamphlet 55-12 containers, the following additional permanent markings must be stenciled on one side and one end toward the top of the container in black letters 2 inches high. The contractor must stencil the word "UP" with an arrow pointing to the top of the container. Then under "UP" on an orange background not to exceed 8 x 10 inches in black letters approximately 2 inches high, the contractor must stencil "DPM." The word "EXPEDITE" must be symmetrically spaced below in 1 1/2 inch high black letters. (See Figures G-3 and G-4.)

(3) Shipments identified as "BLUEBARK" must be stenciled in 1-inch letters with the code word BLUEBARK above the GBL number.

(4) As a minimum, the property member's/employee's last name must be legibly hand written or stenciled on all containers prior to departure from the origin residence, warehouse, or other pickup point.

(5) DPM HHG and UB containers must have a completed military shipping label (MSL) affixed on one side and one end panel, except for duffel bags and similar packages which must have an MSL affixed to one surface. The MSL (Figure G-6) requires human-readable information as well as linear and 2-dimensional bar codes. The human readable and linear bar coded portions of the MSL are prepared as described below and the 2-dimensional bar code is prepared IAW Appendix S. If the shipping container does not lend itself to the application of the label, or if the label would cover or interfere with other required markings, the label will be attached to a general purpose tag or a placard. The general purpose tag or placard will be tied, wired, or otherwise fastened to the shipment unit or movement conveyance.

(6) The following listed human readable data and Code 39 linear bar codes will be placed on each MSL. Some entries are keyed to numbered blocks on the DD Form 1387, Military Shipment Label, and some are in addition to that form's requirements. The human readable unit of measure will be provided in United States (US) standard terms, e.g., pieces, inches, feet, pounds for measured items and the data values will be rounded up to the nearest whole number with leading zeros suppressed. Also see MIL-HDBK-129 Marking for Shipment and Storage, and ANSI MH10.8.1.

1 Transportation Control Number (TCN): Human readable and linear bar code using 1/2 inch high Code 39 format.

2 Transportation Account Code (TAC), PPGBL Number, and Carrier.

3 From: The consignor DODAAC and in-the-clear address.

4 Type Service: In-the-clear text (e.g., TGBL Cd J). The clear-text descriptions may be derived from the personal property TCN field 15 descriptions.

5 Ship to/POE: Three-digit air/water POE code, and enough space for 5 lines of up to 35 characters for the in-the-clear address.

6 Transportation Priority: Bold text 3/4 inches tall.

7 POD: Three-digit air/water POD code or blank.

8 Required Port Delivery Date (RPDD): From the PPGBL.

9 Consignee/Mark For: Member's Name followed by the consignee DODAAC and/or Mark For in-the-clear address, and linear bar code using 1/2 inch high Code 39 format.

10 Weight: Actual gross weight (this piece) with unit of measure. Do not zero fill.

11 RDD: Three-digit code or blank. Blank for classified Unit Move.

12 Cube: Cube (this piece) with unit of measure. Do not zero fill.

13 Tare Weight: Weight of container before loading personal property.

14 Date Shipped: Four-position code or in-the-clear date. Blank for Unit Move.

15 Net Weight: Weight of personal property loaded into a container.

16 Piece Number: Piece number of this shipment (of Total Pieces) and a linear bar code using 1/2 inch high Code 39 format. Do not zero fill. Piece Number and Total Pieces may be expressed as "Piece Number of Total Pieces" to save space on the label.

17 Total Pieces: Total number of pieces in this shipment unit. Do not zero fill.

(7) Carriers may optionally also stencil shipment markings on outside of containers. Freehand marking is not acceptable. Markings will be proportional to the available space on the container. Old markings not applicable to the current shipment must be permanently obliterated before the container's arrival at the member's/employee's residence. One copy of the member's/employee's orders must be placed in each container used to ship UB. When an order applies to more than one member/employee, the name of the member/employee to whom the baggage belongs must be identified.

(8) Overflow Containers. Overflow containers (Schedule I, Item 0003) must be limited to use for those items that accumulate over and above that which can be packed into a ASTM-D4169-01 or MTMC Pamphlet 55-12 container. The construction of an overflow container must be IAW PPP-B-601H. The overflow container normally is of lesser size than ASTM-D4169-01 or MTMC Pamphlet 55-12 containers and must be limited to one per shipment.

(9) Oversize Containers. Oversize containers (Schedule I, Item 0003) must be limited to use for a single item that exceeds the dimensions of and cannot be accommodated in ASTM-D4169-01 or MTMC Pamphlet 55-12 container and therefore requires a specially built container. One or more of this type may be required per shipment. These containers must be constructed IAW PPP-B-601H and the exterior container dimensions furnished to the ordering officer.

(10) Other Shipments. Containers constructed for other shipments (Schedule I, Item 0003) must be constructed IAW PPP-B-601H. Other shipments are defined as small shipments that require a lesser size box (container) than specified in Commercial Standard ASTM-D4169-01 or MTMC Pamphlet 55-12.

g. The contractor must report, store and, when directed by the ordering officer, reposition Government-owned HHG containers. When repositioning is ordered, the contractor must load the GOCs on vehicles and deliver them to the site identified by the ordering officer.

(1) The outbound contractor, when directed by the ordering officer, must pick up and store empty GOCs from other local carrier or Government facilities within the contract area of performance. When the contract is awarded to different contractors, storage of the GOCs is the responsibility of the outbound contractor unless otherwise directed by the ordering officer. The storage of containers contemplated under this contract means, as a minimum, that containers, if not stored within a building, must be stored in a manner to protect from precipitation, ground water or other moisture.

(2) GOC Report. The contractor must submit a GOC report (a local form or for Air Force Installations, AF Form 384, Government-Owned Container Control Record). The report must be submitted to the ordering officer 15 days after the contract start date and thereafter on the first workday of each month (CDRL 0005). The contractor must keep an accurate, up to date count of all GOCs.

(3) Serviceable/Unserviceable Containers. The contractor must not commingle serviceable or unserviceable containers. After inspection by the ordering officer, these two categories of containers must be segregated. The ordering officer and contractor must mutually agree upon the inspection and disposition schedule. Unserviceable containers must be disposed of at no cost to the Government.

(4) The new outbound contractor must pick up the serviceable empty GOCs from the previous contractor(s) not later than 30 calendar days after commencement of the contract.

h. Vehicles. The contractor will ensure that all vehicles used in the movement of personal property must be of a safe and sound condition so as not to permit damage to personal property.

8. Outbound Documentation and Movement.

a. GBLs and similar documents covering outbound HHG shipments must be picked up from the ordering officer by the contractor each workday or obtained IAW locally established

procedures such as mail or courier. Distribution of completed GBLs and TCMDs will be as outlined below.

b. On outbound HHG shipments, the contractor must complete by typing information on the original GBL and all copies, the following information:

(1) Block 26 (Packages). Enter the number and kind of containers, such as 1 F/L, 2 CTNS, etc.

(2) Block 27 (Description of Shipment). Enter the aggregate weight and cube of the total number of each different type of container shown in Block 26.

(3) Block 28 (Weight). Enter the gross, tare, and net weight.

c. On outbound UB shipments, the contractor must provide information on actual pieces, weight, and cube to the TO/PPSO within one day after pickup so that the TO/PPSO can prepare the PPGBL. Information must include:

(1) Packages to include the number and kind of containers, such as 1 F/L, 2 CTNS, etc.

(2) The aggregate weight and cube of the total number of each different type of container.

(3) The gross, tare, and net weight.

d. On all outbound shipments moving by a GBL, the contractor must surrender the original and copies 2, 3, and 4 of the GBL to the carrier when the shipment is picked up. The contractor must return copies 5, 6, and 7 of the GBL to the ordering officer not later than the close of business the next workday after the day the shipment is picked up (CDRL 0008). Computer generated PPGBLs are not numbered. In instances where computer generated PPGBLs are used, enough copies must be made to ensure the right number of copies will be submitted. All copies of the GBL returned to the ordering officer must bear a legible pickup date, carrier pro number stickers, and signature of the carrier's representative. The contractor must furnish the ordering officer the completed inventory, packing list, and weight tickets not later than four workdays from date of pickup for HHG and three workdays from date of pickup for UB shipments.

e. On outbound overseas shipments, the contractor must complete by typing information on the original TCMD, (Figure G-10) and all copies, the following information:

(1) Block 22 (Pieces). Enter the total number of pieces in the shipment.

(2) Block 23 (Weight). Enter the gross, tare and net weight.

(3) Block 24 (Cube). Enter the total cube of the shipment.

f. One completed copy of the TCMD must be placed in the waterproof envelope on the number one container, three copies will be given to the carrier, and one annotated copy will be returned to the Contracting Officer's Representative.

g. If any container being prepared to enter the DTS has an outside measurement greater than 72 inches, the contractor is required to prepare an Outsized Air Cargo Report (CDRL 0011).

h. Carrier Pickup of Shipments. Within one workday after the property is ready for shipment, the contractor will contact the assigned carrier, as indicated on the GBL, to arrange for pickup. When shipments are not picked up by the assigned carrier by close of business of the next workday, after contractor notification, the contractor must notify the ordering officer of the carrier's failure to pickup the shipment not later than 9 A.M. of the next workday.

i. For outbound shipments requiring drayage to an air or water terminal within the contract area of performance, the contractor will deliver the shipment to the designated terminal on the RPDD for UB or within six workdays of a request by the ordering officer for HHG. For shipments drayed to a terminal, the delivery receipt or after transfer document must be returned to the ordering officer not later than the next workday following delivery.

j. The contractor is required to submit a weekly report showing outbound shipments on-hand which where picked up prior to the previous Wednesday (CDRL 0009).

k. When the contractor's facility is located in a town, city, or metropolitan area other than the location of the PPSO, telephone notification of completed containerization or arrival of shipments must be considered as meeting the requirements for written notification. However, the contractor must mail the written notification to the ordering officer within one workday following the day of telephone notification.

l. On outbound overseas shipments, the contractor must prepare and affix a 2 dimensional and linear bar coded MSL as described in Paragraph A.7.f.(6)1-17 and Appendix S.

9. Storage.

a. Identification. All outbound shipments must be properly identified by the member's/employee's name, GBL number, and call or lot number. Such identification must be in plain view on each lot.

b. Vehicles must not be used for the storage of shipments. Pickup and drayage includes placing the goods within the facility on the pickup date specified in the order; however, at the latest, the shipment must be placed in the facility no later than the day following pickup. When the contractor chooses to allow the personal property to remain on the truck until the next working day, contractor will be held liable for any loss or damage occurring during this time without regard to cause.

c. All personal property must be stored to maintain a minimum of two inches of clearance from the floor to the undermost portion of the personal property. This elevation requirement must apply after three workdays handling-in period. Items waiting for the completion of handling-in services must be protected at all times. In addition, the property must

not be stored in contact with exterior walls. Height of HHG stacked loose must not exceed 10 feet. Extension ladders, TV antennas, swing sets, and similar items are excluded from this height requirement.

d. Shipping Containers. The contents of containerized shipments must not be removed from containers when placed in storage. Shipment must not be decontainerized prior to delivery to residence unless ordered by the ordering officer.

e. Storage Charges. Storage charges for outbound HHG and UB shipments must not commence earlier than the sixth workday following date of ordering officer's receipt of contractor's notification of completion of containerization service. Storage charges must apply for each 30-day period or computed as a fraction thereof. Date of release from storage must not be considered in computation of storage charges.

f. Storage charges for inbound HHG and UB shipments must not commence earlier than the sixth workday following date of contractor's notification to the ordering officer of arrival of shipment. Storage charges must apply for each 30-day period or computed as a fraction thereof. Date of release from storage must not be considered in computation of storage charges.

g. When the contractor cannot release a shipment from storage or deliver a shipment on the date requested by the ordering officer, the storage charges must cease on the requested date instead of the actual date of release.

h. The contractor is required to submit an on-hand report for all inbound shipments at the contractor's facility (CDRL 0010). This report will list all inbound shipments in storage and/or waiting to be delivered. Negative reports are required. The Transportation Officer will identify when reports are to be submitted.

i. The ordering officer must follow Service guidelines when authorizing additional storage. The ordering officer will notify the contractor of the expiration date of storage at Government expense.

10. Facilities. Contractor's facilities must meet the guidelines outlined in Appendix D.

a. Inspection of Contractor's Facility. The contractor's facility will be initially inspected and approved by a representative from the contracting office or PPSO for compliance with this contract and the standards and regulations stated or referenced therein. Thereafter, inspections will be on a quarterly basis or, if deemed necessary, on a more frequent basis. Inspections will be conducted using Appendix E. If a facility is found to be unsatisfactory, it may be declared ineligible to receive further orders under the contract.

b. Upon receipt of contract award, the contractor must furnish to the contracting officer evidence of the kinds and minimum amounts of insurance covering work to be performed. The contractor must maintain at least the minimum insurance coverage required as specified in the Federal Acquisition Regulation Part 28.307.2 Liability, throughout the contract period for the following policies: (1) Workmen's Compensation Insurance $____; (2) Comprehensive General Liability Insurance $____, and Automobile Liability Insurance $____. Each policy must contain

an endorsement that cancellation or material change in the policy must not be effective until after a 30-day written notice is furnished to the contracting officer.

11. Cargo Insurance. The contractor must provide a certification of cargo insurance reflecting coverage on a continuous basis in at least the amounts shown below to cover legal liability. The certificate will contain the statement that the insurance company must provide the Commander MTMC, Attn: MTPP-HQ, a 30-day written notice of any change, expiration, or cancellation of said policy. The underwriter of cargo insurance must have a policyholder's rating of "A" or better in current issue of Best's Insurance Guide. The certificate must be prepared with original signatures and provided to the Commander, MTMC, Attn: MTPP-HQ, using MT-HQ Form 49-R (See Figure B-1). The following is the minimum cargo liability coverage required:

	Amount Per Shipment	**Amount Per Aggregate Losses/ Damages at any one place and time**
Domestic	$10,800	$150,000
International	$10,800	$150,000

12. Delivery, Unpacking, Unloading, and Loss and Damage Reports.

a. The contractor must furnish the ordering officer the written receiving notice not later than the next workday following the arrival of the inbound shipment. The receiving notice must contain the following information for each individual shipment: Name and rank/grade of the property member/employee, GBL number, number of pieces, size and type of containers, weight, and name of carrier. When markings on the containers or documents indicate the shipment is of a deceased member/employee (BLUEBARK), this information must also be provided. The above information must be obtained from the available documents or containers.

b. Unloading and unpacking, upon delivery to the residence, must include the one-time laying of rugs, assembling of disassembled furniture, unservicing of appliances, and the one-time placement of furniture and like items in the appropriate room of the dwelling or a room designated by the property member/employee. The contractor must not be required to move items after once placed as designated. Third party services as set forth in Paragraph A.4.b(1) must be performed when authorized. Unless specifically waived by the member/employee, in writing, unpacking services must be performed. The contractor must have the member/employee certify and sign on the inventory or delivery document that unpacking was or was not performed.

(1) Unpacking Service. Unpacking service must consist of unpacking, on a one-time basis, all barrels, boxes, cartons, and crates. The contents must be placed in a room designated by the member/employee. This includes placement of articles in cabinets, cupboards, or on shelving in the kitchen when convenient and consistent with safety of the article(s) and proximity of the area desired by the member/employee, but does not include arranging the article(s) in a manner desired by the member/employee. Removing from the member's/employee's premises all empty containers, packing material, and other debris must be performed at the time the goods are delivered to the residence.

c. Recording Damage or Loss. When unloading or unpacking articles at the destination residence, the contractor must, in coordination with the member/employee, check the inventory prepared at origin and inspect each article for loss or damage. The contractor must record damage and loss on a DD Form 1840, Joint Statement of Loss or Damage at Delivery (Figure G-8). The DD Form 1840 must indicate any difference in count and condition from that shown on the inventory prepared at origin and must be jointly signed by the contractor and the member/employee. For split shipments or partial deliveries, a DD Form 1840 will be completed whenever property is delivered to member/employee.

(1) The DD Form 1840 must be prepared in five copies by the contractor. The contractor must obtain a receipt by member/employee signature in the space provided on the form and provide the member/employee three copies of the DD Form 1840/1840R, Notice of Loss or Damage (Figure G-9). The contractor must furnish the origin PPSO a completed copy of the form within seven workdays after delivery (CDRL 0006). One copy of the form will be held in the contractor's files for further reference.

13. Claims. The contractor must pay, deny, or make a final written offer on any claim for loss or damage within 120 days of receipt of the claim from the member/employee, the member's/employee's insurance company, or the Government. Beginning with receipt of a claim directly from a member/employee, the contractor must inform the originator of the claim, in writing, at the expiration of each succeeding 30-day period until resolution of the claim, of the status of the claim, and the reasons for delay in making final disposition. For claims received directly from a member/employee, the contractor must furnish the quality assurance or quality control office/division of the PPSO serviced under this contract an information copy of all claims correspondence or related documents within 10 days of the receipt or dispatch by the contractor. The contractor must also furnish the contracting officer a monthly list of all claims which have not been resolved within the preceding 120-day period (CDRL 0007). The list of claims must identify the claimant, the claimant's address, the delivery order number, the date the claim was received, the amount of the claim, and the reason why the claim has not been resolved. The proper and timely resolution of claims is of the essence to this contract. The ordering officer must retain the correspondence in the contractor's quality assurance file for evaluation and reference purposes until one year after contract expires. The Government reserves the right to consider any and all claims, paid or unpaid, by the contractor, under the Disputes Clause of the contract.

SERVICE DELIVERY SUMMARY

Performance Objectives	**Statement of Work (SOW) Paragraph**	**Performance Standard**
Proper Packing/Loading/ Containerization of Personal Property for Onward Movement	Part 1, Paragraph A.4, Paragraph A.7	No more than 3 percent of total number of shipments are incorrectly packed/loaded/containerized per month.
On-time Pickup/Delivery of Personal Property	Part 1, Paragraph A.3	No more than 5 percent per month of the total number of shipments are validated customer complaints for untimely pickup/delivery.
Timely pickup/return, proper preparation of documentation	Part 1, Paragraph A.2.i, A.8.a, A.8.c, A.8.i	98 percent on-time return of completed, accurate, legible documentation to PPSO per month. 96% on-time pickup of documentation from PPSO per month.
Accurate invoicing of charges	Part 3, Paragraph 4	98 percent error-free invoice submission rate per month.
Maintain adequate facilities and serviceable equipment	Part 1, Paragraph A.10, Paragraph A.7.h	Less than three violations per quarter based on inadequate facilities or unserviceable equipment as outlined in Appendix E.
Protection and Accountability of Government-Owned Containers (GOCs).	Part 1, Paragraph A.7.a, A.7.a.(1), A.7.e, A.7.g.(1), A.7.g.(2)	No more than 2 percent of total number of GOCs improperly protected during this quarter. Less than two failures per month to re-coop GOCs within specified time frame

PART 2 GOVERNMENT-FURNISHED PROPERTY AND SERVICES

1. The Government must furnish the items listed below:

a. Government-Owned Containers

b. Government-Owned Container Control Record Form.

c. DD Form 1299, Application for Shipment and/or Storage of Personal Property, with special order and customs forms.

d. DD Form 1796, Receipt of Unaccompanied Baggage.

e. DD Form 1384, Transportation Control and Movement Document (TCMD).

2. Title to all HHG Type II wooden containers, crates or metal shipping boxes furnished by the Government must remain the property of the Government.

3. Return of Excess Government-Furnished Property. Upon expiration of the contract, the contractor must return unused Government-furnished forms and supplies to the ordering officer. Returned forms and supplies are to be in good reusable condition.

PART 3 GENERAL REQUIREMENTS

1. Application. This Statement of Work (SOW) contains basic instructions for the packaging, packing, tagging, inventorying, containerization, marking, loading, storing, unpacking, and inspecting of HHG and UB. This SOW applies to domestic and international DPM shipments. It does not apply to domestic or international Through Government Bill of Lading shipments.

2. Personnel. The contractor must furnish adequate supervision, labor, materials, supplies, and equipment necessary to perform all the services contemplated under this contract. The contractor's office must be staffed at all times during normal working hours with personnel authorized to book shipments and arrange for services under the contract. All contractors must have available an English reading, speaking, and writing employee at all times during packing and unpacking services.

3. Materials. The contractor must provide boxes, cartons, tape, labels, packing lists, filler material, paper pads, wrapping, and any other type material required to ensure proper packing for damage-free movement. All materials must be new or in sound condition. All previous markings pertaining to any previous shipment must be completely obliterated and all material must be free of any substance injurious to the articles being packed and to the member/employee. New material must be used for packing mattresses, box springs, linens, bedding, and clothing.

4. Documentation and Reports. Contractor must ensure that all documentation performed by the contractor must be accurate and legible. All invoices submitted for billing to the ordering officer must be complete and display a detailed and accurate account of services performed.

5. Quality Control and Assurance.

a. Quality Control. The contractor must establish a complete quality control program to assure the requirements of the contract are provided as specified. One copy of the contractor's quality control plan must be provided to the contracting officer as part of the proposal submission (CDRL 0001).

b. Quality Assurance. The contractor will provide monthly metrics measuring the Service Delivery Summary Performance Threshold (CDRL 0012). These statistics will be used in the monthly evaluation of the contractor and also as a part of the annual performance report.

6. CONUS to OCONUS UB shipments using Air Mobility Command (AMC) aerial ports. The contractor must provide the actual weight and cube of each shipment after pickup to the ordering officer prior to the PPGBL being produced. The RPDD will be computed based on the pickup date so it is imperative that the information is provided within one working day after pickup. TOPS will assign a RPDD based on the pickup date and print it on the bill of lading. The linehaul carrier is responsible for delivering each shipment to the assigned AMC aerial port on the RPDD assigned. The contractor will provide TCMD data on a diskette(s) to the origin AMC terminal with delivery of the shipment.

PART 4 ATTACHMENTS

Attachment 1: Figures

Attachment 2: Publication and Commercial Standards

Attachment 3: Contractor Documents Requirement Listings and Data Item Description

Attachment 4: Definitions

Attachment 5: Acronyms

Attachment 1

Figures

Figures. The following pages contain the Figures referenced in this part.

Figure	Description
G-1	Household Goods Descriptive Inventory.
G-2	Packing List of Household Goods.
G-3	Location of Permanent Markings on ASTM-D4169-01 Wood HHG Box.
G-4	Location of Permanent Markings on MIL-STD-1489 HHG Box.
G-5	Container Marking for Household Goods.
G-6	Military Shipping Label for Personal Property.
G-7	Markings of Unaccompanied Baggage.
G-8	Joint Statement of Loss and Damage at Delivery (DD Form 1840).
G-9	Notice of Loss or Damage (DD Form 1840R).
G-10	Transportation Control and Movement Document (TCMD) (DD Form 1384).

HOUSEHOLD GOODS DESCRIPTIVE INVENTORY

TAG COLOR _____ NOS. _____ THRU _____

PAGE NO. NO. OF PAGES

CONTRACTOR OR CARRIER	AGENT	CARRIER'S REFERENCE NO.
OWNER'S GRADE OR RATING AND NAME		CONTRACT OR GBL NO.
ORIGIN LOADING ADDRESS	CITY STATE	GOVT. SERVICE ORDER NO.
DESTINATION		VAN NUMBER

DESCRIPTIVE SYMBOLS

CP - Packed By Carrier
PBO - Packed By Owner
CD - Carrier Disassembled
DBO - Disassembled by Owner
PB - Professional Books
PP - Professional Papers
PE - Professional Equipment
B&W - TV Black & White
C - TV Color
MCU - Mechanical Condition Unknown

EXCEPTION SYMBOLS

BE - Bent
BR - Broken
BU - Burned
CH - Chipped
CU - Contents and Condition Unknown
D - Dented
F - Faded
G - Gouged
L - Loose
M - Marred
MI - Mildew
MO - Motheaten
P - Peeling
R - Rubbed
RU - Rusted
SC - Scratched
SH - Short
SO - Soiled
ST - Stained
S - Stretched
T - Torn
W - Badly Worn
Z - Cracked

NOTE: The omission of these symbols indicates good condition.

LOCATION SYMBOLS

1. Arm
2. Bottom
3. Corner
4. Front
5. Left
6. Leg
7. Rear
8. Right
9. Side
10. Top
11. Veneer
12. Edge
13. Center
14. Seat
15. Drawer
16. Inside
17. Door
18. Shelf
19. Hardware

ITEM NO.	STIL CK./ CR. REF.	ARTICLES	CONDITION AT ORIGIN	ROOM	EXCEPTIONS (IF ANY) AT DESTINATION

REMARKS/EXCEPTIONS _____

IMPORTANT NOTICE → *BEFORE SIGNING — CHECK SHIPMENT, COUNT ITEMS AND DESCRIBE LOSS OR DAMAGE IN SPACE ON THE RIGHT ABOVE. IF FOR ANY REASON YOU WERE NOT GIVEN OPPORTUNITY TO INSPECT THIS SHIPMENT, YOU SHOULD CALL THIS TOLL FREE NUMBER, 800-348-3746.*

"WE HAVE CHECKED ALL THE ITEMS LISTED AND NUMBERED ON THIS PAGE INCLUSIVE AND ACKNOWLEDGE THAT THIS IS A TRUE AND COMPLETE LIST OF THE GOODS TENDERED AND OF THE STATE OF THE GOODS RECEIVED"

AT ORIGIN	LOADING HAULER NAME & NUMBER *(Signature)*	DATE	AT DESTI-NATION	DELIVERING HAULER NAME & NUMBER *(Signature)*	DATE
	OWNER OR AUTHORIZED AGENT *(Signature)*	DATE		OWNER OR AUTHORIZED AGENT *(Signature)*	DATE

FORM 14 (REV. 10/93) PRINTED IN U.S.A.

Figure G-1. Household Goods Descriptive Inventory

PACKING LIST OF HOUSEHOLD GOODS Page 1 of

SHIPPING ACTIVITY OWNER (Name) (Rank or rate)

PACKED BY LOT NO. DATE

CONSIGNED TO (Name and complete address)

METHOD OF SHIPMENT

☐ Rail (LCL) ☐ Air Freight ☐ Motor Freight ☐ Water Other_____ (Specify)

Container No.	*Type of Container	Contents	Inv No.	Wt. (Lbs.)	Location of Condition	Cubic feet

*ABBREVIATIONS

FOR TYPE OF CONTAINER:		EXCEPTION SYMBOLS		LOCATION SYMBOLS	
NW - Nailed Wood	BR - Broken	F - Faded	R - Rubbed	B - Bottom	RT - Right
FB - Fiber Board	BU - Burned	G - Gouged	SC - Scratched	C - Corner	S - Side
OC - Open Crate	CH - Chipped	GC - Good Condition	SO - Soiled	F - Front	TOP - Top
BRL - Barrel	CU - Contents and Conditions Unknown	L - Loose	T - Torn	LEF - Left	LG - Leg
HGCC - Household Goods Consolidated Crate	D - Dented	M - Marred	Z - Cracked	RE - Rear	V - Veneer
		NW - Normal Wear	OR - Owner's Risk		

Figure G-2. Packing List of Household Goods

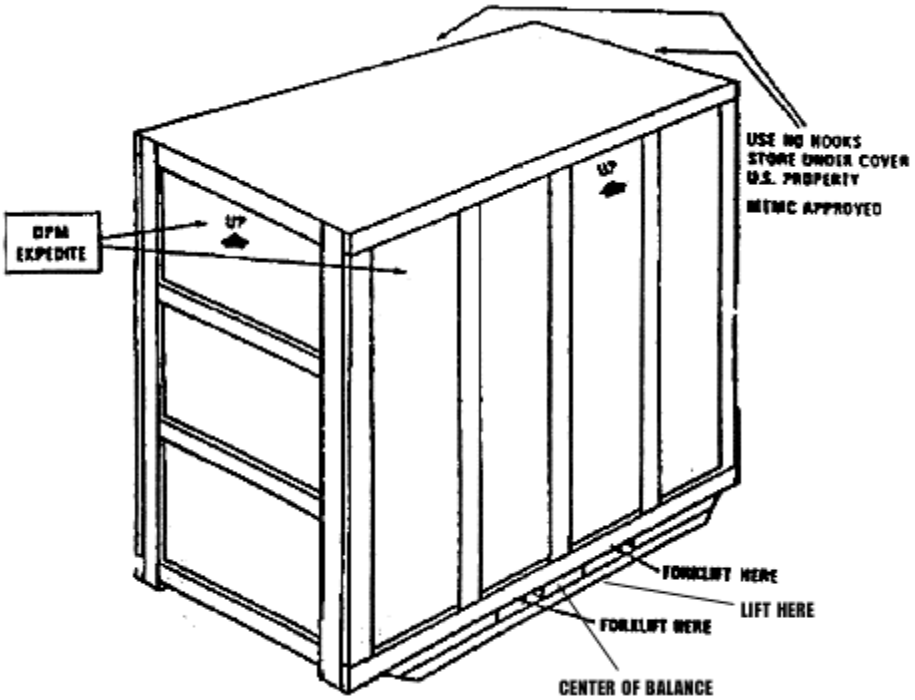

Figure G-3. Location of Permanent Markings on ASTM-D4169-01 Wood HHG Box

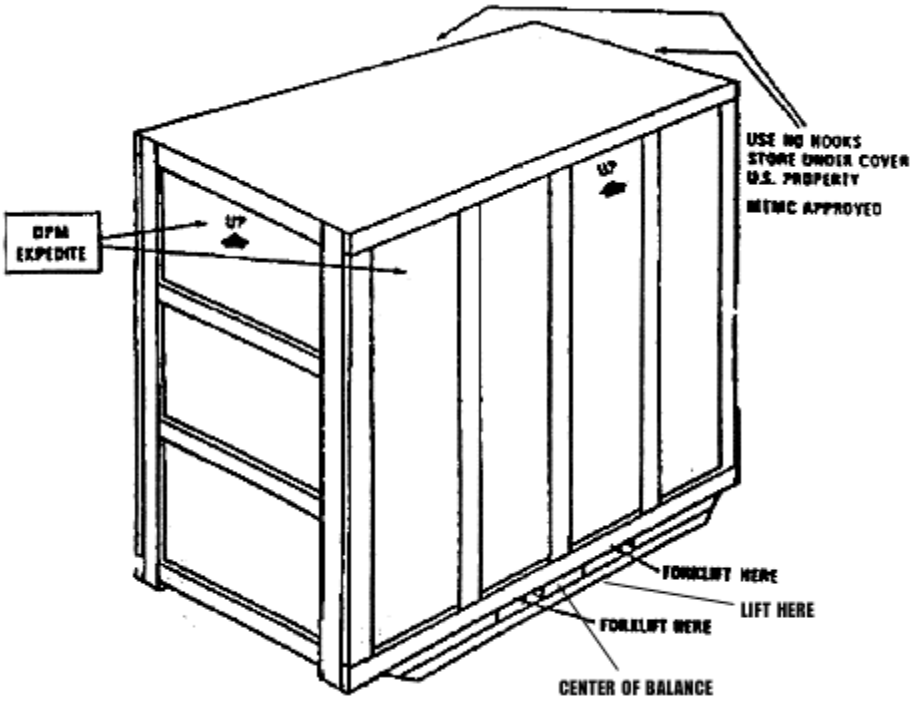

Figure G-4. Location of Permanent Markings on MIL-STD 1489 HHG Box

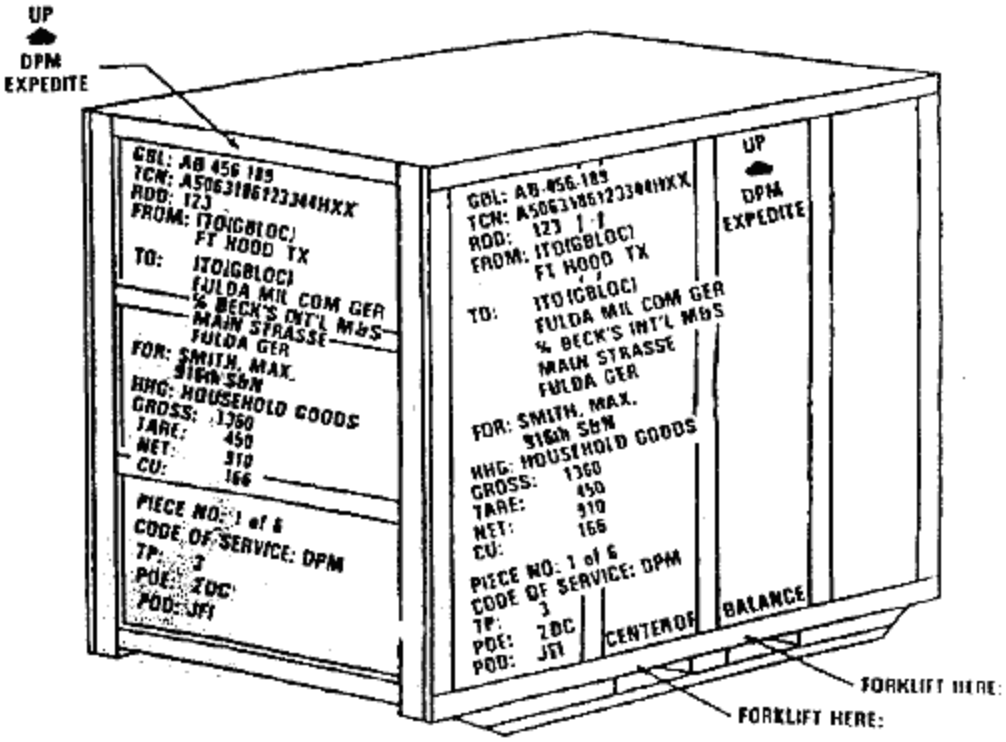

Figure G-5. Container Marking for Household Goods

Figure G-6. Military Shipping Label for Personal Property

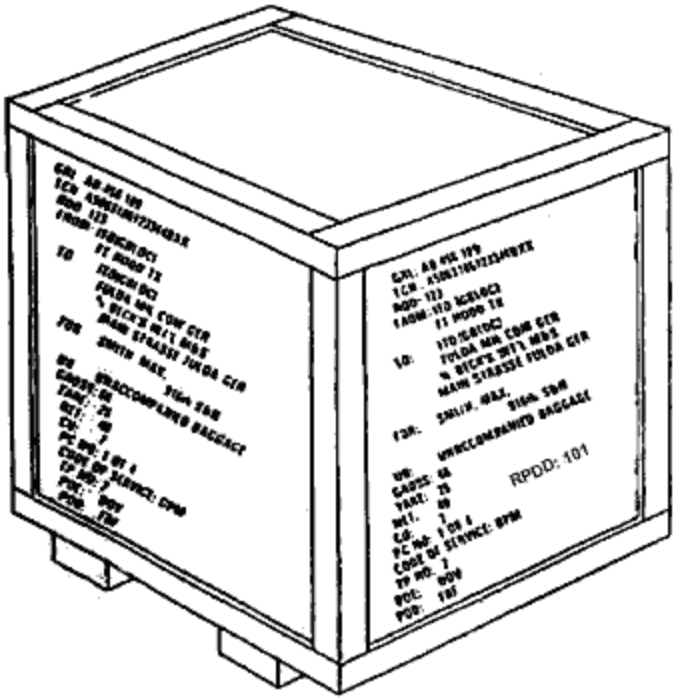

Figure G-7. Markings of Unaccompanied Baggage

JOINT STATEMENT OF LOSS OR DAMAGE AT DELIVERY

Privacy Act Statement

AUTHORITY: The requested information is solicited pursuant to one or more of the following: 5 U.S.C. 301, 31 U.S.C. 3721 et seq., 31 U.S.C. 3711 et seq., and EO 9397, November 1943 (SSN).

PRINCIPLE PURPOSE(S): The information requested is to be used in evaluating claims.

ROUTINE USE(S): The information requested is used in the settlement of claims for loss, damage or destruction of personal property and recovery from liable third parties.

DISCLOSURE: Voluntary; however, failure to supply the requested information or to execute the form may delay or otherwise hinder the payment of your claim.

GENERAL INSTRUCTIONS: The carrier's/contractor's representative will complete and sign DD Form 1840 and obtain the signature of the member or member's agent. The member or member's agent will not, under any circumstances, sign a blank or partially completed DD Form 1840. Three completed copies of DD Form 1840 and blank DD Forms 1840R will be provided the member or member's agent by the carrier's/contractor's representative for each shipment. If no loss or damage is involved, write "NONE" in description column.

SECTION A - GENERAL *(To be completed by carrier/contractor)*

1. NAME OF OWNER *(Last, First, Middle Initial)*	2. SOCIAL SECURITY NO.	3. RANK OR GRADE	4. NET WT OF SHIPMENT

5. ORIGIN OF SHIPMENT *(City and State/Country)*	6. DESTINATION OF SHIPMENT *(City and State/Country)*

7. PPGBL/ORDER NUMBER	8. PICKUP DATE	9. NAME AND ADDRESS OF CARRIER/CONTRACTOR

10. CODE OF SERVICE	11. SCAC	12. CARRIER/CONTR REF. NO.

SECTION B - RECORD OF LOSS OR DAMAGE *(To be completed jointly by member and carrier's/contractor's representative)*

13. Notice is hereby given to the carrier/contractor to whom this statement is surrendered that the shipment was received in condition as shown below and the claim, if any, will be made for such loss or damage as indicated subject to further inspection and notification to the claims office within 70 days by DD Form 1840R found on the reverse side hereof. **THE VALUE INDICATED IN BLOCK 14c IS TO BE USED FOR QUALITY CONTROL ONLY.**

a. Inv. No.	b. Name of item	c. Description of loss or damage *(If missing, so indicate)*

14. ACKNOWLEDGMENT BY MEMBER OR AGENT *(X and complete as applicable and sign below)*

a. I received my property in apparently good condition except as indicated above. A continuation sheet [ ] was [ ] was not used.

b. Unpacking and removal of packing material, boxes, cartons, and other debris [ ] is [ ] is not waived.

c. I estimate the amount of my loss and/or damage at $

d. I have received three copies of this form. **I understand that I have 70 days to list any further loss and/or damages on the back of this form and give this to the nearest claims office, and that failure to do so may result in my being paid a smaller amount on a claim.**

e. Telephone Number | f. Date Signed

g. Signature

15. ACKNOWLEDGMENT BY CARRIER'S/CONTRACTOR'S REPRESENTATIVE *(X and complete as applicable and sign below)*

[ ] a. Property was delivered in apparently good condition except as otherwise noted above.

[ ] b. I will initiate tracer action for missing items.

c. Name of delivering carrier/agent/contractor

d. Storage in transit? [ ] Yes [ ] No

e. Signature | f. Date Signed

DD Form 1840, JAN 88 *Previous editions are obsolete* PAGE OF PAGES

Figure G-8. Joint Statement of Loss and Damage at Delivery (DD Form 1840)

NOTICE OF LOSS OR DAMAGE

INSTRUCTIONS TO MEMBER: You have up to 70 days to inspect your property and note all loss or damage. Should you find any loss or damage not reported on DD Form 1840 at the time of delivery, complete Section A below. Use only ball-point pen or typewriter. **THE COMPLETED FORM MUST BE DELIVERED TO YOUR LOCAL CLAIMS OFFICE NOT LATER THAN 70 DAYS FROM DATE OF DELIVERY. FAILURE TO DO SO MAY RESULT IN A REDUCTION OF THE AMOUNT PAYABLE ON YOUR CLAIM.** Keep a copy of this form for your records, receipted and dated by the claims office. If more than one page is needed, please number the pages.

SECTION A - *(To be completed by member)*

1. STATEMENT OF PROPERTY LOSS OR DAMAGE: You are hereby notified of the loss or damage in the following shipment of personal property.

a. Name of Member *(Last, First, Middle Initial)*	b. PPGBL/Order Number	c. Date of Delivery

d. Origin of Shipment *(City and State/Country)*	e. Destination of Shipment *(City and State/Country)*

f. You are further notified that property owner intends to present a claim for this loss and/or damage. You are hereby extended an opportunity to inspect the property.

2. LIST OF PROPERTY LOSS / DAMAGE *(NOTE: Tracer action is requested for items listed as missing)*

a. Inv. No.	b. Name of Item	c. General Description of Loss or Damage *(If missing, so indicate)*

SECTION B - *(To be completed by claims office)*
(NOTE: Mail original to home office of carrier / contractor listed in item 9 on DD Form 1840)

3. TO *(Home Office of Carrier/Contractor)*

a. Name and Address *(Street Address, City, State, and ZIP Code)*	b. Date of Dispatch

4. YOUR REPRESENTATIVE MAY CONTACT THIS CLAIMS OFFICE FOR ASSISTANCE

a. Name and Address of Claims Officer	b. Signature	
	c. Date Signed	d. Telephone Number

DD Form 1840R, JAN 88 *Previous editions are obsolete.* PAGE OF PAGES

Figure G-9. Notice of Loss or Damage (DD Form 1840R)

TRANSPORTATION CONTROL AND MOVEMENT DOCUMENT | PAGE NO.

1. DOC ID	2. TRLR CTR	3. CONSIGNOR	4. COMMODITY SPECIAL HANDLING	5. AIR DIM	6. POE			7. POD	
8. MODE	9. PACK	10. TRANSPORTATION CONTROL NO.	11. CONSIGNEE	12. PRI	13. RDD	14. PROJ	15. DATE SHPD	16. ETA	17. TR ACCT
18. CARRIER		19. FLIGHT-TRUCK-VOY-DOC NO	20. REF	21. REMARKS			22. PIECES	23. WEIGHT	24. CUBE

a. Transship Point	b. Date Rec	c. Bay Whse	d. Date Shpd	e. Mode Carrier	f. Flight-Truck-Voy Doc No.	g. Ref	h. Stow Loc	i. Split	j. Cond	k. Signature-Remarks
25.										
26.										
27.										

28. CONSIGNEE	29. DATE RECEIVED/OFFERED (Sign)	30. CONDITION	31. REMARKS

32. DOC ID	33. TRAILER - CON-TAINER	34. CONSIGNOR COMM ABBR OTHER	35. COMMODITY SPECIAL HANDLING	36. VOY NO Air Dim a.	36. VOY NO POE b.	37. POD	38. MODE	39. TYPE PACK	40. TRANSPORTATION CONTROL NUMBER	41. CONSIGNEE	42. PRI	43. REMARKS AND/OR RDD a.	Proj b.	Stow Loc Shpd c.	Stow Loc ETA d.	Tac e.	44. ADDITIONAL REMARKS OR Pieces a.	Weight b.	Cube c.

DD FORM 1384, OCT 2000 PREVIOUS EDITIONS MAY BE USED.

Figure G-10. Transportation Control and Movement Document (DD Form 1384)

Attachment 2

Publications and Commercial Standards

The publications below have been coded as mandatory or advisory. The contractor is obligated to follow those coded as mandatory. The contractor must be guided by those publications coded "advisory" to the extent necessary to accomplish requirements in the Performance Work Statement. Each applies to the current edition, unless otherwise specified.

SPECIFICATION	TITLE	MANDATORY	ADVISORY
ASTM-D4169-01	Standard Practice for Performance Testing of Shipping Containers and Systems	X	
ASTM-D5168-98	Standard Practice for Fabrication and Closure of Triple Wall Corrugated Fiberboard Containers	X	
ASTM-D6039/D6039M-96	Standard Specification for Crates, Wood, Open and Covered	X	
PPP-C-1797A	Cushioning Material, Resilient, Low Density, Unicellular Poly-propylene Foam		X
ASTM-D3953-97	Standard Specification for Strapping, Flat Steel and Seals		X
DOD 4500.9-R	Defense Transportation Regulation, Part IV, Personal Property	X	
MTMC PAMPHLET 55-12	Commercial Containers for Department of Defense Household Goods Shipments		X

NOTE: All publications marked as Mandatory will be maintained at contractor's facilities.

Copies of Government publications may be obtained by submitting a written request to:

Defense Automated Printing Service
700 Robbins Avenue
Building 4, Section D
Philadelphia, PA 19111 5904
Facsimile: DSN 442 1462 or (215) 697 1462
Telephone Number: DSN 442-2179 or (215) 697 2179
Internet: http://www.dodssp.daps.mil

Copies of commercial standards may be obtained by submitting a written request to:

American Society of Testing and Materials
100 Barr Harbor Drive
West Conshohocken, PA 19428-2959
Telephone Number: (610) 832-9585
Facsimile: (610) 832-9555

The request must contain the title of the specification, its number, and date. Supplements or amendments to these mandatory publications may be issued during the life of the contract and must be in full force and effect as soon as possible but not later than 30 days after receipt by the contractor. Changes in the contract price due to publication supplements and amendments may be considered under the Changes clause.

Attachment 3

Contractor Documents Requirement Listings

Contractor's Quality Control Program. See Contract Data Requirements List (CDRL) and Data Item Description, Number 0001.

Weight Tickets. See CDRL and Data Item Description, Number 0002.

Household Goods Descriptive Inventory. See CDRL and Data Item Description, Number 0003.

Exception Sheet. See CDRL and Data Item Description, Number 0004.

Report of Government Owned Containers. See CDRL and Data Item Description, Number 0005.

Joint Statement of Loss and Damage at Delivery. See CDRL and Data Item Description, Number 0006.

Claims Correspondence. See CDRL and Data Item Description, Number 0007.

Government Bill of Lading. See CDRL and Data Item Description, Number 0008.

Contractor's Weekly Report. See CDRL and Data Item Description, Number 0009.

Report of Shipments On-Hand. See CDRL and Data Item Description, Number 0010.

Outsized Air Cargo Report. See CDRL and Data Item Description, Number 0011.

Monthly SDS Metrics Report. See CDRL and Data Item Description, Number 0012.

The following abbreviations and their meanings are used in the CDRL and Data Item Description.

ASREQ	-	As Required
COR	-	Contracting Officer
DAC	-	Day after contract start
DS	-	Destination
EAS	-	Each shipment
MTHLY	-	Monthly
N/A	-	Not applicable
ONE/R	-	One time with revisions
PPSO	-	Personal Property Shipping Office
QTRLY	-	Quarterly
WKLY	-	Weekly

CONTRACT DATA REQUIREMENTS LIST

Form Approved
OMB No. 0704-0188

The public reporting burden for this collection of information is estimated to average 440 hours per response, including the time for reviewing instructions, searching existing data sources, gathering and maintaining the data needed, and completing and reviewing the collection of information. Send comments regarding this burden estimate or any other aspect of collecting of information, including suggestions for reducing the burden, to Department of Defense, Washington Headquarters Services, Directorate for Information Operations and Reports (0704-0188), 1215 Jefferson Davis Highway, Suite 1204, Arlington, VA 22202-4302. Respondents should be aware that notwithstanding any other provision of law, no person must be subject to any penalty for failing to comply with a collection of information if it does not display a currently valid OMB control number. Please DO NOT RETURN your form to the above address. Send completed form to the Government Issuing Contracting Officer for the Contract/PR No. listed in Block E.

A. CONTRACT LINE ITEM NO.	B. EXHIBIT	C. CATEGORY: TDP _____ TM _____ OTHER _____
D. SYSTEM/ITEM	E. CONTRACT/PR NO.	F. CONTRACTOR

1. Data Item No.	2. Title of Data Item	3. Subtitle	17. Price Group
0001	Contractor's Quality Control Program		
4. Authority (Data Acquisition Document No.)	5. Contract Reference	6. Requiring Office	18. Est. Total
	Part 3, Para.5.a	COR	
7. DD 250 Req	9. Dist Statement Required	10. Frequency	12. Date of 1st Submission
DS		One/R	
8. App Code		11. As of Date	13. Subsequent Submit
		N/A	

14. Distribution

a. Addressee	b. Copies	Final Reg	Final Rep
15. Total			

16. Remarks
Basic version submitted at preaward survey conference. Updated version submitted on contract start date. Schedule I, II, and III.

1. Data Item No.	2. Title of Data Item	3. Subtitle	17. Price Group
0002	Weight Tickets		
4. Authority (Data Acquisition Document No.)	5. Contract Reference	6. Requiring Office	18. Est. Total
	Part 1, Para A.2.b.	COR	
7. DD 250 Req	9. Dist Statement Required	10. Frequency	12. Date of 1st Submission
DS		EAS	
8. App Code		11. As of Date	13. Subsequent Submit
		N/A	

14. Distribution

a. Addressee	b. Copies	Final Reg	Final Rep
15. Total			

16. Remarks
Weight tickets not required on inbound shipments unless reweigh is ordered. Schedule I, II, and III.

1. Data Item No.	2. Title of Data Item	3. Subtitle	17. Price Group
0003	Household Goods Descriptive Inventory		
4. Authority (Data Acquisition Document No.)	5. Contract Reference	6. Requiring Office	18. Est. Total
	Part 1, Para A.5.i	COR	
7. DD 250 Req	9. Dist Statement Required	10. Frequency	12. Date of 1st Submission
DS		EAS	
8. App Code		11. As of Date	13. Subsequent Submit
		N/A	

14. Distribution

a. Addressee	b. Copies	Final Reg	Final Rep
15. Total			

16. Remarks
Inventories not required on inbound shipments. Schedule I and III.

1. Data Item No.	2. Title of Data Item	3. Subtitle	17. Price Group
0004	Exception Sheet		
4. Authority (Data Acquisition Document No.)	5. Contract Reference	6. Requiring Office	18. Est. Total
	Part 1, Para A.5.l	COR	
7. DD 250 Req	9. Dist Statement Required	10. Frequency	12. Date of 1st Submission
DS		See 16	
8. App Code		11. As of Date	13. Subsequent Submit
		See 16	

14. Distribution

a. Addressee	b. Copies	Final Reg	Final Rep
15. Total			

16. Remarks
Exception sheets are made on shipments from NTS when contractor's representative and storage contractor's representative disagree on condition of goods. Maintained in contractor's file and made available to claims office.

G. PREPARED BY	H. DATE	I. APPROVED BY	J. DATE

CONTRACT DATA REQUIREMENTS LIST

Form Approved
OMB No. 0704-0188

The public reporting burden for this collection of information is estimated to average 440 hours per response, including the time for reviewing instructions, searching existing data sources, gathering and maintaining the data needed, and completing and reviewing the collection of information. Send comments regarding this burden estimate or any other aspect of collecting of information, including suggestions for reducing the burden, to Department of Defense, Washington Headquarters Services, Directorate for Information Operations and Reports (0704-0188), 1215 Jefferson Davis Highway, Suite 1204, Arlington, VA 22202-4302. Respondents should be aware that notwithstanding any other provision of law, no person must be subject to any penalty for failing to comply with a collection of information if it does not display a currently valid OMB control number. Please DO NOT RETURN your form to the above address. Send completed form to the Government Issuing Contracting Officer for the Contract/PR No. listed in Block E.

A. CONTRACT LINE ITEM NO.	B. EXHIBIT	C. CATEGORY: TDP _____ TM _____ OTHER _____
D. SYSTEM/ITEM	E. CONTRACT/PR NO.	F. CONTRACTOR

1. Data Item No. 0005	2. Title of Data Item Report of Government Owned Containers			3. Subtitle				17. Price Group
4. Authority (Data Acquisition Document No.)		5. Contract Reference Part 1, Para A.7.g.(2)		6. Requiring Office COR				18. Est. Total
7. DD 250 Req DS	9. Dist Statement Required	10. Frequency See 16	12. Date of 1st Submission	14. Distribution				
8. App Code		11. As of Date See 16	13. Subsequent Submit	a. Addressee	b. Copies	Final Reg	Final Rep	
16. Remarks Initial report due 15 days after contract start date. Subsequent reports are due the first workday of each month. Schedule I and III.								
				15. Total				

1. Data Item No. 0006	2. Title of Data Item Joint Statement of Loss & Damage at Delivery			3. Subtitle				17. Price Group
4. Authority (Data Acquisition Document No.)		5. Contract Reference Part 1, Para A.12.c.(1)		6. Requiring Office COR				18. Est. Total
7. DD 250 Req DS	9. Dist Statement Required	10. Frequency See 16	12. Date of 1st Submission	14. Distribution				
8. App Code		11. As of Date See 16	13. Subsequent Submit	a. Addressee	b. Copies	Final Reg	Final Rep	
16. Remarks DD Form 1840. Schedule II and III.								
				15. Total				

1. Data Item No. 0007	2. Title of Data Item Claims Correspondence			3. Subtitle				17. Price Group
4. Authority (Data Acquisition Document No.)		5. Contract Reference Part 1, Para A.13.		6. Requiring Office COR				18. Est. Total
7. DD 250 Req DS	9. Dist Statement Required	10. Frequency See 16	12. Date of 1st Submission	14. Distribution				
8. App Code		11. As of Date N/A	13. Subsequent Submit	a. Addressee	b. Copies	Final Reg	Final Rep	
16. Remarks Each time any correspondence regarding a claim is received from anyone other than the local TO, the contractor must furnish the TO an information copy. Schedule I, II, and III.								
				15. Total				

1. Data Item No. 0008	2. Title of Data Item Government Bill of Lading			3. Subtitle				17. Price Group
4. Authority (Data Acquisition Document No.)		5. Contract Reference Part 1, Para A.8.d		6. Requiring Office COR				18. Est. Total
7. DD 250 Req DS	9. Dist Statement Required	10. Frequency See 16	12. Date of 1st Submission	14. Distribution				
8. App Code		11. As of Date N/A	13. Subsequent Submit	a. Addressee	b. Copies	Final Reg	Final Rep	
16. Remarks Original and copies 2, 3, and 4 are given to the carrier. Copies 5, 6, and 7 to the TO and copy 8 maintained by the contractor. In instances where computer generated PPGBLs are used, enough copies must be made to ensure the right number of copies will be submitted.								
				15. Total				

G. PREPARED BY	H. DATE	I. APPROVED BY	J. DATE

CONTRACT DATA REQUIREMENTS LIST

Form Approved
OMB No. 0704-0188

The public reporting burden for this collection of information is estimated to average 440 hours per response, including the time for reviewing instructions, searching existing data sources, gathering and maintaining the data needed, and completing and reviewing the collection of information. Send comments regarding this burden estimate or any other aspect of collecting of information, including suggestions for reducing the burden, to Department of Defense, Washington Headquarters Services, Directorate for Information Operations and Reports (0704-0188), 1215 Jefferson Davis Highway, Suite 1204, Arlington, VA 22202-4302. Respondents should be aware that notwithstanding any other provision of law, no person must be subject to any penalty for failing to comply with a collection of information if it does not display a currently valid OMB control number. Please DO NOT RETURN your form to the above address. Send completed form to the Government Issuing Contracting Officer for the Contract/PR No. listed in Block E.

A. CONTRACT LINE ITEM NO.	B. EXHIBIT	C. CATEGORY: TDP _____ TM _____ OTHER _____
D. SYSTEM/ITEM	E. CONTRACT/PR NO.	F. CONTRACTOR

1. Data Item No.	2. Title of Data Item	3. Subtitle	17. Price Group
0009	Contractor's Weekly Report		
4. Authority (Data Acquisition Document No.)	5. Contract Reference	6. Requiring Office	18. Est. Total
	Part 1, Para A.8.j	COR	
7. DD 250 Req	9. Dist Statement Required	10. Frequency	12. Date of 1st Submission
DS		WKLY	
8. App Code		11. As of Date	13. Subsequent Submit
		See 16	

14. Distribution

a. Addressee	b. Copies	Final Reg	Final Rep
15. Total			

16. Remarks
Block 11 - Day of submission
Block 12 - First Monday after contract start date
Schedule I

1. Data Item No.	2. Title of Data Item	3. Subtitle	17. Price Group
0010	Report of Shipments on Hand		
4. Authority (Data Acquisition Document No.)	5. Contract Reference	6. Requiring Office	18. Est. Total
	Part 1, Para A.9.h	COR	
7. DD 250 Req	9. Dist Statement Required	10. Frequency	12. Date of 1st Submission
DS		See 16	
8. App Code		11. As of Date	13. Subsequent Submit
		See 16	

14. Distribution

a. Addressee	b. Copies	Final Reg	Final Rep
15. Total			

16. Remarks
Blocks 10 & 11 - Determined by the TO
Negative reports are required. Should identify when reports are submitted to TO
Schedule II

1. Data Item No.	2. Title of Data Item	3. Subtitle	17. Price Group
0011	Outsized Air Cargo Report		
4. Authority (Data Acquisition Document No.)	5. Contract Reference	6. Requiring Office	18. Est. Total
	Part 1, Para A.8.g	COR	
7. DD 250 Req	9. Dist Statement Required	10. Frequency	12. Date of 1st Submission
DS		See 16	
8. App Code		11. As of Date	13. Subsequent Submit
		See 16	

14. Distribution

a. Addressee	b. Copies	Final Reg	Final Rep
15. Total			

16. Remarks
Schedule I

1. Data Item No.	2. Title of Data Item	3. Subtitle	17. Price Group
0012	Monthly SDS Metrics Report		
4. Authority (Data Acquisition Document No.)	5. Contract Reference	6. Requiring Office	18. Est. Total
	Part 3, Para 5.b		
7. DD 250 Req	9. Dist Statement Required	10. Frequency	12. Date of 1st Submission
DS		MTHLY	
8. App Code		11. As of Date	13. Subsequent Submit
		N/A	

14. Distribution

a. Addressee	b. Copies	Final Reg	Final Rep
15. Total			

16. Remarks
Schedule I, II, and III.

G. PREPARED BY	H. DATE	I. APPROVED BY	J. DATE

DATA ITEM DESCRIPTION	Form Approved OMB No. 0704-0188

The public reporting burden for this collection of information is estimated to average 110 hours per response including the time for reviewing instructions, searching existing data sources, gathering and maintaining the data needed, and competing and reviewing the collection of information. Send comments regarding this burden estimate or any other aspect of this collection of information including suggestions for reducing the burden, to Department of Defense Washington Headquarters Services, Directorate for Information Operations and Reports (0704-0188), 1215 Jefferson Davis Highway, Suite 1204, Arlington VA 22202-4302. Respondents should be aware that notwithstanding any other provision of law, no person shall be subject to any penalty for failing to comply with a collection of information if it does not display a currently valid OMB control number. **PLEASE DO NOT RETURN YOUR FORM TO THE ABOVE ADDRESS**.

1. TITLE	2. IDENTIFICATION NUMBER
CONTRACTOR'S QUALITY CONTROL PROGRAM	0001

3. DESCRIPTION/PURPOSE

The contractor must provide a quality control program that includes an inspection system for services listed in the required services chart (RSC), specifying the areas to be inspected, when and by whom. It must also identify questionable services before performance becomes unsatisfactory. It must describe the method used in recording the quality control inspection results and disposition of these inspection records.

4. APPROVAL DATE (YYYYMMDD)	5. OFFICE OF PRIMARY RESPONSIBILITY (OPR)	6a. DTIC APPLICABLE	6b. GIDEP APPLICABLE

7. APPLICATION/INTERRELATIONSHIP

The quality control program indicates procedures are available to provide quality performance to the Government.

Schedules I, II and III.

8. APPROVAL LIMITATION	9a. APPLICABLE FORMS	9b. AMSC NUMBER

10. PREPARATION INSTRUCTIONS

Basic version outlining a general approach must be available at the preaward survey conference. Updated version must be submitted by the contract start date.

The quality control plan must contain, as a minimum:

1. Areas to be inspected
2. Inspection schedule
3. Names and titles of individuals performing inspections

11. DISTRIBUTION STATEMENT

Contracting Officer

DD FORM 1664, AUG 96 (EG) PREVIOUS EDITION MAY BE USED. Page ___ of ___ Pages

Designed using Perform Pro WHS/DIOR, Aug 96

DATA ITEM DESCRIPTION	Form Approved OMB No. 0704-0188

The public reporting burden for this collection of information is estimated to average 110 hours per response including the time for reviewing instructions, searching existing data sources, gathering and maintaining the data needed, and competing and reviewing the collection of information. Send comments regarding this burden estimate or any other aspect of this collection of information including suggestions for reducing the burden, to Department of Defense Washington Headquarters Services, Directorate for Information Operations and Reports (0704-0188), 1215 Jefferson Davis Highway, Suite 1204, Arlington VA 22202-4302. Respondents should be aware that notwithstanding any other provision of law, no person shall be subject to any penalty for failing to comply with a collection of information if it does not display a currently valid OMB control number. **PLEASE DO NOT RETURN YOUR FORM TO THE ABOVE ADDRESS**.

1. TITLE	2. IDENTIFICATION NUMBER
WEIGHT TICKETS	0002

3. DESCRIPTION/PURPOSE

Weight tickets, properly certified, IAW, State, Commonwealth, or District Regulations are required to support billings for payment.

4. APPROVAL DATE (YYYYMMDD)	5. OFFICE OF PRIMARY RESPONSIBILITY (OPR)	6a. DTIC APPLICABLE	6b. GIDEP APPLICABLE

7. APPLICATION/INTERRELATIONSHIP

Verification of weight of shipments. Weight tickets are not required on inbound shipments unless a reweigh is ordered.

Schedules I, II and III.

8. APPROVAL LIMITATION	9a. APPLICABLE FORMS	9b. AMSC NUMBER

10. PREPARATION INSTRUCTIONS

Weight tickets must be certified and prepared in duplicate and must contain the following:

1. Name and address of the weighing station
2. Date of weighing
3. Contractor's name
4. Van or trailer number
5. Name of property member/employee
6. Signature of weighmaster
7. Order number

11. DISTRIBUTION STATEMENT

TO

DD FORM 1664, AUG 96 (EG) PREVIOUS EDITION MAY BE USED. Page ___ of ___ Pages

Designed using Perform Pro WHS/DIOR, Aug 96

DATA ITEM DESCRIPTION	Form Approved OMB No. 0704-0188

The public reporting burden for this collection of information is estimated to average 110 hours per response including the time for reviewing instructions, searching existing data sources, gathering and maintaining the data needed, and competing and reviewing the collection of information. Send comments regarding this burden estimate or any other aspect of this collection of information including suggestions for reducing the burden, to Department of Defense Washington Headquarters Services, Directorate for Information Operations and Reports (0704-0188), 1215 Jefferson Davis Highway, Suite 1204, Arlington VA 22202-4302. Respondents should be aware that notwithstanding any other provision of law, no person shall be subject to any penalty for failing to comply with a collection of information if it does not display a currently valid OMB control number. **PLEASE DO NOT RETURN YOUR FORM TO THE ABOVE ADDRESS**.

1. TITLE	2. IDENTIFICATION NUMBER
HOUSEHOLD GOODS DESCRIPTIVE INVENTORY	0003

3. DESCRIPTION/PURPOSE

To provide an accurate, legible inventory of shipment contents. Identify quantities, cartons, conditions of articles and other information concerning the items shipped. (Part IV, Figure G-1)

4. APPROVAL DATE (YYYYMMDD)	5. OFFICE OF PRIMARY RESPONSIBILITY (OPR)	6a. DTIC APPLICABLE	6b. GIDEP APPLICABLE

7. APPLICATION/INTERRELATIONSHIP

Listing of articles shipped.

Schedules I and III.

8. APPROVAL LIMITATION	9a. APPLICABLE FORMS	9b. AMSC NUMBER

10. PREPARATION INSTRUCTIONS

11. DISTRIBUTION STATEMENT

Schedule I: TO – Original; Member/Employee – 1 Copy; Contractor – 1 Copy
Shipment: 1 Copy attached to Number One container; 1 Copy placed inside Number One container
Schedule III: TO – Original; Member/Employee – 1 Copy; Contractor – 1 Copy

DD FORM 1664, AUG 96 (EG) PREVIOUS EDITION MAY BE USED. Page ___ of ___ Pages

Designed using Perform Pro WHS/DIOR, Aug 96

DATA ITEM DESCRIPTION	Form Approved OMB No. 0704-0188

The public reporting burden for this collection of information is estimated to average 110 hours per response including the time for reviewing instructions, searching existing data sources, gathering and maintaining the data needed, and competing and reviewing the collection of information. Send comments regarding this burden estimate or any other aspect of this collection of information including suggestions for reducing the burden, to Department of Defense Washington Headquarters Services, Directorate for Information Operations and Reports (0704-0188), 1215 Jefferson Davis Highway, Suite 1204, Arlington VA 22202-4302. Respondents should be aware that notwithstanding any other provision of law, no person shall be subject to any penalty for failing to comply with a collection of information if it does not display a currently valid OMB control number. **PLEASE DO NOT RETURN YOUR FORM TO THE ABOVE ADDRESS**.

1. TITLE	2. IDENTIFICATION NUMBER
EXCEPTION SHEET	0004

3. DESCRIPTION/PURPOSE

To record the difference in the condition of items being removed from nontemporary storage.

4. APPROVAL DATE (YYYYMMDD)	5. OFFICE OF PRIMARY RESPONSIBILITY (OPR)	6a. DTIC APPLICABLE	6b. GIDEP APPLICABLE

7. APPLICATION/INTERRELATIONSHIP

Schedules I and II.

8. APPROVAL LIMITATION	9a. APPLICABLE FORMS	9b. AMSC NUMBER

10. PREPARATION INSTRUCTIONS

Prepare only when different conditions are noted from the nontemporary storage inventory. When contractor''s representative and storage contractor's representative differ, enter both opinions, separately identifying source. Both parties must sign and date the exception sheet. The exception sheets are maintained in the contractor''s files. A copy will be furnished to the claims office, upon request.

11. DISTRIBUTION STATEMENT

As Required

DD FORM 1664, AUG 96 (EG) PREVIOUS EDITION MAY BE USED. Page ___ of ___ Pages

Designed using Perform Pro WHS/DIOR, Aug 96

DATA ITEM DESCRIPTION	Form Approved OMB No. 0704-0188

The public reporting burden for this collection of information is estimated to average 110 hours per response including the time for reviewing instructions, searching existing data sources, gathering and maintaining the data needed, and competing and reviewing the collection of information. Send comments regarding this burden estimate or any other aspect of this collection of information including suggestions for reducing the burden, to Department of Defense Washington Headquarters Services, Directorate for Information Operations and Reports (0704-0188), 1215 Jefferson Davis Highway, Suite 1204, Arlington VA 22202-4302. Respondents should be aware that notwithstanding any other provision of law, no person shall be subject to any penalty for failing to comply with a collection of information if it does not display a currently valid OMB control number. **PLEASE DO NOT RETURN YOUR FORM TO THE ABOVE ADDRESS**.

1. TITLE	2. IDENTIFICATION NUMBER
EXCEPTION SHEET	0005

3. DESCRIPTION/PURPOSE

Report how many Government-owned containers are available at the contractor's facility.

4. APPROVAL DATE (YYYYMMDD)	5. OFFICE OF PRIMARY RESPONSIBILITY (OPR)	6a. DTIC APPLICABLE	6b. GIDEP APPLICABLE

7. APPLICATION/INTERRELATIONSHIP

To determine accountability and location of Government-owned containers.

Schedules I and II.

8. APPROVAL LIMITATION	9a. APPLICABLE FORMS	9b. AMSC NUMBER

10. PREPARATION INSTRUCTIONS

Report is submitted to the TO fifteen days after the contract start date and the first workday of each month thereafter. The report will reflect the following information but not limited to:

1. Number received during reporting period with member's name for each container.
2. Number of containers disposed of during the period of report (showing specific disposition).
3. Total number of containers on hand as of the end of the reporting period to include:
   a. Number of serviceable containers, by type
   b. Number of unserviceable containers, by type

NOTE: Initial report of containers received from previous contractor need not show member's name.

For Air Force installations AF Form 384, Government-Owned Container Control Record, should be used.
The TO will furnish the form for the contractor's use.

11. DISTRIBUTION STATEMENT

TO

DATA ITEM DESCRIPTION	Form Approved OMB No. 0704-0188

The public reporting burden for this collection of information is estimated to average 110 hours per response including the time for reviewing instructions, searching existing data sources, gathering and maintaining the data needed, and competing and reviewing the collection of information. Send comments regarding this burden estimate or any other aspect of this collection of information including suggestions for reducing the burden, to Department of Defense Washington Headquarters Services, Directorate for Information Operations and Reports (0704-0188), 1215 Jefferson Davis Highway, Suite 1204, Arlington VA 22202-4302. Respondents should be aware that notwithstanding any other provision of law, no person shall be subject to any penalty for failing to comply with a collection of information if it does not display a currently valid OMB control number. **PLEASE DO NOT RETURN YOUR FORM TO THE ABOVE ADDRESS**.

1. TITLE	2. IDENTIFICATION NUMBER
JOINT STATEMENT OF LOSS AND DAMAGE AT DELIVERY	0006

3. DESCRIPTION/PURPOSE

To record loss and/or damage at the time of delivery to the member. (Part IV, Fig G-8)

4. APPROVAL DATE (YYYYMMDD)	5. OFFICE OF PRIMARY RESPONSIBILITY (OPR)	6a. DTIC APPLICABLE	6b. GIDEP APPLICABLE

7. APPLICATION/INTERRELATIONSHIP

Used as proof of delivery and as supporting documentation for a claim.

Schedules II and III.

8. APPROVAL LIMITATION	9a. APPLICABLE FORMS	9b. AMS C NUMBER

10. PREPARATION INSTRUCTIONS

Schedule I and III:

A DD Form 1840 will be prepared to indicate the loss and/or damage revealed during unloading/unpacking. The contractor and member/employee must jointly sign the form upon completion. If available, the member/employee's copy of the inventory prepared at origin or the copy from the number one container must be used to check count and condition.

11. DISTRIBUTION STATEMENT

Property Member/Employee – 3 Copies
Ordering Officer – 1 Copy
Contractor – 1 Copy

DD FORM 1664, AUG 96 (EG) PREVIOUS EDITION MAY BE USED. Page ___ of ___ Pages

Designed using Perform Pro WHS/DIOR, Aug 96

DATA ITEM DESCRIPTION	Form Approved OMB No. 0704-0188

The public reporting burden for this collection of information is estimated to average 110 hours per response including the time for reviewing instructions, searching existing data sources, gathering and maintaining the data needed, and competing and reviewing the collection of information. Send comments regarding this burden estimate or any other aspect of this collection of information including suggestions for reducing the burden, to Department of Defense Washington Headquarters Services, Directorate for Information Operations and Reports (0704-0188), 1215 Jefferson Davis Highway, Suite 1204, Arlington VA 22202-4302. Respondents should be aware that notwithstanding any other provision of law, no person shall be subject to any penalty for failing to comply with a collection of information if it does not display a currently valid OMB control number. **PLEASE DO NOT RETURN YOUR FORM TO THE ABOVE ADDRESS**.

1. TITLE	2. IDENTIFICATION NUMBER
CLAIMS CORRESPONDENCE	0007

3. DESCRIPTION/PURPOSE

A copy of any correspondence concerning a claim,that is received by the contractor from anyone other than the local TO.

4. APPROVAL DATE (YYYYMMDD)	5. OFFICE OF PRIMARY RESPONSIBILITY (OPR)	6a. DTIC APPLICABLE	6b. GIDEP APPLICABLE

7. APPLICATION/INTERRELATIONSHIP

Informs the PPSO of a pending claim.

Schedules I, II and III.

8. APPROVAL LIMITATION	9a. APPLICABLE FORMS	9b. AMSC NUMBER

10. PREPARATION INSTRUCTIONS

At the time a claim is received by the contractor, the contractor records the date of receipt on the claim and furnishes a copy of all correspondence regarding the claim to the PPSO within ten workdays.

11. DISTRIBUTION STATEMENT

TO

DD FORM 1664, AUG 96 (EG) PREVIOUS EDITION MAY BE USED. Page ___ of ___ Pages

Designed using Perform Pro WHS/DIOR, Aug 96

DATA ITEM DESCRIPTION	Form Approved OMB No. 0704-0188

The public reporting burden for this collection of information is estimated to average 110 hours per response including the time for reviewing instructions, searching existing data sources, gathering and maintaining the data needed, and competing and reviewing the collection of information. Send comments regarding this burden estimate or any other aspect of this collection of information including suggestions for reducing the burden, to Department of Defense Washington Headquarters Services, Directorate for Information Operations and Reports (0704-0188), 1215 Jefferson Davis Highway, Suite 1204, Arlington VA 22202-4302. Respondents should be aware that notwithstanding any other provision of law, no person shall be subject to any penalty for failing to comply with a collection of information if it does not display a currently valid OMB control number. **PLEASE DO NOT RETURN YOUR FORM TO THE ABOVE ADDRESS**.

1. TITLE	2. IDENTIFICATION NUMBER
GOVERNMENT BILL OF LADING	0008

3. DESCRIPTION/PURPOSE

A document issued by the Government to procure transportation and related shipment services.

4. APPROVAL DATE (YYYYMMDD)	5. OFFICE OF PRIMARY RESPONSIBILITY (OPR)	6a. DTIC APPLICABLE	6b. GIDEP APPLICABLE

7. APPLICATION/INTERRELATIONSHIP

Used for linehaul freight movement of personal property.

Schedule I.

8. APPROVAL LIMITATION	9a. APPLICABLE FORMS	9b. AMSC NUMBER

10. PREPARATION INSTRUCTIONS

The following information will be typed by the contractor in the blocks as indicated below:

1. Block 26 – Enter the number and kind of containers, such as 1 F/L, 2 CINS, etc.
2. Block 2 – Enter the aggregate weight and cube of the total number of each different type of container shown in Block 26.
3. Block 28 – Enter the total gross weight of the shipment and when available, total tare and net weight.

11. DISTRIBUTION STATEMENT

Contractor surrenders the original and copies 2, 3 and 4 to the carrier. Contractor returns copies 5, 6 and 7, signed by the carrier, to the TO. The contractor maintains copy 8. In instances where computer generated documents are used, enough copies must be made to ensure the right number of copies will be submitted.

DATA ITEM DESCRIPTION

Form Approved
OMB No. 0704-0188

The public reporting burden for this collection of information is estimated to average 110 hours per response including the time for reviewing instructions, searching existing data sources, gathering and maintaining the data needed, and competing and reviewing the collection of information. Send comments regarding this burden estimate or any other aspect of this collection of information including suggestions for reducing the burden, to Department of Defense Washington Headquarters Services, Directorate for Information Operations and Reports (0704-0188), 1215 Jefferson Davis Highway, Suite 1204, Arlington VA 22202-4302. Respondents should be aware that notwithstanding any other provision of law, no person shall be subject to any penalty for failing to comply with a collection of information if it does not display a currently valid OMB control number. **PLEASE DO NOT RETURN YOUR FORM TO THE ABOVE ADDRESS**.

1. TITLE

CONTRACTOR'S WEEKLY REPORT

2. IDENTIFICATION NUMBER

0009

3. DESCRIPTION/PURPOSE

Report advises the TO of outbound shipments on hand which were picked up prior to the previous Wednesday.

4. APPROVAL DATE (YYYYMMDD)	5. OFFICE OF PRIMARY RESPONSIBILITY (OPR)	6a. DTIC APPLICABLE	6b. GIDEP APPLICABLE

7. APPLICATION/INTERRELATIONSHIP

Report is prepared each Monday or next working day if Monday is a holiday.

Negative reports are required.

Schedule I

8. APPROVAL LIMITATION	9a. APPLICABLE FORMS	9b. AMSC NUMBER

10. PREPARATION INSTRUCTIONS

Report must contain:

1. Member's name, rank/grade and SSN
2. Number of days on hand
3. Order number

11. DISTRIBUTION STATEMENT

Original to TO

Copy maintained by contractor

DATA ITEM DESCRIPTION	Form Approved OMB No. 0704-0188

The public reporting burden for this collection of information is estimated to average 110 hours per response including the time for reviewing instructions, searching existing data sources, gathering and maintaining the data needed, and competing and reviewing the collection of information. Send comments regarding this burden estimate or any other aspect of this collection of information including suggestions for reducing the burden, to Department of Defense Washington Headquarters Services, Directorate for Information Operations and Reports (0704-0188), 1215 Jefferson Davis Highway, Suite 1204, Arlington VA 22202-4302. Respondents should be aware that notwithstanding any other provision of law, no person shall be subject to any penalty for failing to comply with a collection of information if it does not display a currently valid OMB control number. **PLEASE DO NOT RETURN YOUR FORM TO THE ABOVE ADDRESS**.

1. TITLE	2. IDENTIFICATION NUMBER
CONTRACTOR'S WEEKLY REPORT	0010

3. DESCRIPTION/PURPOSE

Report advises the TO of outbound shipments on hand which were picked up prior to the previous Wednesday.

4. APPROVAL DATE (YYYYMMDD)	5. OFFICE OF PRIMARY RESPONSIBILITY (OPR)	6a. DTIC APPLICABLE	6b. GIDEP APPLICABLE

7. APPLICATION/INTERRELATIONSHIP

Report is prepared each Monday or next working day if Monday is a holiday.

Negative reports are required.

Schedule II

8. APPROVAL LIMITATION	9a. APPLICABLE FORMS	9b. AMSC NUMBER

10. PREPARATION INSTRUCTIONS

Report must contain:

1. Member's name, rank/grade and SSN
2. Date of receipt
3. Pieces, weight and cube
4. Order number

11. DISTRIBUTION STATEMENT

One copy forwarded to TO

One copy maintained by contractor

DATA ITEM DESCRIPTION	Form Approved OMB No. 0704-0188

The public reporting burden for this collection of information is estimated to average 110 hours per response including the time for reviewing instructions, searching existing data sources, gathering and maintaining the data needed, and competing and reviewing the collection of information. Send comments regarding this burden estimate or any other aspect of this collection of information including suggestions for reducing the burden, to Department of Defense Washington Headquarters Services, Directorate for Information Operations and Reports (0704-0188), 1215 Jefferson Davis Highway, Suite 1204, Arlington VA 22202-4302. Respondents should be aware that notwithstanding any other provision of law, no person shall be subject to any penalty for failing to comply with a collection of information if it does not display a currently valid OMB control number. **PLEASE DO NOT RETURN YOUR FORM TO THE ABOVE ADDRESS**.

1. TITLE	2. IDENTIFICATION NUMBER
OUTSIZED AIR CARGO REPORT	0011

3. DESCRIPTION/PURPOSE

Provides the PPSO the dimensions of outsize air cargo containers for shipments entering the military airlift system.

4. APPROVAL DATE (YYYYMMDD)	5. OFFICE OF PRIMARY RESPONSIBILITY (OPR)	6a. DTIC APPLICABLE	6b. GIDEP APPLICABLE

7. APPLICATION/INTERRELATIONSHIP

Report is prepared on an as required basis.

Schedule I

8. APPROVAL LIMITATION	9a. APPLICABLE FORMS	9b. AMSC NUMBER

10. PREPARATION INSTRUCTIONS

Prepared only on shipments entering the military airlift system that have any containers with an outside measurement greater than 72 inches in any dimension.

11. DISTRIBUTION STATEMENT

One copy forwarded to PPSO

One copy maintained by contractor

DATA ITEM DESCRIPTION

Form Approved
OMB No. 0704-0188

The public reporting burden for this collection of information is estimated to average 110 hours per response including the time for reviewing instructions, searching existing data sources, gathering and maintaining the data needed, and competing and reviewing the collection of information. Send comments regarding this burden estimate or any other aspect of this collection of information including suggestions for reducing the burden, to Department of Defense Washington Headquarters Services, Directorate for Information Operations and Reports (0704-0188), 1215 Jefferson Davis Highway, Suite 1204, Arlington VA 22202-4302. Respondents should be aware that notwithstanding any other provision of law, no person shall be subject to any penalty for failing to comply with a collection of information if it does not display a currently valid OMB control number. **PLEASE DO NOT RETURN YOUR FORM TO THE ABOVE ADDRESS**.

1. TITLE	2. IDENTIFICATION NUMBER
MONTHLY SDS METRICS REPORT	0012

3. DESCRIPTION/PURPOSE

Provides the PPSO a monthly metrics measuring the Service Delivery Summary (SDS) Performance Threshold. These statistics will be used in the monthly evaluation of the contractor and also as a part of the annual performance report.

4. APPROVAL DATE (YYYYMMDD)	5. OFFICE OF PRIMARY RESPONSIBILITY (OPR)	6a. DTIC APPLICABLE	6b. GIDEP APPLICABLE

7. APPLICATION/INTERRELATIONSHIP

Report is prepared on a monthly basis.

Schedule I, II, and III.

8. APPROVAL LIMITATION	9a. APPLICABLE FORMS	9b. AMSC NUMBER

10. PREPARATION INSTRUCTIONS

11. DISTRIBUTION STATEMENT

One copy forwarded to PPSO

One copy maintained by contractor

DD FORM 1664, AUG 96 (EG) PREVIOUS EDITION MAY BE USED. Page ___ of ___ Pages

Designed using Perform Pro WHS/DIOR, Aug 96

ESTIMATED QUANTITIES

The quantities shown by area of performance for each item in this Solicitation are the Government's estimates of requirements, which may be ordered during the period of the contract.

The Government's estimated maximum daily requirements, excluding Saturday, Sunday; National, State, and local holidays are listed below by area of performance within each schedule. Bidders must complete the "Bidder's Guaranteed Daily Capability", which must equal or exceed the Government's minimum acceptable daily capability, for all items within an area of performance for which they submit bids. Failure to do so will render the bid non responsive.

	Government's Estimated Maximum Daily Requirement	Government's Minimum Acceptable Daily Capability	Bidder's Guaranteed Daily Capability
OUTBOUND (Schedule I) Area	NCWT	NCWT	NCWT
INBOUND (Schedule II) Area	NCWT	NCWT	NCWT
INTRA-CITY AREA (Schedule III) Area	NCWT	NCWT	NCWT
(Repeat for each area listed)			

SCHEDULE I

OUTBOUND SERVICES

Item 0001. Complete Service - Outbound (HHG). Services must include premove survey, servicing of appliances, disassembly of furniture, packaging, inventorying, tagging, wrapping, padding, packing and bracing of HHG in Government-owned and furnished shipping containers (Shipping Container Commercial Spec ASTM-D4169-01, MTMC Pamphlet 55-12) at member's/employee's residence, or at contractor's facility when ordered by the contracting officer, properly securing and sealing for shipment, weighing, obliterating old markings, marking, strapping, and drayage of the container within an area of performance. Service must also include loading of shipments on linehaul carrier's equipment at the contractor's facility. When containers will not accommodate all articles of any one lot, loose articles must be packed in the said containers before any over-packed articles are placed therein. Overflow, oversize, and other shipments must be paid for under Item 0003.

Area.....	Estimated Annual Quantity	Unit	Unit Price	Total
AA. At member/employee residence: Container, Commercial Spec ASTM-D4169-01, or MTMC Pamphlet 55-12	_____	NCWT	_____	_____
AB. At contractor's facility: Container, Commercial Spec ASTM-D4169-01, or MTMC Pamphlet 55-12	_____	NCWT	_____	_____

Item 0002. Outbound (HHG From Nontemporary Storage). Service must be the same as Item 0001 above except that: (a) HHG must be picked up at a nontemporary storage facility and transported to contractor's facility; or (b) HHG must be delivered to contractor's facility; and (c) premove survey, servicing of appliances, preliminary packing and accessorial services must not be provided. Overflow articles requiring containerization will be paid for under Item 0003.

Area.....	Estimated Annual Quantity	Unit	Unit Price	Total
AA. Pickup by contractor: Container, Commercial Spec ASTM-D4169-01, or MTMC Pamphlet 55-12	_____	NCWT	_____	_____
AB. Delivered to contractor: Container, Commercial Spec ASTM-D4169-01, or MTMC Pamphlet 55-12	_____	NCWT	_____	_____

Item 0003. Complete Service-Outbound (HHG-Overflow Articles and HHG Shipments requiring other than ASTM-D4169-01 or MTMC Pamphlet 55-12). Service must be the same as Item 0001 or Item 0002 except that the loose articles are drayed to contractor's facility when ordered by the contracting officer for containerization in Government-furnished or contractor-furnished containers. Overflow, other shipments, and oversize containers must be constructed IAW FED SPEC PPP-B-601H, Style A or B. Each container must be caulked during assembly. Overflow boxes and other shipments must be limited to one per shipment. Other shipments are small HHG shipments that normally require a lesser size box than specified in Commercial Spec ASTM-D4169-01 or MTMC Pamphlet 55-12. Overflow containers are of a lesser size than specified in Commercial Spec ASTM-D4169-01 or MTMC Pamphlet 55-12 and oversized containers are always of a greater size than specified in Commercial Spec ASTM-D4169-01 or MTMC Pamphlet 55-12. One or more of these containers may be required per shipment. Price bid for Item 0003 includes container plus weight of its contents.

Area.....	Estimated Annual Quantity	Unit	Unit Price	Total
AA. Government-Furnished Containers: Overseas Pack Overflow Articles	_____	NCWT	_____	_____
AB. Government-Furnished Containers: Overseas Pack Oversize Articles	_____	NCWT	_____	_____
AC. Government-Furnished Containers: Overseas Pack Other Shipments	_____	NCWT	_____	_____
AD. Government-Furnished Containers: Domestic Pack: Overflow Articles	_____	NCWT	_____	_____
AE. Government-Furnished Containers: Domestic Pack: Oversize Articles	_____	NCWT	_____	_____
AF. Government-Furnished Containers: Domestic Pack: Other Shipments	_____	NCWT	_____	_____
AG. Contractor-Furnished Containers: Overseas Pack: Overflow Articles	_____	NCWT	_____	_____
AH. Contractor-Furnished Containers: Overseas Pack: Oversize Articles	_____	NCWT	_____	_____
AI. Contractor-Furnished Containers: Overseas Pack: Other Shipments	_____	NCWT	_____	_____
AK. Domestic Pack: Overflow Articles	_____	NCWT	_____	_____
AL. Domestic Pack: Oversize Articles	_____	NCWT	_____	_____
AM. Domestic Pack: Other Shipments	_____	NCWT	_____	_____

Item 0004. Complete Service-Outbound (Unaccompanied Baggage). Service includes packaging, inventorying, packing in Government approved containers, weighing, strapping, obliteration of old markings, marking, and loading shipments on the linehaul carrier's equipment. Service must be performed at member's/employee's residence. (Service may be performed at contractor's facility when ordered by the Ordering Officer.)

Area.....	Estimated Annual Quantity	Unit	Unit Price	Total
AA. Government-Furnished Containers: Drayage Included	_____	NCWT	_____	_____
AB. Government-Furnished Containers: Drayage Not Included	_____	NCWT	_____	_____
AC. Contractor-Furnished Containers: Drayage Included	_____	NCWT	_____	_____
AD. Contractor-Furnished Containers: Drayage Not Included	_____	NCWT	_____	_____

Item 0005. Complete Service-Outbound (Unaccompanied Baggage from Nontemporary Storage). Service must be the same as Item 0004 except that (a) unaccompanied baggage must be picked up at a nontemporary storage facility and transported to contractor's facility; or (b) unaccompanied baggage must be delivered to contractor's facility; and (c) servicing of appliances, preliminary packing and accessorial services must not be provided.

Area.....	Estimated Annual Quantity	Unit	Unit Price	Total
AA. Government-Furnished Containers: Drayage Included	_____	NCWT	_____	_____
AB. Government-Furnished Containers: Drayage Not Included	_____	NCWT	_____	_____
AC. Contractor-Furnished Containers: Drayage Included	_____	NCWT	_____	_____
AD. Contractor-Furnished Containers: Drayage Not Included	_____	NCWT	_____	_____

Item 0006. Outbound Service-Unaccompanied Baggage Packed by Member/Employee. Service must include weighing, strapping, banding, obliterating old markings, and marking. Service may include containerization in outer shipping containers as ordered by the contracting officer.

Area.....	Estimated Annual Quantity	Unit	Unit Price	Total
AA. Containerization Not Required: Drayage Included	_____	GCWT	_____	_____
AB. Containerization Not Required: Drayage Not Included	_____	GCWT	_____	_____
AC. Containerization Required: Drayage Included	_____	NCWT	_____	_____
AD. Containerization Required: Drayage Not Included	_____	NCWT	_____	_____

Item 0007. Outbound Service-Unaccompanied Baggage Packed By Member/Employee-Consolidated Shipments/Government Facility. Service must be the same as Item 0006 above except that service must include two or more shipments picked up from a Government office, warehouse, or facility.

Area.....	Estimated Annual Quantity	Unit	Unit Price	Total
AA. Containerization Not Required: Drayage Included	_____	GCWT	_____	_____
AB. Containerization Required: Drayage Included	_____	NCWT	_____	_____

Item 0008. Expensive and Valuable Items. Service must include inventorying each item, packing in Government-approved, contractor-furnished container(s), marking, banding, and cubing at member's/employee's residence. Drayage will be ordered by the contracting officer. If drayage is required, weighing must be done on properly certified scales and a certified weight ticket must be furnished. If drayage is not required, weighing must be done at member's/employee's residence on portable or bathroom scales. In jurisdictions where local law prohibits the certification of portable scales, a weight certificate will not be required. However, upon the written authority of the contracting officer, the contractor may apply a constructive weight of 11 pounds per gross cubic foot of the container.

Area.....	Estimated Annual Quantity	Unit	Unit Price	Total
AA. Drayage Included	_____	NCWT	_____	_____
AB. Drayage Not Included	_____	NCWT	_____	_____

Item 0009. Storage. Storage of containerized articles must be furnished when ordered by the contracting officer. Charges must not commence earlier than the sixth workday following date of transportation officer's receipt of notification of completion of containerization service. Storage charges apply for each 30-day period or fraction thereof. Date of release from storage must not be considered in computation of storage charges.

Area.....	Estimated Annual Quantity	Unit	Unit Price	Total
	_____	NCWT	_____	_____
	_____	NCWT	_____	_____

Item 0010. Containers. Service must consist of the furnishing of the following types of new containers or specially constructed wooden crates. Containers furnished or specially constructed are to be assembled and ready for loading. When a specific container from the MTMC Pamphlet 55-12 is ordered, the order will indicate the MTMC approval number.

Area.....	Estimated Annual Quantity	Unit	Unit Price	Total
AA. Container (ASTM-D4169-01)	_____	ea	_____	_____
AB. Container (MTMC Pamphlet 55-12)	_____	ea	_____	_____
AC. Crate (ASTM-D6039/D6039M-96)	_____	cu ft or fraction thereof	_____	_____

Item 0011. Remarking, Coopering and Assembly/Disassembly Service.

AA. Remarking of Shipments for Reconsignment. Service must consist of obliteration of all old markings, stenciling of necessary information on loaded shipping containers scheduled for reconsignment, and loading on the hauling carrier's vehicle.

Area.....	Estimated Annual Quantity	Unit	Unit Price	Total
	_____	ea	_____	_____

AB. Coopering. Service must consist of repair of containers not to exceed 30 percent of total area of shipping container or cost of repairs will not exceed 50 percent of the container replacement cost. Minor repair, such as replacement of bolts, nails and bands must be accomplished at no expense to the Government.

Area.....	Estimated Annual Quantity	Unit	Unit Price	Total
	_____	ea	_____	_____

AC. Assembly/Disassembly of Government-Owned Containers. Contractor will assemble Government-owned containers. Component parts will be furnished by the Government. Contractor will disassemble Government-owned containers. Component parts will be put into a cloth bag and attached to the container. Knocked down container sections will be banded.

Area.....	Estimated Annual Quantity	Unit	Unit Price	Total
AD. Assembly	_____	each	_____	_____
AE. Disassembly	_____	each	_____	_____

Item 0012. Drayage Beyond the Contract Area of Performance. Service must consist of drayage of packed shipments beyond the contract area of performance, not to exceed ____ miles. Mileage must be computed on the shortest highway distance commencing with the point of pickup to the outer boundary of the contract area of performance.

Area.....	Estimated Annual Quantity	Unit	Unit Price	Total
AA. Household goods loaded mile	_____	per	_____	_____
AB. Unaccompanied baggage	_____	per	_____	_____

Item 0013. Attempted Pickup. When the initial attempt to pickup a shipment at the member's/employee's residence is unsuccessful, charges apply provided the Contractor notified the contracting officer via telephone and provided that after contractor's notification, the contracting officer (a) cannot locate the member/employee within 30 minutes, (b) cannot have the member/employee at the residence within one hour after notification, and (c) the contractor left a notice of attempted pickup at the residence.

Area.....	Estimated Annual Quantity	Unit	Unit Price	Total
AA. Household goods	_____	_____	ea shpmt	_____
AB. Unaccompanied baggage	_____	_____	ea shpmt	_____

NOTE: All Above Items are included in the evaluation of bids

Item 0014. Additional Services. The contractor must provide additional services not included in the schedule, but required for satisfactory completion of the services ordered under this contract, at a rate comparable to the rate for like services as contained in tenders on file with the state regulatory bodies or MTMC, in effect at the time of the order.

RECAPITULATION SCHEDULE I

Schedule Total - Area ..... $.....

(Repeat for each area listed.)

SCHEDULE II

INBOUND SERVICES

Item 0015. Complete Service-Inbound (HHG). Service must include drayage from contractor's facility to storage warehouses, air and surface transportation terminals, military installation shipping offices and ocean or river terminals/piers and return, unloading from the delivering carrier's vehicle, handling into contractor's facility, drayage to member's/employee's residence, decontainerization and unpacking of loaded containers of HHG and placing goods in rooms as directed by member/employee, unservicing appliances, assembly of any disassembled articles and removing shipping containers, barrels, boxes/crates, and debris from member's/employee's residence and drayage of empty containers to contractor's or Government facility.

Area.....	Estimated Annual Quantity	Unit	Price	Unit Total
	_____	NCWT	_____	_____

Item 0016. Complete Service - Inbound (HHG). Service must be same as Item 0015 above except that drayage of shipment to residence is not required.

Area.....	Estimated Annual Quantity	Unit	Price	Unit Total
	_____	NCWT	_____	_____

Item 0017. Complete Service Inbound (HHG). Service must be the same as Item 0015 above except removal of items from outer container will be at the contractor's facility and articles will be drayed to member's/employee's residence.

Area.....	Estimated Annual Quantity	Unit	Price	Unit Total
	_____	NCWT	_____	_____

Item 0018. Inbound Service-Contractor Facility (HHG). Services must include drayage from storage warehouses, air and surface transportation terminals, military installation shipping offices, and ocean or river terminals/piers to contractor's facility, unloading from the delivering carrier's vehicle into the contractor's facility and delivery of articles to property member/employee, motor van carrier, or NTS contractor at the contractor's facility.

Area.....	Estimated Annual Quantity	Unit	Price	Unit Total
	_____	NCWT	_____	_____

Item 0019. Complete Service-Expensive and Valuable Items. Services must include drayage from the storage warehouses, air and surface transportation terminals, military installation shipping offices, and ocean or river terminals/piers to contractor's facility, unloading from the delivering carrier's vehicle, handling into contractor's facility, decontainerization and unpacking of containers at member's/employee's residence, and removal of shipping containers and debris from the residence.

Area.....	Estimated Annual Quantity	Unit	Price	Unit Total
AA. Drayage Included	_____	NCWT	_____	_____
AB. Drayage Not Included	_____	NCWT	_____	_____

Item 0020. Complete Service-Inbound (Unaccompanied Baggage). Service must include drayage from contractor's facility to storage warehouses, air and surface transportation terminals, military installation shipping offices and ocean or river terminals/piers and return, unloading from the delivering carrier's vehicle, handling into contractor's facility, drayage of unaccompanied baggage containers to member's/employee's residence, unpacking of containers, reassembly of articles and removal of all shipping containers and debris from the residence.

Area.....	Estimated Annual Quantity	Unit	Price	Unit Total
	_____	NCWT	_____	_____

Item 0021. Complete Service-Inbound (Unaccompanied Baggage). Service must be same as Item 0020 except that drayage to residence is not required.

Area.....	Estimated Annual Quantity	Unit	Price	Unit Total
	_____	NCWT	_____	_____

Item 0022. Inbound Service - Contractor Facility (Unaccompanied Baggage). Service must be the same as Item 0020 except service must also include removal of unaccompanied baggage from outer shipping containers for pickup by the member/employee or release to a motor carrier or other contractor at the contractor's facility.

Area.....	Estimated Annual Quantity	Unit	Price	Unit Total
	_____	NCWT	_____	_____

Item 0023. Storage. Storage of containerized articles must be furnished when ordered. Charges under this item must not commence earlier than the sixth workday following date of contractor's notification to the transportation officer of arrival of shipment. Storage charges apply for each 30-day period or fraction thereof. Date of release from storage must not be considered in computation of storage charges.

Area.....	Estimated Annual Quantity	Unit	Price	Unit Total
	_____	NCWT	_____	_____

Item 0024. Remarking, Coopering, and Assembly/Disassembly Service.

AA. Remarking of Shipments for Reconsignment. Services must include drayage from storage warehouses, air and surface transportation terminals, military installation shipping offices, and ocean or river terminals/piers to contractor's facility, unloading from the delivering carrier's vehicle, handling into contractor's facility, obliteration of all old markings, stenciling of necessary information on loaded shipping containers schedule for reconsignment loading on the hauling carrier's vehicle.

Area.....	Estimated Annual Quantity	Unit	Price	Unit Total
	_____	ea piece	_____	_____

AB. Coopering. Service must consist of repair of containers not to exceed 30 percent of total area of shipping container or costs of repairs will not exceed 50 percent of the container replacement cost. Minor repair, such as replacement of bolts, renailing and rebanding must be accomplished at no expense to the Government.

Area.....	Estimated Annual Quantity	Unit	Price	Unit Total
	_____	ea piece	_____	_____

AC. Assembly/Disassembly of Government-Owned Containers. Contractor will assemble Government-owned containers. The Government will furnish component parts. Contractor will disassemble Government-owned containers. Component parts will be put into a cloth bag and attached to the container. Knocked down container sections will be banded.

Area.....	Estimated Annual Quantity	Unit	Price	Unit Total
AD. Assembly	_____	each	_____	_____
AE. Disassembly	_____	each	_____	_____

Item 0025. Attempted Delivery. When the initial attempt to deliver a shipment at the member's/employee's residence is unsuccessful, charges apply provided the contractor notified the contracting officer via telephone and provided that after contractor's notification, the contracting officer (a) cannot locate the member/employee within 30 minutes, (b) cannot have the member/employee at the residence within one hour after notification, and (c) the contractor left a notice of attempted delivery at the residence.

Area.....	Estimated Annual Quantity	Unit	Price	Unit Total
AA. Household Goods	_____	ea shpmt	_____	_____
AB. Unaccompanied Baggage	_____	ea shpmt	_____	_____

Item 0026. Reweighing. Service must consist of weighing the loaded containers prior to delivery and weighing the empty containers after delivery.

Area.....	Estimated Annual Quantity	Unit	Price	Unit Total
AA. Household Goods	_____	ea shpmt	_____	_____
AB. Unaccompanied Baggage	_____	ea shpmt	_____	_____

Item 0027. Drayage Beyond the Contract Area of Performance. Service must consist of drayage of packed shipments beyond the contract area of performance, not to exceed ____ miles. Mileage must be computed on the shortest highway distance commencing with the point of pickup to the outer boundary of the contract area of performance

Area.....	Estimated Annual Quantity	Unit	Price	Unit Total
AA. Household Goods loaded mile	_____	per	_____	_____
AB. Unaccompanied baggage loaded mile	_____	per	_____	_____

Item 0028. Partial Withdrawal. Service must be the same as Items 0015, 0016, 0020, or 0021, except a partial removal of the items from the outer container will be performed at the contractor's facility. Articles not removed from the shipment will remain at the contractor's facility.

Area.....	Estimated Annual Quantity	Unit	Price	Unit Total
AA. Household Goods Drayage included	_____	NCWT	_____	_____
AB. Household Goods Drayage not included	_____	NCWT	_____	_____
AC. Unaccompanied Baggage Drayage included	_____	NCWT	_____	_____
AD. Unaccompanied Baggage Drayage not included	_____	NCWT	_____	_____

Item 0029-0030. Reserved (See additional services).

NOTE: All above Items are included in the evaluation of bids

RECAPITULATION SCHEDULE II

Schedule Total - Area ....…..... $.....

(Repeat for each area listed.)

SCHEDULE III

INTRA-CITY AND INTRA-AREA MOVES

Item 0031. Complete Service for Intra-City and Intra-Area Moves. Service must include a premove survey, servicing of appliances, packaging and packing at member's/employee's residence to protect HHG properly during transit, tagging of items, inventorying, loading, weighing, drayage, unloading, unpacking, and placing of each article in member's/employee's new residence as directed by member/employee or member's/employee's designated representative and removal of all empty containers and materials from residence.

Area.....	Estimated Annual Quantity	Unit	Unit Price	Unit Total
	_____	NCWT	_____	_____

Item 0032. Attempted Pickup or Delivery. When the initial attempt to pickup or deliver a shipment at the member's/employee's residence is unsuccessful, charges apply provided the contractor notified the contracting officer via telephone and provided that after contractor's notification, the contracting officer (a) cannot locate the member/employee within 30 minutes, (b) cannot have the member/employee at the residence within one hour after notification, and (c) the contractor left a notice of attempted pickup or delivery at the residence.

Area.....	Estimated Annual Quantity	Unit	Unit Price	Unit Total
AA. Attempted Pickup	_____	ea shpmt	_____	_____
AB. Attempted Delivery	_____	ea shpmt	_____	_____

Item 0033. Drayage Beyond the Contract Area of Performance. Service must consist of drayage of packed shipments beyond the contract area of performance, not to exceed ___ miles. Mileage must be computed on the shortest highway distance commencing with the point of departure from the outer boundary of the contract area of performance to the destination point.

Area.....	Estimated Annual Quantity	Unit	Unit Price	Unit Total
	_____	Per loaded mile	_____	_____

(Repeat for additional areas as needed.)

NOTE: All above Items are included in the evaluation of bids.

RECAPITULATION SCHEDULE III

Schedule Total-Area ..... $.....

(Repeat for each area listed.)

Attachment 4

Definitions

This part defines words and terms commonly used in this performance work statement.

Advance Shipping Notice. A system to accurately project cargo arrival by weight, cube, and channel at Air Mobility Command Aerial Ports of Embarkation regardless of operational tempo, in time to impact aircraft scheduling.

Bluebark. The code word used to designate a personal property shipment of a deceased member/employee.

Call Number or Lot Number. Locally assigned control number provided by the ordering activity when a requirement for services is placed with the contractor. For inbound shipments, the number is normally assigned when the Personal Property Shipping Officer receives the freight bill or written receiving notice from the contractor. For outbound or local drayage shipments, the number is normally assigned at the time the order is placed with the contractor.

Complete Service. The rate bid per each item includes all related services, such as long carry, stairs, elevators, excessive distances, etc., necessary to perform the complete pickup and delivery of the personal property shipment.

Containerization. The stuffing or loading of personal property into exterior shipping containers.

Contracting Officer. Any person who, either by virtue of position or by appointment in accordance with the Federal Acquisition Regulation or supplements thereto, is currently a contracting officer with the authority to enter into and administer contracts and make determinations and findings with respect thereto or with any part of such authority. The term also includes the authorized representative of the contracting officer acting within the limits of his or her authority as delegated by the contracting officer.

Direct Procurement Method. A method of shipment in which the Government manages the shipment throughout. Packing, containerization, local drayage, delivery, unpacking, storage, and related services are obtained from commercial firms under a contractual arrangement or by the use of Government facilities and employees.

Drayage. Schedule I - Drayage included applies in those instances when a shipment requires drayage to an air, water, or other terminal for onward movement after completion of the shipment preparation by the contractor. If it is being moved from a residence or other pickup point to the contractor's warehouse for onward movement by another freight company, carrier, etc., drayage not included applies. Schedule II - Drayage included means delivery of the shipment from destination contractor's facility or other destination point to the final delivery point as ordered. When shipment or partial removal of items from shipment is performed and prepared for member's/employee's pickup at destination delivery point, drayage not included applies.

Employee. The civilian employee or agent thereof for whom services is being provided at Government expense.

GCWT. Code to designate gross hundredweight.

Government-Owned Containers (GOCs). GOCs include all exterior wooden shipping containers purchased by the Government or constructed by the contractor for services under this contract. GOCs include containers meeting the requirements of Commercial Standard ASTM-D4169-01, Federal Specification PPP-B-601H, and Military Transportation Management Command Pamphlet 55-12. GOCs include all wooden exterior shipping containers purchased by the Government and received by the contractor awarded those services identified in Schedule II, Inbound Services.

Household Goods. (See the Joint Federal Travel Regulations and the Joint Travel Regulations, Appendices A for complete definitions.) Household furnishings, appliances, clothing, books, liquor, and similar items belonging to a member/employee and immediate family. Snowmobiles and vehicles such as motorcycles, mopeds, golf carts, and boats (employees are not authorized to ship boats) are authorized to be shipped. Any substances, which are hazardous such as flammables and combustibles, may not be shipped. In addition, the following items may not be shipped or stored as HHG at Government expense:

> Automobiles, trucks, vans, and similar motor vehicles; airplanes; mobile homes; camper trailer; farm equipment.
> Cordwood and building materials.
> Live animals including birds, fish, and reptiles.
> Privately-owned live ammunition.
> Property for resale, disposal or commercial use rather than for use by the member/employee and his or her dependents.

International. The movement of household goods or unaccompanied baggage between a point in the Continental United States and a point in an overseas area.

Intertheater. The movement of household goods or unaccompanied baggage between one overseas theater and another overseas theater.

Intratheater. The movement of household goods or unaccompanied baggage within one overseas theater.

Issuing Officer. Only authorized or acting Personal Property Shipping Offices may issue Personal Property Government Bills of Lading (PPGBL). Such authorized persons may be military personnel or civilian employees of the Government on duty at the issuing office. As stated in 41 CFR 101-41.302-4, accountability for PPGBLs used by a contractor-shipper remains with the issuing office. Thus, the name and title of the issuing officer and the name and address of the issuing office, rather than those of the contractor-shipper must appear on the PPGBL.

Item or Article. The terms item and article used in this Regulation must be interchangeable. Each shipping piece or package and the contents thereof must constitute one item.

Lot Number. See Call Number.

Member. The military member or agent thereof for who services is being provided at Government expense.

Member/Employee. Member or Employee.

Metrics. A statistical measurement of performance.

NCWT. Code used to designate net hundredweight.

Ordering Officer. The contracting officer of a using activity or a Government individual appointed by the contracting officer authorized to order services under the contract.

Outsize Air Cargo. Cargo or containers in a shipment, including consolidated shipments, that have any exterior measurement greater than 72 inches in any dimension (length, width, or height).

Packaging. The processes and procedures used to protect materiel from deterioration, damage, or both. It includes cleaning, drying, preserving, packing, marking, and unitization.

Packed by Member/Employee (PBO). Those articles packed in a container by the member/employee (Item 0006 and 0007, Schedule I).

Packing. Assembly of packaged items into a shipping container with necessary blocking, bracing, cushioning, weatherproofing, reinforcement, and marking.

Personal Property. Household goods, unaccompanied baggage, privately-owned vehicles and mobile homes, as defined in the Joint Federal Travel Regulations and the Joint Travel Regulations.

Personal Property Shipping Officer (PPSO). The individual designated by authority to perform assigned traffic management functions at military installations or activities, regardless of whether or not that is the organizational title of the individual. For the purpose of this contract, the term PPSO includes representatives designated to order the services required and to inspect and evaluate those services performed by the contractor for acceptance or rejection.

Professional Books, Papers, and Equipment (PBP&E). (Also called PRO or PRO-Gear.) Articles of household goods in a member's/employee's possession needed for the performance of official duties at the next or a later destination. Examples include: (1) reference material; (2) instruments, tools, and equipment peculiar to technicians, mechanics, and members/employees of the professions; (3) specialized clothing such as diving suits, astronauts' suits, flying suits and helmets, band uniforms, chaplains' vestments, and other specialized apparel not normal or usual uniform or clothing; (4) communication equipment used by members/employees s in association with the Military Affiliated Radio Station (5) individually owned or specially issued field clothing and equipment; (6) an official award given to a members/employees by a Service (or a component thereof) for service performed by the members/employees in the member's/employee's capacity or by a professional society/organization/United States or foreign

Government for significant contributions in connection with official duties; and (7) personal computers and accompanying equipment used for official Government business (i.e., central processing unit, monitor, keyboard, mouse, one printer, one set of small computer speakers). NOTE: Excluded from PBP&E are sports equipment, and office, household, or shop fixtures or furniture (such as bookcases, study/computer desks, file cabinets, and racks) of any kind even though used in connection with the PBP&E.

Pro Number. The abbreviation of the word progressive and is usually prefixed to an agent's record numbers on freight bills, etc.

Quality Assurance Evaluator (QAE). Representative of the Personal Property Shipping Officer who has been appointed as a QAE to be responsible for providing technical assistance to the contracting officer in administration of the contract. The QAE must be responsible for inspection and acceptance of materials and services rendered by the contractor.

Required Port Delivery Date (RPDD). The RPDD is a specified calendar date the carrier/contractor agrees to deliver Code J and/or Direct Procurement Method unaccompanied baggage shipments to the Aerial Port of Embarkation as specified on the Government Bill of Lading and required by the tender of service/rate solicitation or contract. If the RPDD falls on a Saturday, Sunday, foreign national, US National, or state holiday, the RPDD will be the following workday.

Residence. Normally considered to be the home, barracks, or other dwelling of the Service/Agency member/employee.

Unaccompanied Baggage. (See JFTR and JTR, Appendices A for complete definitions.) That portion of the member's/employee's authorized weight allowance of personal property that is not transported free on a ticket used for personal travel and which is shipped separately from the bulk of the household goods. This shipment may be shipped by the expedited transportation mode. Examples are: personal clothing; professional books and equipment needed on arrival for performance of official duties; pots, pans, linens, and other light housekeeping items; collapsible cribs, playpens and baby carriages; small radios, portable televisions and small tape recorders; special equipment required for patients; and other items required for the health, comfort, and morale of the member/employee. (Refer to individual Service/Agency Regulations for specific definition of unaccompanied baggage.)

Attachment 5
Acronyms

Acronym	Meaning
AMC	Air Mobility Command
CD	Contractor Disassembled
CDRL	Contract Document Requirement Listing
CLIN	Contract Line Item Number
CONUS	Continental United States
CP	Carrier Packed
CU	Cube
CW	Containerized Warehouse
CWT	Hundredweight
DBO	Disassembled by Owner
DD Form	Department of Defense Form
DPM	Direct Procurement Method
DTR	Defense Transportation Regulation
FAR	Federal Acquisition Regulation
GBL	Government Bill of Lading
BLOC	Bill of Lading Office Code
GCWT	Gross Hundredweight
GOC	Government-Owned Container
HHG	Household Goods
ITGBL	International Through Government Bill of Lading
JFTR	Joint Federal Travel Regulations
JTR	Joint Travel Regulations
MSC	Military Sealift Command
MTMC	Military Traffic Management Command
NCWT	Net Hundredweight
NTS	Nontemporary Storage
OCONUS	Outside Continental United States
PBO	Packed By Owner
PBP&E	Professional Books, Papers and Equipment
POD	Port of Debarkation
POE	Port of Embarkation
PPGBL	Personal Property Government Bill of Lading
PPSO	Personal Property Shipping Office
PRO	Pro-Gear (Professional Books, Papers and Equipment)
QAE	Quality Assurance Evaluator
RDD	Required Delivery Date
RPDD	Required Port Delivery Date
SDS	Service Delivery Summary
SF	Standard Form
SOW	Statement of Work
TCMD	Transportation Control Movement Document
TCN	Transportation Control Number
TGBL	Though Government Bill of Lading
TP No.	Transportation Priority Number
UB	Unaccompanied Baggage

THIS PAGE INTENTIONALLY LEFT BLANK

APPENDIX H

ALPHA CODES FOR DIRECT PROCUREMENT METHOD (DPM) SHIPMENTS

A. General. This Appendix provides guidance for the construction of two-position alpha codes for DPM shipments. DPM alpha codes must be entered in the "Service Code," Block 3 of the Personal Property Government Bill of Lading on all DPM shipments. The first position must designate the commodity shipped (Paragraph B, below), and the second position must designate the type of DPM service used (Paragraph C below). For example, in constructing a DPM alpha code for an intertheater shipment of unaccompanied baggage through commercial air, the code for unaccompanied baggage (B) will be found in Paragraph B, and the code for (INTE/AIR/COMM/DPM) (L) will be found in Paragraph C.3. Therefore, "BL" is the correct DPM alpha code for this shipment.

B. DPM Alpha Codes-First Position, Type Commodity Designator.

Commodity	Code
Ammunition	A
Unaccompanied baggage (personal effects)	B
Household goods	H
Expensive and valuable items	V

C. DPM Alpha Codes-Second Position, Type Commodity Designator.

1. Domestic (DOM)--DPM Movements Solely Within the Continental United States (CONUS).

Service	Code
(DOM/SUR/MTR/DPM)--DPM movement in which the Government arranges packing or pickup at origin, linehaul movement by motor carrier, and delivery or unpacking at destination.	A
(DOM/AIR/COMM/DPM)--DPM movement in which the Government arranges packing or pickup at origin, movement to a commercial air terminal, air transportation to the destination commercial air terminal, and delivery or unpacking at destination	B
(DOM/AIR/MIL/DPM)--DPM movement in which the Government arranges packing or pickup at origin, movement to a military air terminal, movement by military air to the destination military air terminal, and delivery or unpacking at destination.	C
(DOM/PP)--DOM DPM movement not otherwise identified above.	D

2. International (INTL)--DPM Movements Between the CONUS and Overseas Areas.

Service	Code
(INTL/SUR/MSC/DPM)--DPM movement in which the Government arranges packing or pickup at origin, movement to a military ocean terminal, Military Sealift Command (MSC)-controlled ocean lift to the destination military ocean terminal, and delivery or unpacking at destination.	E
(INTL/AIR/COMM/DPM)--DPM movement in which the Government arranges packing or pickup at origin, movement to a commercial air terminal, air transportation to the destination air terminal, and delivery or unpacking at destination.	F
(INTL/AIR/AMC/DPM)--DPM movement in which the Government arranges packing or pickup at origin, movement to a military air terminal, Air Mobility Command (AMC)-controlled airlift to the destination military air terminal, and delivery or unpacking at destination.	G
(INTL/PP)--International DPM movement not otherwise identified above.	H

3. Intertheater (INTE)--DPM Movement Between One Overseas Theater and Another Overseas Theater.

Service	Code
(INTE/SUR/MSC/DPM)--DPM movement in which the Government arranges packing or pickup at origin, movement to a military ocean terminal, MSC-controlled ocean lift to the destination military ocean terminal, and delivery or unpacking at destination.	K
(INTE/AIR/COMM/DPM)--DPM movement in which the Government arranges packing or pickup at origin, movement to a commercial air terminal, air transportation to the destination air terminal, and delivery or unpacking at destination.	L
(INTE/AIR/AMC/DPM)--DPM movement in which the Government arranges packing or pickup at origin, movement to a military air terminal, AMC-controlled airlift to the destination military air terminal, and delivery or unpacking at destination.	M
(INTE/PP)--Intertheater DPM movement not otherwise identified above.	N

4. Intratheater (INTR)--DPM Movements Solely Within One Overseas Theater.

Service	Code
(INTR/SUR/MSC/DPM)--DPM movement in which the Government arranges packing or pickup at origin, movement to a military ocean terminal, MSC-controlled ocean lift to the destination military ocean terminal, and delivery or unpacking at destination.	P
(INTR/SUR/MTR/DPM)--DPM movement in which the Government arranges packing or pickup at origin, linehaul movement by motor carrier, and delivery or unpacking at destination	R
(INTR/AIR/COMM/DPM)--DPM movement in which the Government arranges packing or pickup at origin, movement to a commercial air terminal, air transportation to the destination air terminal, and delivery or unpacking at destination.	W
(INTR/AIR/AMC/DPM)--DPM movement in which the Government arranges packing or pickup at origin, movement to a military or air terminal, AMC-controlled airlift to the destination military air terminal, and delivery or unpacking at destination.	X
(INTR/PP)--Intratheater DPM movement not otherwise identified above.	Y

THIS PAGE INTENTIONALLY LEFT BLANK

APPENDIX I

EXAMPLES OF HAZARDOUS MATERIALS

A. Combustible Liquids:

Alcoholic beverages (any single container exceeding one gallon capacity)
Alcohols
Antifreeze compounds
Camphor oil
Fluid cleaners (containing combustible materials, e.g., spot clothing cleaners and office machine cleaners).

B. Corrosive Liquids:

Acids--muriatic, nitric, photographic, sulfuric
Battery with acid
Disinfectants
Dyes
Flame retardant compounds
Iron/steel rust preventing/rust removing compounds
Paint and paint related materials.

C. Explosives:

Ammunition
Black powder
Blasting caps
Dynamite, plastics or any similar explosives
Explosive auto alarms
Fireworks
Fuse lighters
Igniters
Primers
Propellants
Signal flares
Smokeless powder
Souvenir explosive instruments of war
Spear guns having charged heads
Toy propellants or smoke devices.

D. Flammables:

Acetone
Adhesives (glues, cements and plastics)
Ammonia
Charcoal briquettes
Cleaning fluids
Compound 3 weed killers

Denatured alcohol
Enamel
Gasoline
Insecticides
Kerosene
Lacquer
Leather dressing or bleach
Lighter fluids (pocket, charcoal, camp stove, lamp or torch)
Liquors (any single container exceeding one gallon capacity)
Matches
Oil stains for wood
Paint
Paint or varnish remover
Petroleum products
Polishes, liquid (metal, stove, furniture and wood)
Propane (purged or unpurged) or other gas used for cooking or heating purposes
Shellac
Shoe polish (liquid)
Solvents, plastic
Stains
Turpentine
Varnish
Wood filler.

NOTE: Completely drain all fuel from engine power driven equipment. Drain equipment (motorcycle, moped, lawn mowers, boats, snowmobiles, etc.). Run until engine stalls. Drain all oil and water. Allow the fuel tank and lines to remain open for 24 hours prior to pickup. Disconnect nonspillable gel-type batteries and tape the ends to prevent short circuit. Only nonspillable gel-type batteries are authorized. The batteries may remain in the equipment holder, but ensure they remain upright when packed in the shipping container. Batteries with acid or alkali are prohibited from shipment.

E. Gases, Compressed: Engine starting fluids, fire extinguishers, gases used in welding, scuba diving tanks (see note below).

F. Aerosol Can (containing a Flammable Gas, Flammable Liquid, Toxic, or Corrosive Substance).

G. Chlorinated Hydrocarbons in Decorative Lamps.

H. Other Regulated Material Termed Combustible, Corrosive, or Flammable.

NOTE: Only those scuba diving tanks containing not more than 25 pounds per square inch at 70 degrees Fahrenheit may be shipped as household goods or unaccompanied baggage. Servicing for shipment will include:

1. Written certification of purging serviced by dive shop or licensed individual qualified to perform purging. A tag or label must be affixed to the tank certifying service was performed.

2. Completely empty tank, remove the valve, and replace valve with plug designed for this purpose.

THIS PAGE INTENTIONALLY LEFT BLANK

APPENDIX J

BASIC ORDERING AGREEMENT FOR STORAGE OF PERSONAL PROPERTY AND RELATED SERVICES

DEPARTMENT OF DEFENSE

DEPARTMENT OF THE ARMY

MILITARY TRAFFIC MANAGEMENT COMMAND

BASIC ORDERING AGREEMENT NUMBER

BASIC ORDERING AGREEMENT

FOR

STORAGE OF PERSONAL PROPERTY AND RELATED SERVICES

ISSUING OFFICE:

REGIONAL STORAGE MANAGEMENT OFFICE (RSMO)

MILITARY TRAFFIC MANAGEMENT COMMAND

RSMO ADDRESS

CONTRACTOR:

(NAME)	**(SCAC)**

LOCATION ADDRESS

( )

(CITY)	**(STATE)**	**(COUNTY)**	**(ZIP)**

MAILING ADDRESS-H/O

( )

(CITY)	**(STATE)**	**(HO/COUNTY)**	**ZIP**

TABLE OF CONTENTS

PART I			PAGE
SECTION A		SIGNATURE PAGES	J-5
SECTION B		SCHEDULE OF SERVICES AND RATES FOR HOUSEHOLD GOODS	J-9
SECTION C		TECHNICAL PROVISIONS	J-11
PARAGRAPH	1	Scope	J-11
	2	General Requirements	J-12
	3	Special Requirements	J-15
	4	Handling and Operating Requirements	J-17
	5	Inventory	J-22
	6	Storage Requirements	J-24
	7	Contractor's Duties - Location of Storage Facilities	J-28
SECTION D		RESERVED	J-31
SECTION E		INSPECTION OF TRANSPORTATION	J-32
SECTION F		PERFORMANCE PERIOD	J-32
SECTION G		CONTRACT ADMINISTRATION DATA	J-32
PARAGRAPH	1	Payment Address	J-32
	2	Invoices	J-32
SECTION H		SPECIAL CONTRACT REQUIREMENTS	J-33
PARAGRAPH	1	Rate Submission	J-33
	2	Using Activities - Ordering Officers	J-33
	3	Service Orders	J-34
	4	Charges	J-35
	5	Compensation	J-36
	6	Liability for Care of Property	J-37
	7	Annual Documentation Requirement	J-38
	8	Possession of this Agreement	J-38
	9	Subcontracting	J-38
	10	Reporting Procedures for Loss and Damage	J-38
	11	Ordering Officer's Contract Reporting Responsibilities	J-39
	12	Standard Industrial Classification (SIC) Code And Small Business Size Standard (FAR 52.219-22)	J-40
	13	Notice - Facsimile Documents	J-40

PART II

SECTION I CONTRACT CLAUSES J-41
PARAGRAPH
1 Wage Rate Determination J-41
2 52.243-1 Changes-Fixed Price, Alternate I (April 1984) J-41
3 52.215-33 Order of Preference-Uniform Contract Format (October 1997) J-42
4 52.252-2 Clauses Incorporated by Reference (February 1998) J-42

PART III

SECTION J LIST OF DOCUMENTS, EXHIBITS, AND OTHER ATTACHMENTS J-44

PART IV

SECTION K REPRESENTATIONS, CERTIFICATIONS, AND OTHER STATEMENTS OF OFFEROR J-45
PARAGRAPH
1 52.203-2 Certificate of Independent Price Determination (April 1985) J-45
2 52.203-4 Contingent Fee Representation and Agreement (April 1984) (Reserved) J-46
3 52.204-3 Taxpayer Identification (October 1998) J-46
4 52.209-5 Certification Regarding Debarment, Suspension, Proposed Debarment, and other Responsibility Matters (January 2001) J-47
5 52.215-6 Type of Business Organization (July 1987) (Deleted) J-49
6 52.215-11 Authorized Negotiators (April 1984) (Deleted) J-49
7 52.219-1 Small Business Program Representations (October 2000) J-49
8 52.219-2 Small Disadvantaged Business Concern Representation (April 1984) (Deleted) J-52
9 52.219-3 Women-Owned Small Business Representation (April 1984) (Deleted) J-52
10 52.222-21 Prohibition of Segregated Facilities (February 1999) J-52
11 52.222-22 Previous Contracts and Compliance Reports (February 1999) J-52
12 52.222-25 Affirmative Action Compliance (April 1984) J-53
13 52.222-26 Equal Opportunity (February 1999) J-53
14 52.223-1 Clean Air and Water Certification (April 1984) (Deleted) J-55
15 52,223-5 Certification Regarding a Drug-Free Workplace (July 1990) (Deleted) J-55
16 52.232-11 Extras (April 1984) J-55

SECTION A – SIGNATURE PAGES

BASIC ORDERING AGREEMENT BETWEEN THE

UNITED STATES OF AMERICA AND_____

This Basic Ordering Agreement is entered into as of_____

by and between the UNITED STATES OF AMERICA, hereinafter called the

Government, represented by the Contracting Officer executing this Basic Ordering

Agreement, and_____,

(i) ( ) sole owner

(ii) ( ) a partnership, or

(iii) ( ) a corporation organized and existing under the laws of the State of _____hereinafter called the "Contractor."

This Agreement applies to services that the Government may require for the storage of personal property and related services. Should the Government order such services, the Government will require the Contractor to furnish all necessary labor, material, drayage, vans, equipment, storage facilities, and performance of related services, as may be specified in the Service Order for Personal Property (DD Form 1164).

The clauses and provisions hereinafter set forth have been agreed upon by the parties hereto for use in negotiated firm fixed price service orders between the parties entered into on or after the date of this Agreement, and prior to its termination. It is further agreed that the clauses and provisions set forth are mandatory clauses and shall, by reference or attachment, be incorporated in each service order issued pursuant to this Agreement.

This Agreement, including clauses and provisions hereof, may be amended only by mutual agreement of the parties, and the Agreement may be terminated in its entirety by either party upon thirty days written notice to the other party, except that this Agreement may be terminated by the Government at any time if the parties fail to agree upon an deletion, amendment, or addition to this Agreement which is required by statute, Executive Order, Federal Acquisition Regulation, or supplements thereto. No deletion, modification, addition to, or termination of, this Agreement shall affect any contracts theretofore entered into between the parties in which this Agreement or a portion thereof has been incorporated by reference.

This Agreement may be referred to by the Contractor in bids submitted in response to invitations for bids but cannot become a part of any contract placed through the process of formal advertising.

BASIC ORDERING AGREEMENT FOR STORAGE OF PERSONAL PROPERTY AND

RELATED SERVICES SIGNATURE PAGE

IN WITNESS THEREOF, THE PARTIES HERETO HAVE EXECUTED THIS BASIC ORDERING AGREEMENT AS OF THE DAY AND DATE FIRST ABOVE WRITTEN:

THE UNITED STATES OF AMERICA

WITNESS

BY _____

(SIGNATURE OF CONTRACTING OFFICER)

_____

(TYPED NAME)

_____ _____

(TYPED NAME OF CONTRACTOR)

BY

_____ _____

(SIGNATURE)

NOTE: In cases of corporations, witnesses not required but certificate below must be completed.

Type or print names under all signatures.

_____

(TYPED NAME)

_____

(TITLE)

_____

(ADDRESS)

AN OFFER SIGNED BY AN OFFICER OF THE CORPORATION MUST BE EXECUTED IN THE CORPORATION NAME AND BE ACCOMPANIED BY THE FOLLOWING CERTIFICATE EXECUTED AND SIGNED BY ANOTHER OFFICER OF THE CORPORATION UNDER ITS CORPORATE SEAL.

CERTIFICATE

I _____, CERTIFY THAT I AM THE_____

OF THE CORPORATION NAMED AS OFFEROR HEREIN; THAT _____, WHO SIGNED THIS OFFER ON BEHALF OF THE OFFEROR, WAS THEN _____ OF SAID CORPORATION; THAT SAID OFFER WAS DULY SIGNED FOR AND IN BEHALF OF SAID CORPORATION BY AUTHORITY OF ITS GOVERNING BODY, AND IS WITHIN THE SCOPE OF ITS CORPORATE POWERS.

(CORPORATE SEAL)

_____

(SIGNATURE)

IF A PARTNERSHIP

AN OFFER SIGNED BY A PARTNER MUST BE EXECUTED IN THE PARTNERSHIP NAME AND BE ACCOMPANIED BY A LISTING OF ALL OTHER PARTNERS. LIST NAMES BELOW IF NOT FURNISHED ELSEWHERE ON THE FORM.

_____ _____

_____ _____

_____ _____

DD FORM 1162-3 1 MAR 79

SECTION B

SCHEDULE OF SERVICES AND RATES FOR HOUSEHOLD GOODS

Rates listed in this schedule shall be inclusive of all charges for labor, materials, vans and equipment and incidental facilities and services necessary for the performing of the storage and related services specified in this schedule. All services to be performed under this schedule should be in accordance with requirements for services for storage of household goods. All service orders are subject to a minimum weight of 500 pounds.

1. BASIC ORDERING AGREEMENT NUMBER	2. MODIFICATION NUMBER	3. EFFECTIVE DATE *(YYYYMMDD)*

4. SERVICE PERFORMED

a. TITLE	b. DESCRIPTION		c. RATE
(1) ITEM I PACKING	Packing and protection as required by and incident to drayage, marking, tagging and inventorying for storage. (Includes flat wardrobe cartons) *(Rate per cwt.)*		$
(2) ITEM II SPECIAL SERVICE	(a) Wardrobes: Upright wardrobes with minimum 18 inch bar. *(Cost each)*		$
	(b) Inventory of high value items as declared by the member or his agent. *(Cost per inventoried carton)*		$
(3) ITEM III DRAYAGE	Pickup at location, loading, weighing, drayage to warehouse and unloading onto warehouse platform. *(Rate per cwt.)*	ZONE	
		1	$
		2	$
		3	$
		4	$
		5	$
		6	$
(4) ITEM IV HANDLING IN	Handling in, labor and equipment required to place in storage from warehouse platform, wrapping for storate which is in addition to that required for drayage to contractor's warehouse and preservation of items for and during the storage period. *(Rate per cwt.)*		$
(5) ITEM V STORAGE	Storage per Clause H-5, Basic Ordering Agreement *(Rate per cwt. per month)*		$
(6) ITEM VI HANDLING OUT	Handling out, labor and equipment required to remove from storage and place onto warehouse platform. *(Rate per cwt.)*		$
(7) ITEM VII DELIVERY	Delivery, to include loading at contractor's warehouse platform and drayage to destination, unloading, including the placing in appropriate rooms in accordance with specifications *(Rate per cwt.)*	ZONE	
		1	$
		2	$
		3	$
		4	$
		5	$
		6	$
(8) ITEM VIII UNPACKING	Unpacking, including unpacking all barrels, crates, cartons, recording overage, shortage or damage found while unpacking, removing from owner's residence all empty containers, packing materials and other debris accumulated incident to unpacking in accordance with specifications. *(Rate per cwt.)*		$

5. SERVICE AREA. This agreement covers orders placed by using activities within the following area.

6. GEOGRAPHIC DESCRIPTION OF EACH ZONE SHOWN IN ITEMS III AND VII ABOVE

a. ZONE 1	b. ZONE 2
c. ZONE 3	d. ZONE 4
e. ZONE 5	f. ZONE 6

7. CONTRACTOR CERTIFICATION STATEMENT

I certify that I hold a valid operating permit/certificate for the zones on which I have submitted rates.

a. TYPED NAME *(Last, First, Middle Initial)*	b. SIGNATURE

DD FORM 1162-1, SEP 1998 (EG) PREVIOUS EDITION IS OBSOLETE. Designed using Perform Pro, WHS/DIOR, Sep 98

PART I - SECTION C - TECHNICAL PROVISIONS

C-1 SCOPE

a. The purpose of this Agreement is to establish the terms and conditions under which the Contractor will provide necessary supervised labor, materials, and equipment for storage of personal property and related services under orders issued from time to time by the ordering officer. This Agreement does not obligate the Government to issue any orders for any services.

b. The Contractor shall furnish all necessary supervised labor, materials, drayage, vehicle equipment and warehouse space for the storage of personal property and the performance of related services as specified in the Service Order for Personal Property (DD Form 1164), (Attachment 2), issued by an authorized ordering officer at the using activities.

c. The rights and obligations of the parties to the Agreement shall be subject to and governed by the provisions of the Agreement and the order(s) issued hereunder. To the extent of any inconsistency between the Agreement and any order, the provisions of the Agreement shall prevail.

d. The Agreement shall be reviewed annually, as a minimum, and revised to conform with all requirements of statutes, Executive Orders, the Federal Acquisition Regulation (FAR) or the Defense FAR Supplement (DFARS). This revision shall be evidenced by an Agreement modifying the Agreement or by the issuance of a superseding Agreement.

e. The following terms used throughout this Agreement have the meaning as set forth below:

(1) "Ordering Officer" means an individual of a using activity authorized to issue Service Orders for Personal Property (DD Form 1164), (Attachment 2), under this Agreement. The individual may be the Contracting Officer of a using activity or a duly appointed ordering officer so authorized.

(2) "Using activity" means an installation, base or command of a military department or a Government agency which has been properly authorized by the Contracting Officer to issue service orders under this Agreement.

(3) "Personal property" or "household goods" includes furniture, appliances, clothing, baggage, all other personal effects of a similar character, professional books, paper, and equipment, and other items authorized by entitlement.

(4) "Lot" means personal property placed in storage at Government expense and covered by one service order.

(5) "Storage period" means the period of time the Contractor has possession of the property pursuant to Government orders.

(6) "Owner" or "member/employee" means the individual in whose name the property is stored under this Agreement.

(7) “Program” means the Department of Defense Personal Property Movement and Storage Program.

(8) “FAR” means the Federal Acquisition Regulation, formerly the Defense Acquisition Regulation.

(9) “DFARS” means the Defense Federal Acquisition Regulation Supplement.

(10) “Material change” means any change which, if authorized by one party, would vary its rights and duties to the party making the change or injuriously affect its legal relations with third parties.

C-2 GENERAL REQUIREMENTS

a. PREMOVE SURVEY.

(1) I agree to perform a premove survey on nontemporary storage lots estimated at 3,000 pounds or more, at origin points within a 50-mile radius of the warehouse facility designated for storage. I understand this requirement will apply to only those lots on which I am provided a minimum of five working days advance notice of the pickup date requirement.

(2) I agree that if a telephone number is provided five days in advance of pickup, I will make a telephone contact premove survey for nontemporary storage lots of lesser weights than indicated above, or for lots with origin points exceeding 50 miles of the warehouse facility designated for storage.

b. VEHICLE SPECIFICATIONS. Vehicles used in draying personal property under this Agreement shall be closed furniture vans. The interiors thereof shall be clean, dry, and free from vermin, acid, paint, grease, and all other substances injurious to the articles packed, and shall be provided with a sufficient quantity of clean pads, covers, and other protective equipment to ensure safe delivery of the personal property. The tailgate of vans shall not be used for hauling of personal property unless specifically authorized in advance by the ordering officer. When tailgate loading is authorized, the load shall not extend beyond the surface of the tailgate or above the top exterior surface of the vehicle and must be adequately protected against damage. Pallet-van packing may be used in lieu of closed vans provided protection is afforded against inclement weather and pilferage. Containers moving by flatbed equipment in local pickup or delivery service will be covered with a waterproof tarpaulin or other material providing equal protection, when local weather conditions dictate. This waterproof tarpaulin will cover the cargo on the top and sides down to the vehicle bed and all surfaces of the overhang. In any event, such protective covering will be available in local pickup or delivery services. Equipment shall be in safe mechanical condition.

c. CONTAINERS AND MATERIALS. All containers and materials used shall be in new or sound condition, adequate for the use employed, and must be dry, clean, and free from vermin, acid, paint, grease, and all other substances injurious to the articles packed. If material is not new, all marks pertaining to any previous usage shall be completely obliterated prior to reuse. New material must be used for packing mattresses, box springs, linens, bedding and clothing. Egg crates, orange crates, and similar types of containers shall not be used.

(1) BOXES. Wood or fiberboard boxes used as specified hereinafter shall be as follows: Wood-cleated fiberwood, wood-cleated plywood, nailed wood, wood-cleated veneer, paper overlaid, wire bound corrugated fiber, or solid fiber boxes. Boxes may be made of lumber, plywood or solid fiber and shall be well-manufactured and free from imperfections that shall affect their utility. Size and spacing of nails shall be in accordance with the best commercial practice. All unclinched nails shall be either cement coated or chemically etched.

(2) CARTONS. Cartons of solid or corrugated fiberboard may be used for packing linens, books, bedding, mattresses, lampshades, draperies, or similar articles. All cartons shall be adequate for the use employed. After packing, cartons must be closed and either glued, stapled (provided specialized stapling machines are used), or sealed by taping lengthwise at the joint on top and bottom. The sidewalls and ends of corrugated or solid fiber cartons shall have a minimum average bursting strength of 200 pounds per square inch. Cartons should be stacked in an upright position so as to minimize crushing. With the exception of mattress cartons, the inside dimensions of the carton--length, width, and depth totaled--shall not exceed 75 inches with a maximum weight limitation of 65 pounds. When determined by the ordering officer as necessary to assure protection, safe movement, and storage of articles, boxes, as indicated in (1) above, may be used in lieu of cartons. Cartons lacking a manufacturer's certification are not authorized for use.

(3) FIBER DRUMS, DISH PACKS, AND CARTONS. Fiber drums, dish packs, or cartons with a capacity of not less than five cubic feet are to be used for packing glassware, chinaware, bric-a-brac, table lamp bases, and other fragile articles. When packing of fragile items has been completed and space is left in a dish pack, such space may be used for packing other light items. Corrugated containers may be used in lieu of drum-type containers. The sidewalls and ends of the containers will be of a minimum bursting strength of 350 pounds per square inch. Not more than 120 pounds of material will be packed therein. The sum of the interior horizontal and vertical girths will be not less than 157 inches for fiber drums, or other drum-type containers. The cube of corrugated containers will be determined by actual measurements. All fiber drums, or dish packs will be securely sealed and marked "THIS END UP".

(4) FILLER AND PADDING. Good quality cellulose wadding, fiberboard, corrugated fiberboard, styrofoam, or kraft-type paper shall be used as a filler or for padding for general packing. Material shall be clean, dry, and free from vermin, or any substance injurious to the articles being packed.

(5) WRAPPING PAPER. All wrapping paper used shall be new or clean, kraft-type of not less than 30-pound weight except as otherwise provided herein. Unicellular polypropylene foam may be used providing it is new, clean, and appropriate for the purpose intended. Each item of silverware, silver ornamentation, or brass/copper shall be completely wrapped in nontarnish tissue paper.

(6) PAPER - WAXED OR TREATED. All waxed paper used shall be new or clean manila wax or equivalent of not less than 30-pound weight. Treated paper shall be of "butcher" paper type, free from creases and folds.

(7) UNICELLULAR POLYPROPYLENE FOAM. All unicellular polypropylene foam wrapping material will be new, clean, and will conform to Federal Specification PPP-C-1797.

d. PACKING AND PREPARATION FOR DRAYAGE AND/OR STORAGE. The Contractor shall be required to perform all packing and crating services in accordance with the following:

(1) All packing shall be performed in a manner requiring the least cubic measurement, producing packages that will withstand normal movement and storage without damage to containers or contents and at a minimum of weight. Further, the number and weight of containers shall not be greater than necessary to accomplish efficient movement or storage. All containers must be properly sealed or secured.

(2) All finished surfaces whether wood, metal, or other material likely to be damaged shall be so protected as to prevent scratching and marring.

(3) The use of damp, wet, or unclean materials is prohibited.

(4) Care shall be exercised to prevent loss or damage of personal property in the process of packing, and the Contractor shall properly and amply protect property by utilizing proper protective measures and by stowing effects in a manner not likely to cause damage.

(5) For movement or storage, all fiber drums or dish packs shall be properly and clearly marked to indicate “TOP”, “THIS END UP”, or similar markings, and shall be so handled and placed.

(6) In the absence of any general or specific requirements or contract provisions, the services shall be performed in accordance with the best commercial practices.

e. PICKUP AND DRAYAGE. The Contractor is required to pick up personal property at locations designated in the service order and dray them to the Contractor’s warehouse subject to requirements hereinafter specified. Pickup and drayage shall be completed on the date specified on the DD Form 1164 unless the ordering officer gives advance approval to a change in date(s). Pickup or delivery shall be completed at the member’s/employee’s residence or warehouse between 0800 and 1700 hours unless prior approval is received from the member/employee or warehouseman. The Contractor shall complete wrapping/processing of items for storage, which is in addition to that required for drayage to the Contractor’s warehouse, and preservation of items for and during the storage period, no later than the close of business the third work day following the date of pickup of the property. When the prearranged time of pickup cannot be met, it is the Contractor’s obligation to notify the member/employee and ordering officer immediately. Clothing, mattresses, and fragile items, such as dishes, glassware, and lamps, shall be packed before being drayed. Items that do not require packing or crating may be moved in a loose condition and prepared for storage at the warehouse.

f. DISPOSITION OF CONTAINERS AND PACKING MATERIALS. All containers, cartons, and filler material required for packing and protection incident to movement shall remain with each lot until unpacking is performed at destination residence, whether or not the Contractor performs the unpacking services.

g. CONTRACTOR PERSONNEL. The personnel will be qualified to perform the assigned duties in the handling of personal property. They will be clean, neat, and courteous. If at any time, they appear to be under the influence of drugs or alcohol, use abusive language, or otherwise improperly perform according to provisions herein, they will be replaced by qualified personnel when requested by the Personal Property Shipping Office. Prison labor shall not be used in the movement of personal property belonging to members/employees of the Department of Defense.

C-3 SPECIAL REQUIREMENTS

a. BOOKS. Books shall be placed in cartons or boxes. All books of similar size shall be packed vertically together in rows. Pads of solid or corrugated fiberboard shall be inserted between rows and packed tightly, wedged with pads or paper if necessary to fill out the carton or box and to prevent chafing. Books normally shall be packed not more than two rows high in a container.

b. CHINAWARE, GLASSWARE, CROCKERY, LAMPS, CLOCKS, JARDINIERES, STATUARY, VASES, AND BRIC-A-BRAC. Use of a clean packing material or other modern method (cell wrap, cell pack, or cells and dividers) of packing is required for the packing of glassware, chinaware, bric-a-brac, table lamp bases, and other similar fragile items. Wrapping and materials used shall be in accordance with the best commercial practices for the items being packed. Items shall be wrapped separately, except groups of flat items may be wrapped in bundles if properly divided and cushioned. The heaviest items shall be placed in the bottom of the containers. Fiber drums, dish packs, and other containers shall be packed as compactly as possible. Padding shall be pressed gently but firmly around each item and as many pieces shall be put in a container as safely possible. Any surface or edge of an article that is fragile must be protected with cushioning. Stemware shall be packed in containers bottom side up, and bundles of plates and dishes shall be placed in containers on edge.

c. ELECTRICAL OR ELECTRONIC EQUIPMENT - AUDIO/VIDEO EQUIPMENT, MICROWAVES, FANS, HEATERS, PORTABLE STOVES, SUNLAMPS, VIBRATORS, AND SIMILAR MINOR APPLIANCES. When necessary to protect electrical equipment for safe transportation or storage, such equipment shall be completely wrapped in kraft-type paper or unicellular polypropylene foam and packed in a carton with enough padding to provide insulation necessary to prevent contact between articles of one article with another and to eliminate movement of any one article in the container. When packing is not necessary, the items shall be properly wrapped or padded for protection.

d. KITCHENWARE. All kitchenware shall be packed and padded into containers. The heavier items shall be kept to the bottom of the container.

e. LINENS, DRAPERIES, CLOTHING AND LIKE ITEMS. Linens, towels, bedding, draperies, and other items of this type shall be packed into cartons that shall be completely sealed at residence. Clothing shall not be stored in closet bags. Flat wardrobe cartons shall be furnished for clothing unless the ordering officer authorizes the use of upright wardrobes. When upright wardrobes are used, no articles other than clothing on hangers shall be packed therein. Hangers must be removed from clothing packed in flat wardrobes.

f. MIRRORS, PICTURES, PAINTINGS, GLASS OR MARBLE TABLETOPS, AND SIMILAR FRAGILE ITEMS. These articles shall be wrapped, properly cushioned, and packed in a crate or container (glass or mirror pack, dish pack) specifically designed for that purpose. When it is determined that crating of other than the above listed items is required, the Contractor must obtain approval of the ordering officer before performing such services. Not more than four articles shall be packed in any one crate or container. Specifications for packing mirrors are applicable to glass tops, glass faced pictures, and paintings. Such items shall be stored on edge. Marble tabletops shall be packed separately. Small pictures, mirrors, and other items of this type shall be packed carefully into cartons, and cushioned to prevent shifting or damage.

g. LAMPSHADES, ORNAMENTS, TOYS, ETC. All lampshades, Christmas ornaments, small toys, and other items easily crushed shall be wrapped and placed in cartons and shall be insulated from carton walls and from other items. Lampshades shall be wrapped individually with clean paper (not newspaper), or new unicellular polypropylene foam, placed in cartons, and cushioned to prevent shifting or damages.

h. SILVERWARE. Silverware shall be packed in cartons of proper size to fit articles being packed without loss of space. Each item shall be wrapped with nontarnish tissue paper (without sulphur) and pads shall be used to insulate and secure pieces in place. Cream pitchers, sugar bowls, and similar items shall be wrapped and cushioned in corrugated fiber cartons prior to being packed. Any items containing salt shall be emptied.

i. MATTRESSES. All mattresses, except those in hide-a-beds and/or sofa beds (see Paragraph j below), regardless of size or construction, including box springs, must be placed in cartons and completely sealed at residence per Paragraph C-2 c. (2). All cartons used, including those improvised on site, shall be new and have a minimum bursting strength of 200 pounds per square inch. Foam rubber and cotton mattresses shall be stored horizontally and not under pressure from other items.

j. UPHOLSTERED FURNITURE. Upholstered furniture, to include wicker and wood frame with cushions, shall be placed right side up on all legs on racks in special rooms or areas or in suitable containers so that nothing touches or presses against the upholstery. Mattresses shall not be removed from hide-a-beds and/or sofa beds which close in such a manner as to offer adequate protection; otherwise, they shall be removed and stored in accordance with Paragraph i above, and the inventory annotated accordingly. Removable cushions shall be stored with the master pieces.

k. RUGS. All rugs, rug pads and carpets shall be properly rolled (not folded) and protected at residence whenever necessary to provide safe transportation. All rugs, rug pads, and carpets will be placed in individual dust-free cylinders, bags/covers of proper length or individually wrapped in 60-pound kraft-type wrapping paper and secured with tape or twine. All rugs and carpets will be stored in tubes in a horizontal position without folding or crushing any portion of the rug, carpet, or pad. If rack storage is used, rugs cannot be stacked more than two high and no items can be stacked on top of rugs.

l. PHONOGRAPH RECORDS, TRANSCRIPTION TAPES, VIDEOCASSETTES, COMPUTER DISKETTES AND COMPACT DISKS. These items shall be packed and stored

in such a manner that the records, tapes, cassettes and disks are standing vertically and protected so as to prevent physical damage.

m. FIREARMS. All firearms shall be protected from loss and damage during drayage and storage. They shall be identified on the inventory in accordance with Paragraph C-5 and stored with the bulk of the lot unless a separate secured stored area has been previously approved by the Contracting Officer.

C-4 HANDLING AND OPERATING REQUIREMENTS

a. PREPARATION OF ARTICLES.

(1) Articles having surfaces subject to damage by scratching, marring, or chafing shall be wrapped, at the time of loading, in furniture pads, covers, or other acceptable wrappers which are part of the Contractor's regular equipment.

(2) All nuts, bolts, and screws removed from personal property in preparation for drayage or storage shall be placed in a suitable bag, properly labeled and securely attached to the article from which removed. Component parts of a master item, removed for any reason, shall be securely wrapped into package form, identified as to contents, numbered and cross-referenced on the inventory to the master item from which removed.

(3) All articles shall be removed from chests of drawers, bureaus, clothes hampers, etc., and packed in containers prior to drayage. However, for lots identified as pending overseas movement, light nonbreakable items may be packed in dressers, bureaus, and similar items. Articles/items which are packed in dressers and chests must be light in nature, nonbreakable and of a character not normally susceptible to pilferage. Further, the chest/dresser must be of a reasonably sturdy construction to accept the additional weight packed therein without undue stress being placed on the chest/dresser that may cause damage. When articles are determined to meet the above criteria and packing within a chest/dresser is acceptable, the packed articles must be wrapped/cushioned to prevent shifting and movement during transit. As a minimum, unprinted newsprint or other acceptable cushioning materials will be placed over the articles remaining in the chest/dresser and all void areas will be filled. Additionally, when articles remain in chests and dressers, the Household Goods Descriptive Inventory and/or warehouse receipt will be annotated to clearly and accurately describe the contents. The inventory will be further identified as Contractor packed.

(4) Nothing shall be packed in washers, dryers, refrigerators, freezers, stoves, or other major appliances except such items as electrical cords, connecting hoses and similar items which are required as an integral part of the appliance in its normal operation.

b. APPLIANCE SERVICING. Servicing, as used herein, consists of the following phases:

(1) Preparing the appliance at origin residence, as opposed to normal wrapping and packing already provided for, so that they will safely withstand drayage, handling-in, and storage.

(2) Reversing the preparation when property is drayed to destination residence as per Item VII of the Schedule of Services and Rates for Personal Property, (Section B). Servicing shall apply to major household appliances that have free-moving parts, mechanisms, attachments, or accessories, the movement of which, if not properly serviced, would either damage the appliance or render it inoperative. Such servicing shall be in accordance with recommendations of the equipment manufacturer. Examples of such appliances are washing machines, dryers, ironers, refrigerators, sewing machines, stereo systems, and other similar major appliance items. Servicing includes securing all loose and moving parts of washing machines, ironers, sewing machines, and similar items; securing the chassis of radio and hi-fi/stereo sets; and fastening motors. When property is drayed to the residence as per Item VII of the Schedule of Services and Rates for Personal Property, servicing includes loosening chassis and similar functions necessary to place the appliance in an operating condition. Servicing does not include repairing the mechanical parts of the appliance at origin or when delivered to residence. Examples of disconnecting or reconnecting services not authorized are: removal or installation of television antennas; removal or installation of air conditioners; or plumbing, electrical or carpenter services, etc. When an appliance has been serviced at origin, such appliance shall be tagged, labeled, or clearly marked to indicate what must be done to replace the item in working condition at destination. In the event that servicing is not required, as per manufacturer's recommendation, a tag or label shall be affixed to indicate "no servicing required". Any and all servicing shall be the responsibility of the Contractor, whether such servicing is accomplished by the Contractor or by a servicing activity engaged by the Contractor. The Contractor shall also take necessary measures to protect the interior parts of refrigerators, deep freezers, and similar items to prevent damage by mold or mildew during the storage period.

c. GUMMED TAPE, LABELS, ADHESIVES. Gummed tape, labels, or other forms of adhesive applied to surfaces of personal property for identification or protection will damage property if left on the property for extended periods of time. In the placing of labels for identification purposes, care shall be taken to place the labels on the backs, inside or underneath portions in order to avoid damage. Adhesives applied to protect property from damages that may occur in handling and movement to storage shall be removed prior to placing the property in the storage location of the warehouse.

d. MARKING. Articles shall be properly identified at the time of pickup by affixing a numbered tag or tape to the article or packed carton/container. The member's/employee's name and the contents of cartons and containers shall be indicated with a marker using general terms such as linens, dishes, kitchen-ware, mirrors, etc. Each article, carton, or container shall be assigned a number that must correspond with the piece number indicated on the inventory. Each lot shall be separately identified by being assigned a lot number; each article, carton, or container shall have the lot number affixed thereon. The type of identification used and the method of affixing it to the article shall be such as not to damage any article so identified. All containers having breakable or fragile articles shall have the words "Glass", "Fragile", or "Handle with Care" lettered on two opposite sides. Containers with articles to be kept upright shall have the word "UP" stenciled, hand-lettered or printed on four sides and within six inches of the top.

e. PROFESSIONAL BOOKS, PAPERS, AND EQUIPMENT (PBP&E) (Also known as PRO or PRO-Gear). PBP&E shall be identified by the member/employee and packed separately from personal property. These items must be clearly identified, listed separately from other

personal property on inventories and packing lists, and the containers must be weighed separately from the rest of the storage lots and the total weight of these items properly annotated on the documents. When actual weight of PBP&E cannot be obtained, the ordering officer may authorize the use of a constructive weight of 40 pounds per cubic foot and the Contractor shall annotate the inventory to indicate constructive weight.

f. EXPENSIVE AND VALUABLE ITEMS. When items are declared by the member/employee to be expensive and valuable and the member/employee determines the services as provided for herein are not adequate, special handling shall be provided at the request of the member/employee and additional charges, if any, for such special handling shall be at the expense of the member/employee. If the member/employee requests insurance coverage, the Contractor shall inform the member/employee how such coverage may be obtained.

g. MEMBER/EMPLOYEE-PACKED GOODS. The Contractor shall inspect all member/employee packed property to ascertain the contents, condition of the contents and that only articles authorized to be stored under this Agreement are contained therein. Furthermore, when the Contractor determines that property requires repacking, the Contractor shall perform such repacking. Once inspected or repacked, the cartons then become Contractor packed and will be so noted on the descriptive inventory. If the member/employee refuses to permit inspection or repacking, the Contractor shall request instructions from the ordering officer, prior to continuing the pickup of the item(s) in question. A record of the instructions received will be placed in the member's/employee's file.

h. ORIGINAL MANUFACTURERS' CARTONS. Any original manufacturers' carton will be inspected for proper packaging and to ensure it meets minimum carton specifications. If necessary, the contents will be repacked or the carton placed into a container that meets all required carton specifications, to include size and bursting strength.

i. DETERMINATION OF WEIGHTS. (Gross weight, tare weight, net weight, and constructive weight).

(1) The gross, tare, and net weight of each shipment will be provided by the Contractor, on a weight ticket obtained from a United States (US) Government scale (if available), or state certified public truck scale or platform scale. All public scales must be maintained in accordance with the regulations of the state, commonwealth or district having jurisdiction over the scales. All personnel designated to operate the scales shall be licensed, or otherwise qualified as weighmasters, as required by the regulatory body.

(2) Each weight ticket shall reflect the service member's/employee's name, rank/grade, service order number of the shipment, location/address of scales, and signature of the qualified weighmaster. No other alterations shall be made. The original of the weight ticket will be furnished to the ordering officer in accordance with Paragraph C-7 c, and a true copy will be retained by the Contractor, attached to the warehouse receipt or service order.

(3) The tare weight shall be obtained prior to the loading of any shipments, by weighing the vehicle with all pads, dollies, hand trucks, ramps, and any other equipment necessary to perform the contract. No persons shall be on (or in) the vehicle at the time of weighing. The

fuel tanks on the vehicle shall be full at the time of each weighing or, in the alternative, no fuel may be added between the two weighings when tare weighing is the first weighing performed. The gross weight shall be obtained, on a separate ticket, by the same procedures, after the vehicle has been loaded. The same weight ticket may be used only if both weights are obtained at the same scale. The net weight of the lot shall be obtained by deducting the tare weight from the gross weight.

(4) In the case of multiple shipments or partial loads on the same vehicle, the vehicle will be weighed under the same procedures for the initial tare weight. As each shipment is loaded, a gross weight ticket will be obtained. The gross weight for the previous shipment will subsequently become the tare weight for the next shipment.

(5) When no certified scale (US Government or State) is available at the point of origin, the gross weight shall be obtained at the nearest certified scale (US Government or State), either in the direction of the movement of the shipment, or in the direction of the next pickup or delivery. If no certified scale (US Government or State) is available at origin or any point en route, or at destination, a constructive weight of seven pounds per cubic foot, of properly loaded van space, may be used, if approved by the ordering officer.

(6) A Contractor may substitute a certified platform scale for obtaining the net weight of a shipment. In the event the lot is containerized, a separate weight ticket for each container is required. The Contractor will annotate the following on the weight ticket: "Platform Scale Used".

(7) Additionally, the ordering officer or their representative shall be permitted to accompany in their own conveyance, observe, and inspect, any weighing procedures, at no additional expense to the Government.

(8) When a lot has been removed from storage and weighed two or more times prior to delivery to a residence and each subsequent weight obtained is found to be at least 200 pounds less than the weight originally obtained by the Contractor, payment for services performed shall be based on the lowest weight. In the event the Contractor has been paid on a higher weight, the Contractor shall make reimbursement to the US Government. When an inventory item is missing at destination, the nontemporary storage Contractor will not be responsible for the weight variance if the item was tendered from nontemporary storage to the carrier. Should the reweigh exceed the storage weight by 200 pounds, action will be initiated by the ordering officer for reimbursement of payments to the storage Contractor based on the lowest weight. When a local delivery is requested, only one weight is necessary.

j. PACKING AND LOADING AT ORIGIN. Packing and loading shall include removing from the member's/employee's premises all empty containers, packing materials, and other debris accumulated incident to packing and loading.

k. DELIVERY AND UNLOADING. The Contractor shall deliver the property to the destination indicated on the DD Form 1164 which includes: unloading at member's/employee's residence; reassembly of items disassembled for storage; servicing of appliances; recording

overage, shortage or damage, and one time placing of items in designated rooms in accordance with the member/employee.

l. UNPACKING AT DESTINATION. The Contractor shall perform unpacking services as indicated on the DD Form 1164, and services shall be completed at the member's/employee's residence between the hours of 0800 and 1700 unless prior approval is received from the member/employee. On a one- time basis, all boxes, cartons, and/or crates will be unpacked and the contents will be placed in a room designated by the member/employee, e.g., kitchenware in the kitchen, unpacked and placed on kitchen counters, tables, or other flat surfaces. The unpacking will be performed at the time the property is delivered to the residence unless specifically waived in writing by the member/employee at the time of delivery. The waiver will be held in the Contractor's file for further reference. When unpacking services are ordered, they shall consist of the following:

(1) Unpacking all containers and placement of the contents in such a manner as to be readily available for use by the member/employee.

(2) Jointly, with the member/employee, record loss and damage found during delivery and unpacking and furnishing the member/employee three signed copies of the Joint Statement of Loss or Damage at Delivery (DD Form 1840) (Attachment 7).

(3) Removing from the member's/employee's premises all empty containers, packing materials, and other debris accumulated incident to unpacking unless otherwise specifically requested in writing by the member/employee.

(4) Servicing of household appliances in accordance with provision C-4 b.

m. SPECIAL SERVICING. Articles of an unusual nature may require special servicing for safe transportation and storage. The approval for servicing these articles will be negotiated between the ordering officer and the Contractor prior to performance. Prices are expected at fair and reasonable levels, with the Government as a preferred customer. Rate comparison techniques should be used to assure the reasonableness of the lowest rate available. The agreed rate is a one-time purchase of the services needed and has no effect on subsequent required services. When it is determined by the ordering officer that these articles require special handling that the Contractor is unable to perform, the ordering officer may authorize the Contractor to utilize a professional third party and/or an hourly rate may be used as a basis for the performance of such services. Authorization and payment for the required services will be shown on the DD Form 1164 as required by Clause K-16 (Extras). The agreed upon services and cost of these services will be noted on the DD Form 1164. The Contractor's invoice will include the third party's paid billing as the substantiation of costs.

C-5 INVENTORY

a. In conjunction with the member/employee or the member's/employee's authorized agent, the Contractor, at the time of pickup, shall prepare an accurate, legible inventory (an original and three copies) listing of all items received, including contents of cartons in general terms such as dishes, linens, etc., bearing the signature of the member/employee or the member's/employee's representative and the Contractor or the Contractor's representative, both certifying to the

correctness of the inventory. The listing of articles shall be specific to include make, model, color, and serial number when these are visible on the outside of the item. If the serial number is not available, annotate the inventory with “No Serial Number”. Such words as “household goods/personal property” or other general descriptive terms shall not be used. Special care shall be exercised to ensure that the inventory reflects the true condition of the personal property as received. General terms such as marred, scratched, soiled, worn, torn, gouged, and the like shall not be used unless they are supplemented with an actual description of the degree and location of the exception. Ditto marks and other types of lines, arrows, etc. shall not be used.

b. The listing of upholstered furniture and rugs shall be specific as to color, description (striped, floral, etc.), number of cushions, or approximate rug size. All washers, dryers, major electrical appliances and audio-visual equipment will include make, model, and serial number. All firearms shall be inventoried as separate articles on the inventory showing the make, model, serial number, and caliber or gauge. Motorcycles shall be inventoried as one article, listing its serial number, make, model, year, and mileage when easily available and open to view on the exterior of the item. DD Form 788-2, Private Vehicle Shipping Document for Motorcycle, (Attachment 9) or similar form, may be used to annotate descriptive information and condition of motorcycle.

c. The inventory and service order for storage lots designated for overseas delivery shall be clearly marked “for overseas later”. Upon ordering out of storage, a descriptive listing of inventory item numbers, i.e., five, ten, and fifteen of the lot, will be listed on the DD Form 1164 and coordinated between the Contractor and the shipping activity to confirm the proper items/lot is being released for shipment overseas.

d. The Household Goods Descriptive Inventory (Attachment 4), a format or a facsimile thereof containing the same information, shall be used by the Contractor to meet the inventory requirements contained in this provision, a. through f.

e. Exception and location symbols used to describe the condition of the items listed on the inventory must be as shown in Attachment 4.

f. The inventory shall show

(1) Contractor’s name and mailing address.

(2) Destination completed to identify and locate the warehouse(s) in which the lot is stored.

(3) Member’s/employee’s name, grade or rank, and social security number.

(4) Pickup address.

(5) Service order number.

(6) Agreement and effective modification number.

(7) Contractor’s lot number.

(8) Page number and number of pages.

(9) Total number of items covered by the inventory.

g. A legible copy of the completed inventory shall be furnished to the member/employee or the member's/employee's agent at the time of pickup. The original and one copy shall be furnished to the using activity and a legible copy retained by the storage Contractor. When a combination inventory-warehouse receipt is used, the original and one copy will be furnished to the ordering officer and the Contractor shall retain a legible copy. In the event that, upon checking the lot into the warehouse, items are discovered which were omitted from the inventory at residence, they shall be added to the original and annotated as additional items not shown on the copy furnished at time of pickup.

h. For those items separated and identified as expensive and valuable items by the member/employee or the member's/employee's agent, and authorized by the ordering officer, a detailed inventory will be prepared by the Contractor and certified by the member/employee or the member's/employee's agent. This special high value inventory will become an addendum to the total inventory bearing the signature of the Contractor or the Contractor's representative. The listing of expensive and valuable items in cartons will be in specific terms such as: "eight silver forks, eight silver spoons, one silver ladle."

i. When the storage Contractor handles a lot out to a carrier, the Contractor will furnish the carrier's driver with two legible duplicate copies of the nontemporary storage inventory and will, in conjunction with the carrier's driver, check each item out of the storage lot in accordance with such inventory. If, at the time each item is checked out, there is a difference in the condition of the items from that listed on the nontemporary storage inventory, the carrier's driver will prepare an exception sheet noting thereon any shortage/overage, or differing conditions, cross referenced to the original Contractor's inventory. If no new damage or loss is discovered, an exception sheet will be prepared stating "no differences noted", signed and dated by the warehouseman and driver. When the carrier's driver elects to make a new inventory, any differences as to shortage/overage or conditions, not listed on the original inventory, will be shown on an exception sheet as described above. In the event the opinion of the carrier's driver and the storage Contractor's representative differ as to shortage/overage or condition, both opinions will be listed on the exception sheet and separately identified as to source. Both the carrier's and the storage Contractor's representative will sign and date the exception sheet, each retaining a legible copy for their files. Such exception sheet will remain an internal industry document. In the event a claim is filed with the military activity, the carrier and/or storage Contractor will furnish legible copies of the exception sheet to the claims officer. The Contractor shall also furnish a legible copy of the exception sheet to the Contracting Officer when requested.

C-6 STORAGE REQUIREMENTS

a. Preparation of Articles for Storage.

(1) Items having painted, enameled, porcelain, polished, or finished surfaces of other kinds shall be so protected as to prevent scratching, marring, or other damages to the surfaces

from other items in the lot or from dust, moisture, etc. Articles having such surfaces shall be padded and wrapped or covered.

(2) Articles such as garden tools, coil springs, television antennas/satellite dishes, etc., not subject to deterioration by dust need not be wrapped, but corrugated paper or other material shall be used to separate these articles from finished articles in the same lot.

(3) The member/employee shall ensure that power-driven equipment has been drained of all gasoline at the residence. The Contractor shall tag or label to verify that no gasoline is present. All batteries shall be removed by the member/employee, except for those lots identified as remaining in storage for less than one year, and then the battery may remain. However, whenever the battery remains in the piece of equipment the cables must be disconnected from the battery terminals and the cable ends must be taped.

(4) The member/employee has the obligation to remove all the gasoline and the battery from a motorcycle prior to pickup for storage. Also, to lubricate the gas tank interior, carburetor, control cables, and drain the radiator system. Oil does not require removal. Keys will remain with the Contractor, in the member's/employee's file, to facilitate handling and movement. Upon release from storage, the key will be placed in a suitable bag and affixed to the handlebars of the motorcycle. For lots identified as pending overseas movement, the battery may remain in the motorcycle. However, the member/employee must disconnect and tape the ends of the battery cables.

(5) The member/employee has the obligation to properly prepare their computer for storage to include using the utility disk to lock down any hard drives and inserting the protective blank in any floppy drive(s).

b. PRESERVATION OF ITEMS FOR STORAGE

(1) Insecticides or repellents shall be used to provide constant protection for all materials made wholly or partially of wool and other materials subject to insect damage.

(2) Rugs, rug pads, and carpets, in addition to an application of insecticides or repellents, shall be placed in individual dust-free cylinders or bags/covers of proper length or individually wrapped in 60-pound kraft-type wrapping paper and secured with tape or twine. However, when rugs, rug pads, or carpets are stored in cold storage rooms, or in fumigated rug rooms that are sealed against entrance of dust and escape of fumigants, wrapping is not required. Rolled rugs, pads, and carpets shall be stored in rug tubes that shall be so constructed that items shall not be bent. Rugs, pads, or carpets shall not be folded for drayage or storage. Rust-free wire tags or other suitable identification labels not injurious to the fabric indicating the lot number, item number and member's/employee's name shall be affixed to the rug and the outside container or wrapping. The warehouse location of rugs, rug pads, and carpets shall be recorded as prescribed by provision C-6 d.

(3) Upholstered furniture, in addition to the application of insecticides or repellents, shall be placed in individual containers or covered by prefabricated covers of paper or plastic, or individually wrapped in 60-pound kraft-type paper and secured with tape, twine or equivalent, or shrink wrap materials. When clear plastic coverings are used, care shall be taken to prevent

fading or bleaching of materials. When such articles are stored in fumigated rooms or in individual containers that are sealed against entrance of dust and escape of fumigants, wrapping is not required. Items will be identified as required in provision C-6 d. (3).

(4) Items, other than those listed above, susceptible to insect damage shall be stored in suitable, sealed containers, protected with insecticides or repellents.

(5) Pianos and organs shall be stored separately whether the Contractor employs "open" or pallet storage. Such instruments shall be shrouded in 60-pound kraft-type paper, or in cloth; insecticides or repellents shall be placed near the felts. Care shall be taken to store such instruments in areas of the warehouse where changes in humidity and temperature are at a minimum. When fumigated piano storage rooms that are sealed against the entrance of dust and escape of fumigants are used, the above specifications shall not apply. Identification will be in compliance with provision C-6 d. (3).

(6) The Contractor shall be responsible for ensuring that all chemicals used for repelling insects or vermin do not have a harmful effect on any of the stored materials.

(7) The Contractor shall take all necessary measure for pest control and prevention of mold or mildew and shall maintain periodic inspections as frequently as necessary to prevent damage to personal property in storage. The Contractor shall maintain, as a minimum, a monthly written record of pest control (insect and rodent) inspections and treatments.

(8) The Contractor shall be responsible for ensuring that firearms are protected from loss, properly marked and stored in the center of the vault or bulk of the lot unless the Contracting Officer has previously approved a separate secured storage area.

(9) Motorcycles shall be placed upright, fully covered, and wrapped in a protective material with nothing touching or pressing on it and may be stored in a separate area of the warehouse. Identification will be in compliance with provision C-6 d. (3).

(10) Lawn mowers and other power driven equipment shall be stored in an upright position at the base of the shipment. If stored in a separate area of the warehouse, identification will be in compliance with provision C-6 d. (3).

(11) Boats on trailers will be stored on the trailer. Small boats not on trailers can be stored in racks or a separate area in such a manner so as to prevent damage. All items not permanently affixed to the boats shall be removed and packed to include inventorying and tagging. The member is obligated to, and Contractor shall, ensure that gas tanks are empty and the batteries removed (except that batteries in boats stored for 1 year or less may remain, provided the cables have been disconnected and ends taped). The member/employee shall remove the drain plug and if not permanently attached to the boat, place it in a cloth bag, or equivalent and tie it to the boat. Identification will be in compliance with provision C-6 d. (3).

c. STORAGE AREA

(1) Areas assigned for preparation and storage of personal property shall be such as to prevent pilferage or damage by sunlight, heat, water or fire. Personal property shall be stored in

areas that are dry, clean, free from dust, vermin and rodents, have adequate fire protection, and be accessible for routine inspection.

(2) Minimum clearance above stacks, width of aisles, accessibility of fire aisles, distribution of fire extinguishers, etc., shall be in accordance with existing local ordinances, the National Fire Protection Association codes, recommendations and standards and other nationally recognized codes and standards, whichever is more rigorous.

(3) Care shall be taken to ensure that personal property is not exposed to hazardous materials or operations inside or outside the warehouse. Flammables/combustibles will be kept in closed metal containers when stored in the warehouse. All combustible material outside the facility must be stored a minimum of 20 feet from the building, i.e., vaults, containers, trailers and vehicles. Severe hazards, as determined by the Contracting Officer, may require further movement and/or a safety certification by the servicing fire department. Local conditions that prevent 20 feet clearance will also require a fire safety certification from local authorities.

(4) "No Smoking" signs shall be conspicuously posted in all storage areas and smoking restrictions shall be rigidly enforced. Smoking is prohibited during all phases of the storage program. This includes in the warehouse, around warehouse door areas, during the loading or unloading of vans, and at any time that smoking would endanger the personal property.

(5) Waste or refuse shall be removed from the storage areas at the close of business each day or kept in metal containers with tight-fitting metal lids.

(6) Docks, aisles, driveways, and entrances shall be kept free of storage and equipment not being currently handled or operated.

(7) Personal property shall be stored on skids, dunnage, pallet bases, elevated platforms, or similar storage aids maintaining a minimum of at least two inches clearance from the floor to the bottom portion of the stored property. This elevation requirement shall apply after the three working day handling-in period. Items waiting for the completion of handling-in services will be protected at all times. Mezzanines, decks, or other permanent structures with solid flooring will also require two-inch elevation of stored property. Containers or property will not be stored in contact with exterior walls. Height of personal property properly stacked loose shall not exceed 10 feet. Trashcans, extension ladders, lawn mowers, TV antennas/dishes, swing sets, and other like outdoor items are excluded from these requirements. Segregated items shall not be stored on top of movable storage containers or storage boxes.

(8) Heating, electrical, plumbing, and other systems shall be in good working order, maintained in sound condition and meet all requirements of local ordinances or nationally recognized codes. Extension cords shall not be used in the warehouse, except a heavy duty cord may be used to operate hand held power equipment/machines while in use.

(9) The operation and/or garaging of all power equipment within the warehouse, with the exception of forklifts, pallet jacks, sweepers, or other items specifically authorized by the Contracting Officer or the fire department is prohibited. Warehouses must be operated in accordance with nationally recognized codes and standards (American Insurance Association, National Fire Protection Association, American Standards Association, etc.). In addition, local

codes and standards will be adhered to. Gas pumps and other fuel storage shall meet all provisions of the local ordinances and nationally recognized codes and standards, whichever are more rigorous. Electrical storage batteries shall not be recharged in the warehouse unless proper procedure, in accordance with all local and national fire codes and standards, has been taken to prevent explosion from the gas generated.

(10) Automatic sprinkler systems require inspection by licensed or qualified sprinkler maintenance Contractor on a quarterly basis, within a 90-day period in accordance with National Fire Protection Association, etc. A licensed Contractor shall be required where state or local authorities license such Contractors. Fire detection and reporting systems require inspection of the electronic monitor by a licensed or qualified Contractor on a monthly basis, within a 30-day period.

(11) Fire extinguishers shall be inspected and serviced at a minimum annually, and properly mounted in accordance with fire codes. All gas or electric warehouse handling equipment must be equipped with the proper type fire extinguisher.

d. LOCATOR SYSTEM AND LOT IDENTIFICATION. The Contractor shall maintain an up-to-date locator system that will permit the prompt identification and location of each lot and individual items required to be stored separately.

(1) An example of an acceptable locator system appears at Attachment 5. An acceptable system requires the following minimum control data for the pallet/box locator sheet: Owner's Name, Rank/Grade, Lot Number, Date in and Type of Storage, Pallet/Box Number, and Location. All pallets/boxes must have an assigned, distinctive number.

(2) The bottom portion of Attachment 5 reflects a numbering system for control of items by inventory number within each pallet/box. Use of this portion of the locator form is optional, but highly recommended.

(3) Segregated items, such as rugs, rug pads, upholstered pieces, pianos, organs, oversized items, lawn mowers, garden tractors, tillers, bicycles, TV antennas, satellite dishes, ladders, tires, motorcycles, and boats, will have an identity tag reflecting the owner's name, lot number, and item number. This tag will be fastened to the item by rustproof wire, string, or plastic.

(4) The master locator sheet, reflecting all information on the pallet/box locator sheet and in addition, Service Order Number, each Pallet/Box Number and its location, and a list of segregated items and location, will be kept in the office jacket file. A duplicate copy of the master locator sheet will be kept in either the warehouseman's files, if physically maintained in the warehouse, or affixed to a pallet/stack if warehouse files are not maintained.

e. WAREHOUSE SECURITY. The Contractor shall have established protective procedures for the facility(ies) to ensure the adequate safeguards have been taken to preclude unauthorized access. Particular attention shall be given to doors, exterior door hinges, windows, skylights, roof vents, cupolas, metal side panels, etc., to ensure that they do not permit simple entry on the part of unauthorized persons. Specific procedures are to include:

(1) Contractor's employees within their area of responsibility must be counseled on the importance of security and shall be made aware of specific security procedures established by the Contractor for each storage facility.

(2) Movement of outsiders within a warehouse shall be closely controlled and monitored by the Contractor and/or his/her employees.

(3) Two keyed locking mechanisms are required on all warehouse access doors, with keys issued to authorized employees only. An electronic detection system, approved by the Contracting Officer, may be substituted for one of the required locking mechanisms.

(4) Access walk-in doors, warehouse doors and warehouse/office windows which would permit warehouse entry by breaking glass panes, requires installation of heavy metal mesh or bars, or installation of an approved electronic detection system.

(5) The doors on all closed vans will be secured with heavy-duty (case hardened) padlocks or surface key locks.

C-7 CONTRACTOR'S DUTIES - LOCATION OF STORAGE FACILITIES

a. The Contractor shall complete pickup and drayage services ordered hereunder on the date specified on the DD Form 1164 for such services and shall proceed in compliance with provisions of Paragraph C-2 e. The Contractor shall begin performance of handling-in services upon arrival of the property at the warehouse, to include placing the property within the facility, and shall complete placing the property within the facility no later than three working days following the date of pickup. Items waiting for the completing of handling-in services will be protected at all times. When the Contractor chooses to allow the personal property to remain on the truck until the next working day, he/she will be held liable for any loss or damage occurring during this time without regard to cause. The Contractor shall have three working days from the date of pickup to complete the remaining handling-in services. The Contractor shall begin performance of handling-out services as ordered; however, the Contractor shall be given advance notice of at least five working days.

b. The Contractor shall treat each lot placed in storage as a result of issuance of a DD Form 1164 as a separate entity for the purpose of separation, identification, and delivery and shall otherwise comply with all laws and regulations with respect to separate identification.

c. The Contractor shall furnish to the ordering officer within seven working days after receipt of each lot of personal property, the weight certificates, with the original and one copy of a nonnegotiable warehouse receipt for each lot stored. The warehouse receipt shall, in addition to the information required by law, contain the following:

(1) Member's/employee's name, grade or rank, and social security number.

(2) Member's/employee's mailing address as provided in the service order.

(3) The number of this Agreement, as modified, and the service order.

(4) Inventory description of personal property in accordance with provisions of Paragraph C-5 (see Attachment 4).

(5) Net weight determined in accordance with provisions of Paragraph C-4 i.

(6) Location of warehouse, as shown on the inventory form.

(7) Contractor's number for the lot.

(8) Notation of any overage, shortage, or damage.

(9) Liability in accordance with this Agreement.

(10) First and last inventory item numbers and total number of inventory items. The use of a legible combination inventory-warehouse receipt form is acceptable if the form contains all the information required by law and this Agreement. When storage or other services are at Government expense, the provisions of the service order and this Agreement shall govern in the event of any inconsistency between the service order and Agreement on the one hand and the warehouse receipt on the other. For this purpose, the term "inconsistency" is extended to include any provision of a warehouse receipt that is in addition to, or in excess of, the provisions of a service order or this Agreement.

d. In the event that, after coming into the custody of the Contractor, personal property is stolen, lost and/or damaged during attempted theft, lost and/or damaged as a result of fire (including water damage incident to a fire), flood, earthquake, tornado, or any other similar type of occurrence, or if the property is subject to the probability of loss and/or damage so that without preventative measures being taken, loss and/or damage is likely to result, the Contractor shall immediately notify the Contracting Officer by the quickest means of communication, and the Contractor shall take immediate action to protect the property from further loss and/or damage. The Contracting Officer shall immediately conduct an investigation into the circumstances surrounding the incident to determine the responsibility for the incident and/or release of such responsibility on the part of the Contractor. The Contracting Officer reserves the right to award/not award any business during the period of the investigation.

(1) The Contractor shall immediately, at its own expense, proceed to unpack all affected containers, boxes, cartons, etc. The Contractor shall take such steps as are necessary to properly dry items that are wet or damp. The Contractor shall submit within 10 working days, or such longer period as the Contracting Officer may authorize, in writing, a report, at no cost to the Government, of the loss and/or damage to each item or article listed on the inventory or warehouse receipt, in duplicate, to the ordering officer(s), with a copy to the Contracting Officer. In addition, the Contractor shall, as directed by the ordering officer, accomplish dry cleaning, laundering, oiling finished surfaces with an appropriate furniture oil, and other similar preventative measures, and repack and restack the items for continued storage. Reimbursement, if authorized by the Contracting Officer, to the Contractor for work done in conjunction with avoiding or mitigating damages due to disasters covered by this provision shall not exceed actual costs and shall include no direct or indirect element of profit to the Contractor. The Contractor shall maintain a complete record of all labor and material (by lot) used in carrying out these duties and responsibilities. In no event will the Government be financially responsible for any

costs included in the Contractor's insurance coverage for which his/her insurance carrier assumes the responsibility for payment.

(2) Costs incurred by the Contractor incident to the performance of the services directed by the ordering officer shall be borne initially by the Government subject to a final decision by the Contracting Officer of the Contractor's liability. The Contractor shall not dispose of any damaged items or articles except with the written approval of the ordering officer.

(3) No action taken by the Contracting Officer under this provision shall in any way constitute a waiver of the liability imposed by Section H-6 (Liability for Care of Property), hereof upon the Contractor who shall continue to be liable in accordance with the provisions thereof as if no action had been taken under this provision, nor shall it be deemed to constitute a waiver of any other liability imposed by law or by any of the other provisions of this Agreement.

(4) In any other cases of shortage or damage to personal property while in its possession, custody, or control, the Contractor shall, without additional cost to the Government, furnish to the ordering officer a complete report of the incident, in duplicate, with a copy to the Contracting Officer, within five working days, following the detection and/or occurrence.

e. The Contractor agrees that while personal property remains in a warehouse under the provisions of this Agreement, the Contractor will maintain such warehouse in accordance with the Department of Defense fire protection standards and recognized national and local fire ordinances or codes, to include National Fire Protection Association recommendations and standards.

f. Whenever a change in business organization or corporate structure (e.g., stock sale/transfer, name change, officer change, or sale) is anticipated or planned, the Contractor shall notify the Contracting Officer immediately, but in no event later than 30 days prior to effecting the change. The Contractor agrees to notify the Contracting Officer, in writing, immediately when changes (e.g., bankruptcies, foreclosures, warehouse seizures, levies, search warrants, etc.) occur which may affect performance under the Agreement or responsibility in accordance with the FAR.

g. The Contractor shall not release personal property from storage during the storage period except upon the written authorization of the ordering officer.

h. The Contractor shall procure warehousemen's legal liability insurance and furnish to the Contracting Officer a certificate of insurance from the insurance company (see Attachment 3) to cover personal property stored in the Contractor's warehouse(s). The Contractor shall:

(1) Maintain coverage in force for property accepted by the Contractor under contract for any Government agency.

(2) Maintain coverage in minimum limits of $1.25 per pound at each location.

(3) Provide a 30-day advance written notice to the Contracting Officer in event of cancellation or any material change and/or reduction in the coverage. Upon cancellation of the

present insurance policy, the Contractor must provide evidence of continuing insurance to the Contracting Officer at least 10 days prior to cancellation date of present policy.

(4) Maintain deductibles in any policy which are applicable on an occurrence basis and which do not exceed $100.

(5) Maintain Warehousemens' Legal Liability Insurance with an underwriter who maintains a policyholder's rating of "A" or better in the current issue of Best's Insurance Guide. A Reinsurance Assumption Endorsement may be executed by an underwriter to meet the required criteria.

i. The Contractor shall store personal property only in facilities listed below:

LOCATION (Street Address, City, State, Zip Code)	FIRE CLASS	WEIGHT LIMIT	WAREHOUSE NO/CODE

Note: At no time shall the total weight stored exceed the weight in pounds authorized for each location. In order to ensure that limits indicated for each location are not exceeded, a record will be maintained for each location reflecting the number of lots and total weight of lots stored by the Government under this and other Agreements.

j. In cases where an insurance carrier of the member/employee, or Contractor, assumes responsibility for the cost or makes payment to the Contractor for any or all of the preventative measures, the expenses of which are to be borne by the Government, the Contractor shall, as soon as practicable, notify the Contracting Officer thereof. Where the Government has already made payment, the Contractor shall, in accordance with the direction of the Contracting Officer, reimburse the Government to the extent that the insurance carrier has made payments.

k. The Contractor shall, without additional expense to the Government, be responsible for obtaining any necessary operating authority, licenses and permits prior to award of a resultant contract and for complying with all laws, ordinances, statutes and regulations in connection with the furnishing of the services herein.

SECTION D - RESERVED

SECTION E - INSPECTION OF TRANSPORTATION (FAR 52.246-14)

The Government has the right to inspect and test the Contractor's services, facilities, and equipment at all reasonable times. The Contractor shall furnish Government representatives with the free access and reasonable facilities and assistance required to accomplish their inspections and tests.

SECTION F - PERFORMANCE PERIOD

The estimated period of storage shall be set forth on service orders issued in accordance with Section H-3 (Service Orders).

SECTION G - CONTRACT ADMINISTRATION DATA

G-1 PAYMENT ADDRESS

Indicate below the address where payment should be mailed.

_____

_____

_____

G-2 INVOICES

Invoices shall be submitted in original and four copies to the ordering officer unless otherwise directed by the ordering officer. Mechanized invoices may be used provided they satisfy the requirements of the FAR and supplements thereto and accounting practices of the individual military Services/Agencies. Government furnished invoices must be used when provided. Invoices shall be submitted (a) monthly with respect to pre-storage, handling-in, handling-out, and post-storage services and (b) quarterly with respect to storage. Either consolidated or single lot quarterly invoices for storage shall be submitted and shall contain the following information for each lot number.

(1) Basic Ordering Agreement Number and rate modification number.

(2) Service order number.

(3) Period of storage for which payment is claimed.

(4) Item designation of services for which payment is claimed from the Schedule of Services and Rates for Personal Property, (Section B).

(5) Contractor's lot number.

(6) Weight as determined in Paragraph C-4 i.

(7) Member's/employee's name(s), grade(s) or rank(s), and social security number(s).

(8) The fund citation(s) appearing on initial or supplemental service order(s).

SECTION H - SPECIAL CONTRACT REQUIREMENTS

H-1 RATE SUBMISSION

a. Rates will be submitted by the Contractor on company stationery/letterhead or on the Schedule of Services and Rates for Personal Property (Section B). Rate decreases may be

submitted on or before the fifteenth of any month to become effective on the first day of the second subsequent month. Rate increases may only be filed to become effective 1 May or 1 November. Rates submitted will remain in effect until revised as provided herein. Revised rates will be incorporated into the Agreement by modification. Rate submissions must be postmarked no later than the fifteenth of the entry month, regardless of weekends and holidays. Each rate item is considered individually. Increases for any single item can be accepted only during the period for increases. All rates become effective on the first calendar day of a given month.

b. Contractors must submit offers for all zones and on all items enumerated in the Schedule of Services and Rates for Personal Property (Section B). If there is to be no charge for an item, an entry such as “No Charge”, or the letters “NC”, must be made in the unit price column of the schedule. If the Contractor does not have operating authority for a zone listed on the schedule, an entry of "No Operating Authority" or “NOA” must be entered in the unit price column of the rate schedule. When rate schedules are filed at more than one installation, the rates for Item I - Packing, Item II – Special Services (Wardrobes/Hi-Value Items), Item IV - Handling-In, Item V - Storage, Item VI - Handling-Out and Item VIII - Unpacking, must be the same for each installation. For example, the price of Item I must be identical to the price for Item I in a second rate schedule submitted for another installation.

c. Contractor must submit a properly completed Certificate of Independent Price Determination (Attachment 1) with all rate filings.

d. The rate schedule is intended to be all-inclusive. The ordering officer, in writing, may approve payment for unusual service requirements in advance, depending on the specifics of the individual move.

e. The signing of this Agreement is a certification that the prices shown herein are no higher than the rates charged the most favored customer being furnished the services contemplated herein.

H-2 USING ACTIVITIES - ORDERING OFFICERS

a. The Contracting Officer executing this Agreement shall notify the Contractor, in writing, of the names and locations of using activities authorized to issue service orders for personal property under this Agreement. The Contracting Officer of each using activity shall notify the Contractor and the Contracting Officer, in writing, of the names of all ordering officers authorized to issue service orders for the using activity under this Agreement.

b. When the ordering officer determines that the member/employee is no longer entitled to storage of personal property at Government expense, the ordering officer shall give the Contractor, in writing, a 30 day notification of such determination. Copy of this notification is provided to the member/employee. The ordering officer shall also provide the Contractor with the member’s/employee’s permanent mailing address. At the expiration of the entitlement period, the ordering officer shall deliver to the member/employee the original copy of the warehouse receipt and/or combination inventory-warehouse receipt for the personal property and the Contractor shall thereafter recognize the member/employee as the depositor of the personal

property and look to the member/employee for payment of such future charges not payable by the Government.

c. The Government shall be liable only for payment of charges resulting from the performance of services, furnishing of materials or facilities, as ordered by the ordering officers.

d. Except to the extent of service order(s) issued hereunder, the Agreement shall not constitute a contractual obligation of the Government or obligate Government funds in any way.

H-3 SERVICE ORDERS

a. When a using activity requires the service of a Contractor, the using activity ordering officer will notify the Contractor that, the Contractor's offer has been accepted, the estimated weight of the personal property involved, and any other information as may be pertinent. This acceptance may be oral or in writing but oral acceptance will be followed by written confirmation (DD Form 1164).

b. When a Contractor has the facilities available and capability to perform the requested services, the Contractor shall advise the ordering officer of the acceptance of the order to perform and provide a lot number. Rates in effect on the date of offer are the rates applicable and thereafter used. If the Contractor cannot continue its offer during a given period of time or at a specific storage facility, the Contractor will so notify the ordering officer orally. Written confirmation must be sent to the ordering officer and the Contracting Officer. Selective refusal, i.e., a Contractor's failure to honor its offer on a selective basis indicating continuous avoidance of service orders by size or service area is a violation of this clause and may be grounds for termination as well as a determination the Contractor is not responsible.

c. To confirm the acceptance, the ordering officer shall issue a DD Form 1164 incorporating the terms of the acceptance, within the time set forth in the Contractor's offer of services. Upon receipt of the service order, the Contractor shall be obligated to furnish the specified services in accordance with the provisions of said service order and this Agreement. An enforceable contract is entered into when the Contractor receives the Government service order for the specified services in accordance with the terms and conditions of this Agreement. Upon receipt of the initial service order (with respect to any lot of personal property), the Contractor shall be obligated to furnish such additional services listed in the Schedule of Services and Rates for Personal Property (Section B), or authorized under Clause K-16 (Extras), as may be ordered by supplemental service orders in effect at the time of the initial order. Service orders shall not exceed $10,000. In the event a service exceeds this amount, an additional order will be issued under the most current Agreement.

d. Initial service orders shall be for a period ending on the day preceding the first day of the succeeding Government fiscal year (or in the case of temporary storage, for a period ending not later than six months thereafter). In each case, the service order shall be renewable, at the option of the Government, for four successive fiscal years on an annual basis (or such lesser period as the services are required) at the same rates and on the same terms as in effect under the initial service order. Renewal shall be evidenced by written notice to the Contractor. The date of performance of, and citation of funds for, handling-out and post-storage services shall be

included in a supplemental service order. For lots remaining in storage under this Agreement past the fourth successive fiscal year, the active Contractor shall be obligated to negotiate rates not to exceed his/her present rates for an additional four successive fiscal years. For inactive Basic Ordering Agreements, the Contracting Officer will negotiate the rate on an annual basis.

e. When it is known by the ordering officer, prior to the issuance of a service order, that a portion of the member's/employee's personal property will be withdrawn at Government expense for subsequent shipment, and the other portion will remain in storage, two separate service orders shall be issued and the transaction treated as two lots which shall require two inventories and two warehouse receipts. When the ordering officer does not know this information and the member/employee is, subsequent to storage, entitled to partial removal, a supplemental service order shall be issued for handling out of only that portion of the lot which must be handled to permit removal of the property for shipment, and handling-in for the portion which must be restored. Actual weight must be determined by weighing the articles released from storage and subtracting this weight from the original storage weight. The Contractor shall provide the ordering officer with an estimate of the total weight to be handled out prior to issuance of the service order for partial removal. The Contractor shall furnish to the ordering officer a new or revised warehouse receipt and/or combination inventory warehouse receipt, original and one copy, listing only those items remaining in storage, conforming with the provisions of C-7.

H-4 CHARGES

a. Charges under initial service orders and all supplemental orders shall be computed at the rates set forth in the Schedule of Services and Rates for Personal Property (Section B) in effect on the date services are ordered under the initial service order.

b. Monthly storage charges shall be payable in accordance with the rates set forth in the Schedule of Services and Rates for Personal Property (Section B) and computations set forth below:

(1) Storage charges are payable for a calendar month, except one-half month's storage charge shall be paid on lots received for storage on or after the 16th day of a month and lots released from storage on or before the 15th day of a month.

(2) In the event a partial removal of a lot is made or destruction or loss occurs on or before the 15th day of a month, the Contractor shall be paid one-half month's storage for the beginning weight and one-half month's storage for the remaining weight for that month. If the partial removal is made, or destruction or loss occurs, on or after the 16th day of the month, the Contractor shall be paid a full month storage for the weight recorded at the beginning of the month. Charges for the succeeding month(s) shall be computed on the weight remaining in storage. (Handling-out and handling-in charges, per Paragraph H-4, shall be in addition to the storage charges.)

c. Charges for items described in the Schedule of Services and Rates for Personal Property (Section B) shall be computed on the basis of the net weight of the lot including necessary cartons, packaging, packaging materials, crates for mirrors, pictures, table tops, etc., but

excluding the weight of any blocking, bracing, dunnage, pallets, pallet boxes, and other containers.

d. All items of service ordered shall be subject to and payable on the basis of a minimum weight of 500 pounds net.

e. Where partial removal of a lot is less than 100 pounds, no adjustment will be made in the remaining storage weight.

f. The Government shall not be liable for storage or service charges in connection with that portion of a lot that is in excess of weight limitations imposed by law or regulation or in connection with lots remaining in storage after the expiration of the period of entitlement of a member/employee to storage at Government expense.

g. The Contractor shall provide such special handling and additional protection as the member/employee may request. However, the charge therefore shall be a matter of independent agreement with the member/employee, and the Government shall not be liable therefore.

H-5 COMPENSATION

a. The Government reserves the right to award the contract for transportation of any lot of personal property stored with a Contractor to any carrier the Government may select. The Contractor shall promptly, and in accordance with the direction of the ordering officer, make lots available to the receiving carrier on a properly protected loading area of the Contractor in a condition satisfactory to be received by such carrier. The Contractor shall permit any such carrier to inventory and load property from its facility without any charge to the receiving carrier or the Government and will acknowledge the receiving carrier's notation of damage or shortage by signing the receiving carrier's exception sheet or rider, noting the damages and/or shortages, or by allowing the receiving carrier's agent to note damages and/or shortages on the Contractor's inventory form. The Contractor is obligated to repack, at no cost to the Government, any carton refused by the carrier due to improper packing that has been verified by the ordering officer, or their representative.

b. In the event the carrier does not pick up the lot on the specified date, between the hours of 0800 and 1700, the Contractor shall notify the ordering officer and continue to store, protect and be responsible for the property. Compensation will be made for restoring the shipment, upon approval of the ordering officer. The DD Form 1164 will be amended and/or reissued to authorize the additional cost and document the carrier failure as the cause of the additional cost. The Personal Property Shipping Officer will initiate set-off action against the carrier on the Government Bill of Lading through the Service finance center for the extra charges attributed to the carrier for not picking up the storage lot as scheduled. In the event a storage Contractor fails to prepare a lot (either partial or full) for pickup by the linehaul carrier on the agreed date, the ordering officer will advise the Contracting Officer. The Contracting Officer will initiate set-off action against the Contractor for the extra charges attributed to the Contractor for not preparing the storage lot as ordered.

c. When it is desired to remove all or part of a lot from the Contractor's warehouse, the Contractor may be unable to deliver some items to the carrier because of inability to locate them.

In the event that the Contractor subsequently finds these items in the warehouse, the Contractor shall be responsible for all shipping charges (in excess of what it would have cost the Government had the item(s) moved with the main lot) from the storage facility to the base, installation or home address where the member/employee is located. In the event the wrong lot or items are shipped/delivered, the Contractor will be responsible for shipping costs of returning the erroneous lot or items and delivering the correct lot or items. Compensation to the Contractor will not be over and above what it would have originally cost had the correct lot or items been delivered.

d. When the Contractor attempts pickup at residence on the date specified on the DD Form 1164, and the member/employee or member's/employee's representative is not available at the residence, the Contractor, upon approval of the ordering officer, shall be paid the drayage rate (Item III, Schedule of Services and Rates for Personal Property (Section B)) on a 500 pound shipment (minimum weight).

e. When the Contractor attempts delivery at the residence on the date specified on the DD Form 1164, and the member/employee is unable to accept the shipment at the residence, and the Contractor returns the shipment to his/her warehouse, the Contractor, upon approval of the ordering officer, shall be paid the handling and delivery rate (Item IV and Item VII, Schedule of Services and Rates for Personal Property (Section B)) on the actual weight.

f. When ordered on the DD Form 1164, the Contractor will prepare an inventory for high/extraordinary value items and such "special services" shall be payable according to the rates set forth in the Schedule of Services and Rates for Personal Property (Section B). The ordering officer must annotate the requested special services on the DD Form 1164.

H-6 LIABILITY FOR CARE OF PROPERTY

a. Except as hereafter provided, and notwithstanding payment for storage and other services, the Contractor shall be liable in an amount not exceeding $1.25 times the net weight (in pounds) of the shipment for any loss or damage to personal property caused by the failure to exercise the care of a reasonably prudent owner of similar property. The Contractor shall not be liable for any loss or damage to the personal property that is caused by acts or conditions beyond its control and without fault or negligence. The Contractor shall not be liable for loss or damage to any documents, evidence of debt, money, records, specie, jewelry, accounts, bills, currency, deeds, notes, stamps, securities, common carrier or other tickets, passports or letters of credit not specifically listed on the warehouse receipt and shall be under no obligation to accept the same for storage; however, if such property is accepted and listed on a warehouse receipt, the Contractor shall be liable for such property in the same manner as it is liable for personal property.

b. The Contractor shall inform the member/employee of the their right to declare, in writing, a value of any article or package of personal property in excess of $1.25 per pound times the net weight of the shipment.

c. The Contractor shall make prompt settlement directly to the member/employee or the Government on any claim for loss or damage to personal property for which there is liability

under the provisions of this Agreement. Contractors receiving a written claim for loss or damage to property stored by it shall acknowledge receipt of such claim, in writing, to the claimant (either the member/employee or the Government) within 10 working days after its receipt by the Contractor. The Contractor shall, at the time such claim is received, cause the date of receipt to be recorded on the claim. Every Contractor that receives a claim for loss or damage to personal property stored by it shall pay, decline, or make a firm compromise settlement offer, in writing, to the claimant within 120 days after receipt of the claim by the Contractor. However, if the claim is not settled within the 120- day period, the Contractor will at that time and at the expiration of each succeeding 30-day period while the claim remains pending, advise the claimant in writing of the status of the claim and the reasons for delay in making final disposition. The Contractor will request an extension from the claimant in writing. If the Government is the claimant, the Contractor understands that the Government claims office can proceed to collect the claim by administrative offset if it is not settled within 120 days of receipt or within an agreed extension time.

d. In the event the Contractor stores personal property in a facility that has not been approved by the Contracting Officer, the Contractor shall be absolutely liable for all loss or damage to the property, without regard to cause. The Contractor will be responsible for all costs associated with the movement of the storage lots to an approved warehouse.

H-7 ANNUAL DOCUMENTATION REQUIREMENT

The Contractor shall furnish all required documentation listed in Attachment 6 prior to the date indicated.

H-8 POSSESSION OF THIS AGREEMENT

The Contractor shall possess a copy of this Agreement, including modifications, which will be readily available for Department of Defense inspectors. The Contractor is responsible for ensuring that his/her employees are familiar with the provisions (with modifications) of this Agreement.

H-9 SUBCONTRACTING

The Contractor shall not subcontract with other persons or firms for the performance of any service ordered under this Agreement unless prior written approval has been received from the Contracting Officer.

H-10 REPORTING PROCEDURES FOR LOSS AND DAMAGE

a. Upon delivery of the personal property, it is the responsibility of the Contractor to provide the member/employee with three copies of DD Form1840, Joint Statement of Loss or Damage at Delivery, (Attachment 7), and DD Form 1840R, Notice of Loss or Damage (Attachment 8) and to obtain a receipt therefor in the space provided on the DD Form 1840. The Contractor shall also provide a copy of the completed DD Form 1840 to the ordering officer within 30 days of the date of delivery of personal property to the member/employee. Jointly with the member/employee, loss of or damage to the personal property shall be noted at the time of delivery on the DD Form 1840. For later discovered loss or damage, including that involving

packed items for which unpacking has been waived in writing, written documentation on DD Form 1840R advising the Contractor of later discovered loss or damage, dispatched not later than 75 days following delivery, shall be accepted by the Contractor as overcoming the presumption of the correctness of the delivery receipt.

b. The Contractor's failure to provide DD Form 1840 and 1840R and to have proof thereof will eliminate any requirement for notification to the Contractor. Written notice using DD Forms 1840 and 1840R is not required by the Contractor in case of major incidents described by provision C-7 d, which requires the Contractor to notify the Contracting Officer and ordering officers of the details of fires, vandalism, and similar incidents which produce significant loss, damage, or delay.

c. Loss of or damage to personal property discovered more than 75 days after the date of delivery will be presumed not to have occurred while the property was in possession of the Contractor unless good cause for the delay is shown, such as the officially recognized absence or hospitalization of the member/employee during all or a portion of the period of 75 days from the date of delivery.

d. The Contractor will be deemed to have waived the right to inspect if:

(1) Exceptions were taken at time of delivery and the Contractor fails to inspect within 75 days from the date of delivery; or if:

(2) Written documentation of loss or damage has been dispatched within 75 days from the date of delivery and the Contractor fails to inspect within 45 days from the date of such dispatch or 75 days from the date of delivery, whichever is later.

e. No claim shall be denied due solely to the Contractor's lack of opportunity to inspect prior to repair when the nature of the damaged item, such as a refrigerator, washer, dryer, or television, required immediate repair.

f. The 120-day period within which Contractors must settle a claim for loss or damage does not commence until receipt of a formal claim.

g. It is agreed that the claim will be limited to the items indicated on the DD Forms 1840 and 1840R, except as indicated above. The claim for loss and/or damage shall not be limited to the general description of loss or damage to those items noted on DD Forms 1840 and 1840R.

H-11 ORDERING OFFICERS' CONTRACT REPORTING RESPONSIBILITIES

All service orders issued and accepted against this Agreement shall be reported into the Federal Procurement Data System. The ordering officer shall provide the necessary information to the local contracting office responsible for the ordering officer's appointment. Reporting requirements shall be in accordance with DFARS 204.670-2, Reportable contracting actions.

H-12 STANDARD INDUSTRIAL CLASSIFICATION (SIC) CODE AND SMALL BUSINESS SIZE STANDARD (FAR 52.219-22) DELETED (See Paragraph K-7)

H-13 NOTICE - FACSIMILE DOCUMENTS

Policy on acceptability of documents transmitted by a facsimile machine in relation to this Agreement. No facsimile of the following documents will be accepted. Original signatures of authorized representatives of your company or original signature certifications are required.

a. Rate change requests (Reference: Paragraph H-1 a).

b. Insurance certificates (Reference: Paragraph C-7 h.).

c. Financial statements (Reference: Annual Review Requirements, Attachment 6).

d. Signature pages (Ref: Section A, Pages 1 and 2).

Facsimiles will be accepted for Freedom of Information Act requests but will not be answered by facsimile. Other documents under the Agreement will be accepted by the Contracting Officer on a case-by-case basis.

PART II - SECTION I - CONTRACT CLAUSES

I-1 WAGE RATE DETERMINATION (Subparagraphs are applicable if block has an “x”)

( ) a. Wage rate determination applicable to this Agreement.

( ) b. Service Contract Act (SCA) Minimum Wages and Fringe Benefits FAR 52.222-47 (May 1989)

An SCA wage determination applicable to this work has been requested from the US Department of Labor. If an SCA wage determination is not incorporated herein, the bidders/offerors shall consider the economic terms of the collective bargaining agreement (CBA) between the incumbent Contractor_____and the _____(union). If the economic terms of the collective bargaining agreement or the collective bargaining agreement itself is not attached to the solicitation, copies can be obtained from the Contracting Officer. Pursuant to Department of Labor Regulation, 29 CFR 4.1b and Paragraph (g) of the clause at 52.222-41, Service Contract Act of 1965, as amended, the economic terms of that Agreement will apply to the contract resulting from this solicitation, notwithstanding the absence of a wage determination reflecting such terms, unless it is determined that the Agreement was not the result of arm's length negotiations or that after a hearing pursuant to section 4(c) of the Act, the economic terms of the Agreement are substantially at variance with the wages prevailing in the area.

I-2 FAR 52.243-1 CHANGES - FIXED-PRICE, ALTERNATE I (April 1984)

a. The Contracting Officer may at any time, by written order, and without notice to the sureties, if any, make changes within the general scope of this Agreement in any one or more of the following:

(1) Description of services to be performed.

(2) Time of performance (i.e., hours of the day, days of the week, etc.).

(3) Place of performance of the services.

b. If any such change causes an increase or decrease in the cost of, or the time required for, performance of any part of the work under this Agreement, whether or not changed by the order, the Contracting Officer shall make an equitable adjustment in the Agreement price, the delivery schedule, or both, and shall modify the Agreement.

c. The Contractor must assert its right to an adjustment under this Agreement within 30 days from the date of receipt of the written order. However, if the Contracting Officer decides that the facts justify it, the Contracting Officer may receive and act upon a proposal submitted before final payment of the Agreement.

d. If the Contractor’s proposal includes the cost of property made obsolete or excess by the change, the Contracting Officer shall have the right to prescribe the manner of the disposition of the property.

e. Failure to agree to any adjustment shall be a dispute under the Disputes clause. However, nothing in this clause shall excuse the Contractor from proceeding with the contract as changed.

I-3 FAR 52.215-8 ORDER OF PRECEDENCE—UNIFORM CONTRACT FORMAT (October 1997)

Any inconsistency in this solicitation or contract shall be resolved by giving precedence in the following order:

a. The Schedule (excluding the specifications).

b. Representations and other instructions.

c. Contract clauses.

d. Other documents, exhibits, and attachments.

e. The specifications.

I-4 FAR 52.252-2 CLAUSES INCORPORATED BY REFERENCE (February 1998)

This contract incorporates one or more clauses by reference with the same force and effect as if they were given in full text. Upon request, the Contracting Officer will make their full text available. Also, the full text of a clause may be accessed electronically at this/these address(es):

Federal Acquisition Regulation Clauses: http://www.arnet.gov/far/

Defense Federal Acquisition Regulation Supplement Clauses:
http://farsite.hill.af.mil/VFDFARa.htm

FEDERAL ACQUISITION REGULATION CLAUSES (48 CFR CHAPTER 1)

	NUMBER	TITLE	DATE
I-5	52.202.1	Definitions	(May 2001)
I-6	52.203-3	Gratuities	(April 1984)
I-7	52-203-5	Covenant Against Contingent Fees	(April 1984
I-8	52.203-7	Anti-Kickback Procedures	(July 1995)
I-9	52.215-2	Audit and Records - Negotiation	(June 1999)
I-10	52.219-4	Notice of Price Evaluation Preference for HUBZone Small Business Concerns	(January 1999)
I-11	52.219-8	Utilization of Small Business Concerns	(October 2000)
I-12	52.222-3	Convict Labor	(August 1996)
I-13	52.222-4	Contract Work Hours and Safety Standards Act – Overtime Compensation	(September 2000)
I-14	52.222-12	Contract Termination-Debarment	(February 1988)
I-15	52.222-14	Disputes Concerning Labor Standards	(February 1988)

	NUMBER	TITLE	DATE
I-16	52.222-35	Affirmative Action for Disabled Veterans and Veterans of the Vietnam Era	(April 1998)
I-17	52.222-36	Affirmative Action for Workers with Disabilities	(June 1998)
I-18	52.222-37	Employment Reports on Disabled Veterans and Veterans of the Vietnam Era	(January 1999)
I-19	52.222-41	Service Contract Act of 1965, as amended	(May 1989)
I-20	52.222-42	Statement of Equivalent Rates of Federal Hires	(May 1989)
I-21	52.223-6	Drug-Free Workplace	(May 2001)
I-22	52.224-1	Privacy Act Notification	(April 1984)
I-23	52.224-2	Privacy Act	(April 1984)
I-24	52.229-3	Federal, State, and Local Taxes	(January 1991)
I-25	52.229-5	Taxes - Contracts Performed in US Possessions or Puerto Rico	(April 1984)
I-26	52.232-1	Payments	(April 1984)
I-27	52-232-8	Discounts for Prompt Payment	(May 1997)
I-28	52.232-17	Interest	(June 1996)
I-29	52.232-23	Assignment of Claims	(January 1986)
I-30	52.232-25	Prompt Payment	(May 2001)
I-31	52.233-1	Disputes	(December 1998)
I-32	52.233-3	Protest After Award	(August 1996)
I-33	52.237-2	Protection of Government Buildings, Equipment and Vegetation	(April 1984)
I-34	52.246-4	Inspection of Services - Fixed Price	(August 1996)
I-35	52.247-12	Supervision, Labor or Material	(April 1984)
I-36	52.247-17	Charges	(April 1984)
I-37	52.247-28	Contractor’s Invoices	(April 1984)
I-38	52.249-4	Termination for Convenience of the Government (Services) (Short Form)	(April 1984)
I-39	52.249-8	Default (Fixed-Price Supply and Service) Alternative I	(April 1984)

DEFENSE FAR SUPPLEMENT CLAUSES (48 CFR CHAPTER 2)

	NUMBER	TITLE	DATE
I-40	252.232-7000	Advance Payment Pool	(December 1991)
I-41	252.225-7001	Buy American Act and Balance of Payments Program	(March 1998)

PART III - SECTION J - LIST OF DOCUMENTS, EXHIBITS & OTHER ATTACHMENTS

	PAGE
1. Certificate of Independent Price Determination (APR 1985) FAR 52.203-2, Attachment 1	J-56
2. Service Order for Personal Property (DD Form 1164), Attachment 2	J-58
3. Certificate of Insurance Warehousemen's Legal Liability , Attachment 3	J-59
4. Household Goods Descriptive Inventory, Attachment 4	J-60
5. Locator Sheet, Attachment 5	J-61
6. Annual Review Requirements, Attachment 6	J-62
7. Joint Statement of Loss or Damage at Delivery (DD Form 1840), Attachment 7	J-63
8. Notice of Loss or Damage (DD Form 1840R), Attachment 8	J-64
9. Private Vehicle Shipping Document for Motorcycle (DD Form 788-2), Attachment 9	J-65

PART IV - SECTION K - REPRESENTATIONS, CERTIFICATIONS, & OTHER STATEMENTS OF OFFEROR

K-1 FAR 52.203-2 CERTIFICATE OF INDEPENDENT PRICE DETERMINATION (April 1985)

a. The offeror certifies that-

(1) The prices in this offer have been arrived at independently, without, for the purpose of restricting competition, any consultation, communication, or agreement with any other offeror or competitor relating to (i) those prices, (ii) the intention to submit an offer, or (iii) the methods or factors used to calculate the prices offered;

(2) The prices in this offer have not been and will not be knowingly disclosed by the offeror, directly or indirectly, to any other offeror or competitor before bid opening (in the case of a sealed bid solicitation) or contract award (in the case of a negotiated solicitation) unless otherwise required by law; and

(3) No attempt has been made or will be made by the offeror to induce any other concern to submit or not to submit an offer for the purpose of restricting competition.

b. Each signature on the offer is considered to be a certification by the signatory that the signatory-

(1) Is the person in the offeror's organization responsible for determining the prices being offered in this bid or proposal, and that the signatory has not participated and will not participate in any action contrary to Subparagraphs (a)(1) through (a)(3) of this provision; or

(2) (i) Has been authorized, in writing, to act as agent for the following principals in certifying that those principals have not participated, and will not participate in any action contrary to Subparagraphs (a)(1) through (a)(3) of this provision,

_____

_____

(Insert full name of person(s) in the offeror's organization responsible for determining the prices offered in this bid or proposal, and the title of his/her position in the offeror's organization)

(ii) As an authorized agent, does certify that the principals named in subdivision (b)(2)(i) of this provision have not participated, and will not participate, in any action contrary to Subparagraphs (a)(1) through (a)(3) of this provision; and

(iii) As an agent, has not personally participated, and will not participate, in any action contrary to Subparagraphs (a)(1) through (a)(3) of this provision.

c. If the offeror deletes or modifies Subparagraph (a)(2) of this provision, the offeror must furnish with its offer a signed statement setting forth in detail the circumstances of the disclosure.

K-2 FAR 52.203-4 CONTINGENT FEE REPRESENTATION AND AGREEMENT (APR 1984) RESERVED

K-3 FAR 52.204-3 TAXPAYER IDENTIFICATION (October 1998)

(a) Definitions.

"Common parent," as used in this provision, means that corporate entity that owns or controls an affiliated group of corporations that files its Federal income tax returns on a consolidated basis, and of which the offeror is a member.

"Taxpayer Identification Number (TIN)," as used in this provision, means the number required by the Internal Revenue Service (IRS) to be used by the offeror in reporting income tax and other returns. The TIN may be either a Social Security Number or an Employer Identification Number.

(b) All offerors must submit the information required in Paragraphs (d) through (f) of this provision to comply with debt collection requirements of 31 U.S.C. § 7701(c), Taxpayer Identifying Number and § 3325(d), Vouchers reporting requirements of 26 U.S.C. § 6041, Information at Source, § 6041A, Returns Regarding Payments of Remuneration for Services and Direct Sales, and § 6050M, Returns Relating to Persons Receiving Contracts from Federal Executive Agencies and implementing regulations issued by the IRS. If the resulting contract is subject to the payment reporting requirements described in Federal Acquisition Regulation (FAR) 4.904, the failure or refusal by the offeror to furnish the information may result in a 31 percent reduction of payments otherwise due under the contract.

(c) The TIN may be used by the Government to collect and report on any delinquent amounts arising out of the offeror's relationship with the Government (31 U.S.C. 7701(c)(3)). If the resulting contract is subject to the payment reporting requirements described in FAR 4.904, the TIN provided hereunder may be matched with IRS records to verify the accuracy of the offeror's TIN.

(d) Taxpayer Identification Number (TIN).

[ ] TIN: _____.

[ ] TIN has been applied for.

[ ] TIN is not required because:

[ ] Offeror is a nonresident alien, foreign corporation, or foreign partnership that does not have income effectively connected with the conduct of a trade or business in the United States and does not have an office or place of business or a fiscal paying agent in the United States;

[ ] Offeror is an agency or instrumentality of a foreign Government;

[ ] Offeror is an agency or instrumentality of the Federal Government.

(e) Type of organization.

[ ] Sole proprietorship;

[ ] Partnership;

[ ] Corporate entity (not tax-exempt);

[ ] Corporate entity (tax-exempt);

[ ] Government entity (Federal, State, or local);

[ ] Foreign Government;

[ ] International organization per 26 CFR 1.6049-4;

[ ] Other _____.

(f) Common parent.

[ ] Offeror is not owned or controlled by a common parent as defined in Paragraph (a) of this provision.

[ ] Name and TIN of common parent:

Name _____

TIN _____

K-4 FAR 52.209-5 CERTIFICATION REGARDING DEBARMENT, SUSPENSION, PROPOSED DEBARMENT, AND OTHER RESPONSIBILITY MATTERS (January 2001)

Certification Regarding Debarment, Suspension, Proposed Debarment, and Other Responsibility Matters (Jan 2001) [This date stayed indefinitely. Please use the provision date below.]

Certification Regarding Debarment, Suspension, Proposed Debarment, and Other Responsibility Matters (Apr 2001)

(a)

(1) The Offeror certifies, to the best of its knowledge and belief, that--

(i) The Offeror and/or any of its Principals--

(A) Are [ ] are not [ ] presently debarred, suspended, proposed for debarment, or declared ineligible for the award of contracts by any Federal agency;

(B) Have [ ] have not [ ], within the three-year period preceding this offer, been convicted of or had a civil judgment rendered against them for: commission of fraud or a criminal offense in connection with obtaining, attempting to obtain, or performing a public (Federal, state, or local) contract or subcontract; violation of Federal or state antitrust statutes relating to the submission of offers; or commission of embezzlement, theft, forgery, bribery, falsification or destruction of records, making false statements, tax evasion, or receiving stolen property; [This language stayed indefinitely. Please use Paragraph (a)(1)(i)(D) below.]

(C) Are [ ] are not [ ] presently indicted for, or otherwise criminally or civilly charged by a Governmental entity with, commission of any of the offenses enumerated in Paragraph (a)(1)(i)(B) of this provision; and [This language stayed indefinitely. Please use Paragraph (a)(1)(i)(E) below.]

(D) Have [ ] have not [ ], within a three-year period preceding this offer, been convicted of or had a civil judgment rendered against them for: commission of fraud or a criminal offense in connection with obtaining, attempting to obtain, or performing a public (Federal, state, or local) contract or subcontract; violation of Federal or state antitrust statutes relating to the submission of offers; or commission of embezzlement, theft, forgery, bribery, falsification or destruction of records, making false statements, tax evasion, or receiving stolen property; and

(E) Are [ ] are not [ ] presently indicted for, or otherwise criminally or civilly charged by a Governmental entity with, commission of any of the offenses enumerated in subdivision (a)(1)(i)(D) of this provision.

(ii) (A) [This Paragraph (a)(1)(ii) is stayed indefinitely.] The offeror, aside from the offenses enumerated in Paragraphs (a)(1)(i)(A), (B), and (C) of this provision, has [ ] has not [ ] within the past three years, relative to tax, labor and employment, environmental, antitrust, or consumer protection laws--

(1) Been convicted of a Federal or State felony (or has any Federal or State felony indictments currently pending against them); or

(2) Had a Federal court judgment in a civil case brought by the United States rendered against them; or

(3) Had an adverse decision by a Federal administrative law judge, board, or commission indicating a willful violation of law.

(B) If the offeror has responded affirmatively, the offeror shall provide additional information if requested by the Contracting Officer; and

(iii) The Offeror has [ ] has not [ ] within a three-year period preceding this offer, had one or more contracts terminated for default by any Federal agency.

(2) “Principals,” for the purposes of this certification, means officers; directors; owners; partners; and, persons having primary management or supervisory responsibilities within a business entity

(e.g., general manager; plant manager; head of a subsidiary, division, or business segment, and similar positions).

This Certification Concerns a Matter Within the Jurisdiction of an Agency of the United States and the Making of a False, Fictitious, or Fraudulent Certification May Render the Maker Subject to Prosecution Under 18 U.S.C, §1001, Statements or Entries Generally.

(b) The Offeror shall provide immediate written notice to the Contracting Officer if, at any time prior to contract award, the Offeror learns that its certification was erroneous when submitted or has become erroneous by reason of changed circumstances.

(c) A certification that any of the items in Paragraph (a) of this provision exists will not necessarily result in withholding of an award under this solicitation. However, the certification will be considered in connection with a determination of the Offeror's responsibility. Failure of the Offeror to furnish a certification or provide such additional information as requested by the Contracting Officer may render the Offeror nonresponsible.

(d) Nothing contained in the foregoing shall be construed to require establishment of a system of records in order to render, in good faith, the certification required by Paragraph (a) of this provision. The knowledge and information of an Offeror is not required to exceed that which is normally possessed by a prudent person in the ordinary course of business dealings.

(e) The certification in Paragraph (a) of this provision is a material representation of fact upon which reliance was placed when making award. If it is later determined that the Offeror knowingly rendered an erroneous certification, in addition to other remedies available to the Government, the Contracting Officer may terminate the contract resulting from this solicitation for default.

K-5 FAR 52.215-6 TYPE OF BUSINESS ORGANIZATION (JUL 1987) DELETED

K-6 FAR 52.215-11 AUTHORIZED NEGOTIATORS (APR 1984) DELETED

K-7 FAR 52.219-1 SMALL BUSINESS PROGRAM REPRESENTATIONS (May 2001)

(a)

(1) The North American Industry Classification System (NAICS) code for this acquisition is _____ [insert NAICS code].

(2) The small business size standard is _____ [insert size standard].

(3) The small business size standard for a concern which submits an offer in its own name, other than on a construction or service contract, but which proposes to furnish a product which it did not itself manufacture, is 500 employees.

(b) Representations.

(1) The offeror represents as part of its offer that it [ ] is, [ ] is not a small business concern.

(2) [Complete only if the offeror represented itself as a small business concern in Paragraph (b)(1) of this provision.] The offeror represents, for general statistical purposes, that it [ ] is, [ ] is not, a small disadvantaged business concern as defined in 13 CFR 124.1002.

(3) [Complete only if the offeror represented itself as a small business concern in Paragraph (b)(1) of this provision.] The offeror represents as part of its offer that it [ ] is, [ ] is not a women-owned small business concern.

(4) [Complete only if the offeror represented itself as a small business concern in Paragraph (b)(1) of this provision.] The offeror represents as part of its offer that it [ ] is, [ ] is not a veteran-owned small business concern.

(5) [Complete only if the offeror represented itself as a veteran-owned small business concern in Paragraph (b)(4) of this provision.] The offeror represents as part of its offer that it [ ] is, [ ] is not a service-disabled veteran-owned small business concern.

(6) [Complete only if offeror represented itself as a small business concern in Paragraph (b)(1) of this provision.] The offeror represents, as part of its offer, that--

(i) It [ ] is, [ ] is not a HUBZone small business concern listed, on the date of this representation, on the List of Qualified HUBZone Small Business Concerns maintained by the Small Business Administration, and no material change in ownership and control, principal office of ownership, or HUBZone employee percentage has occurred since it was certified by the Small Business Administration in accordance with 13 CFR Part 126; and

(ii) It [ ] is, [ ] is not a joint venture that complies with the requirements of 13 CFR Part 126, and the representation in Paragraph (b)(6)(i) of this provision is accurate for the HUBZone small business concern or concerns that are participating in the joint venture. [The offeror shall enter the name or names of the HUBZone small business concern or concerns that are participating in the joint venture: _____.] Each HUBZone small business concern participating in the joint venture shall submit a separate signed copy of the HUBZone representation.

(7) [Complete if offeror represented itself as disadvantaged in Paragraph (b)(2) of this provision.] The offeror shall check the category in which its ownership falls:

_____Black American.

_____Hispanic American.

_____Native American (American Indians, Eskimos, Aleuts, or Native Hawaiians).

_____Asian-Pacific American (persons with origins from Burma, Thailand, Malaysia, Indonesia, Singapore, Brunei, Japan, China, Taiwan, Laos, Cambodia (Kampuchea), Vietnam, Korea, The Philippines, US Trust Territory of the Pacific Islands (Republic of Palau), Republic of the

Marshall Islands, Federated States of Micronesia, the Commonwealth of the Northern Mariana Islands, Guam, Samoa, Macao, Hong Kong, Fiji, Tonga, Kiribati, Tuvalu, or Nauru).

_____Subcontinent Asian (Asian-Indian) American (persons with origins from India, Pakistan, Bangladesh, Sri Lanka, Bhutan, the Maldives Islands, or Nepal).

_____Individual/concern, other than one of the preceding.

(c) Definitions. As used in this provision-- "Service-disabled veteran-owned small business concern"--

(1) Means a small business concern--

(i) Not less than 51 percent of which is owned by one or more service-disabled veterans or, in the case of any publicly owned business, not less than 51 percent of the stock of which is owned by one or more service-disabled veterans; and

(ii) The management and daily business operations of which are controlled by one or more service-disabled veterans or, in the case of a veteran with permanent and severe disability, the spouse or permanent caregiver of such veteran.

(2) Service-disabled veteran means a veteran, as defined in 38 U.S.C. § 101(2), Definitions, with a disability that is service-connected, as defined in 38 U.S.C. § 101(16), Definitions.

"Small business concern" means a concern, including its affiliates, that is independently owned and operated, not dominant in the field of operation in which it is bidding on Government contracts, and qualified as a small business under the criteria in 13 CFR part 121 and the size standard in Paragraph (a) of this provision.

"Veteran-owned small business concern" means a small business concern--

(1) Not less than 51 percent of which is owned by one or more veterans (as defined in 38 U.S.C. 101(2)) or, in the case of any publicly owned business, not less than 51 percent of the stock of which is owned by one or more veterans; and

(2) The management and daily business operations of which are controlled by one or more veterans.

"Women-owned small business concern" means a small business concern--

(1) Which is at least 51 percent owned by one or more women or, in the case of any publicly owned business, at least 51 percent of the stock of which is owned by one or more women; and

(2) Whose management and daily business operations are controlled by one or more women.

(d) Notice.

(1) If this solicitation is for supplies and has been set aside, in whole or in part, for small business concerns, then the clause in this solicitation providing notice of the set-aside contains restrictions on the source of the end items to be furnished.

(2) Under 15 U.S.C. § 645(d), Offenses and Penalties, any person who misrepresents a firm's status as a small, HUBZone small, small disadvantaged, or women-owned small business concern in order to obtain a contract to be awarded under the preference programs established pursuant to section 8(a), 8(d), 9, or 15 of the Small Business Act or any other provision of Federal law that specifically references section 8(d) for a definition of program eligibility, shall--

(i) Be punished by imposition of fine, imprisonment, or both;

(ii) Be subject to administrative remedies, including suspension and debarment; and

(iii) Be ineligible for participation in programs conducted under the authority of the Act.

K-8 FAR 52.219-2 SMALL DISADVANTAGED BUSINESS CONCERN REPRESENTATION (APR 1984) DELETED

K-9 FAR 52.219-3 WOMEN-OWNED SMALL BUSINESS REPRESENTATION (APR 1984) DELETED

K-10 FAR 52.222-21 PROHIBITION OF SEGREGATED FACILITIES (FEBRUARY 1999)

(a) “Segregated facilities,” as used in this clause, means any waiting rooms, work areas, rest rooms and wash rooms, restaurants and other eating areas, time clocks, locker rooms and other storage or dressing areas, parking lots, drinking fountains, recreation or entertainment areas, transportation, and housing facilities provided for employees, that are segregated by explicit directive or are in fact segregated on the basis of race, color, religion, sex, or national origin because of written or oral policies or employee custom. The term does not include separate or single-user rest rooms or necessary dressing or sleeping areas provided to assure privacy between the sexes.

(b) The Contractor agrees that it does not and will not maintain or provide for its employees any segregated facilities at any of its establishments, and that it does not and will not permit its employees to perform their services at any location under its control where segregated facilities are maintained. The Contractor agrees that a breach of this clause is a violation of the Equal Opportunity clause in this contract.

(c) The Contractor shall include this clause in every subcontract and purchase order that is subject to the Equal Opportunity clause of this contract.

K-11 FAR 52.222-22 PREVIOUS CONTRACTS AND COMPLIANCE REPORTS (FEBRUARY 1999)

The offeror represents that--

a. It [ ] has, [ ] has not participated in a previous contract or subcontract subject to the Equal Opportunity clause of this solicitation;

b. It [ ] has, [ ] has not, filed all required compliance reports; and

c. Representations indicating submission of required compliance reports, signed by proposed subcontractors, will be obtained before subcontract awards.

K-12 FAR 52.222-25 AFFIRMATIVE ACTION COMPLIANCE (APRIL 1984)

The offeror represents that

(a) it [ ] has developed and has on file, [ ] has not developed and does not have on file, at each establishment, affirmative action programs required by the rules and regulations of the Secretary of Labor (41 CFR 60-1 and 60-2), or

(b) it has not [ ] previously had contracts subject to the written affirmative action programs requirement of the rules and regulations of the Secretary of Labor.

K-13 52.222-26 EQUAL OPPORTUNITY (FEBRUARY 1999)

Notice: The following terms of this clause are waived for this contract:

_____ [Contracting Officer shall list terms].

(a) If, during any 12-month period (including the 12 months preceding the award of this contract), the Contractor has been or is awarded nonexempt Federal contracts and/or subcontracts that have an aggregate value in excess of $10,000, the Contractor shall comply with Subparagraphs (b)(1) through (11) of this clause. Upon request, the Contractor shall provide information necessary to determine the applicability of this clause.

(b) During performance of this contract, the Contractor agrees as follows:

(1) The Contractor shall not discriminate against any employee or applicant for employment because of race, color, religion, sex, or national origin. However, it shall not be a violation of this clause for the Contractor to extend a publicly announced preference in employment to Indians living on or near an Indian reservation, in connection with employment opportunities on or near an Indian reservation, as permitted by 41 CFR 60-1.5.

(2) The Contractor shall take affirmative action to ensure that applicants are employed, and that employees are treated during employment, without regard to their race, color, religion, sex, or national origin. This shall include, but not be limited to, (i) employment, (ii) upgrading, (iii) demotion, (iv) transfer, (v) recruitment or recruitment advertising, (vi) layoff or termination, (vii) rates of pay or other forms of compensation, and (viii) selection for training, including apprenticeship.

(3) The Contractor shall post in conspicuous places available to employees and applicants for employment the notices to be provided by the Contracting Officer that explain this clause.

(4) The Contractor shall, in all solicitations or advertisements for employees placed by or on behalf of the Contractor, state that all qualified applicants will receive consideration for employment without regard to race, color, religion, sex, or national origin.

(5) The Contractor shall send, to each labor union or representative of workers with which it has a collective bargaining agreement or other contract or understanding, the notice to be provided by the Contracting Officer advising the labor union or workers' representative of the Contractor's commitments under this clause, and post copies of the notice in conspicuous places available to employees and applicants for employment.

(6) The Contractor shall comply with Executive Order 11246, as amended, and the rules, regulations, and orders of the Secretary of Labor.

(7) The Contractor shall furnish to the contracting agency all information required by Executive Order 11246, as amended, and by the rules, regulations, and orders of the Secretary of Labor. The Contractor shall also file Standard Form 100 (EEO-1), or any successor form, as prescribed in 41 CFR part 60-1. Unless the Contractor has filed within the 12 months preceding the date of contract award, the Contractor shall, within 30 days after contract award, apply to either the regional Office of Federal Contract Compliance Programs (OFCCP) or the local office of the Equal Employment Opportunity Commission for the necessary forms.

(8) The Contractor shall permit access to its premises, during normal business hours, by the contracting agency or the OFCCP for the purpose of conducting on-site compliance evaluations and complaint investigations. The Contractor shall permit the Government to inspect and copy any books, accounts, records (including computerized records), and other material that may be relevant to the matter under investigation and pertinent to compliance with Executive Order 11246, as amended, and rules and regulations that implement the Executive Order.

(9) If the OFCCP determines that the Contractor is not in compliance with this clause or any rule, regulation, or order of the Secretary of Labor, this contract may be canceled, terminated, or suspended in whole or in part and the Contractor may be declared ineligible for further Government contracts, under the procedures authorized in Executive Order 11246, as amended. In addition, sanctions may be imposed and remedies invoked against the Contractor as provided in Executive Order 11246, as amended, the rules, regulations, and orders of the Secretary of Labor, or as otherwise provided by law.

(10) The Contractor shall include the terms and conditions of Subparagraph (b) (1) through (11) of this clause in every subcontract or purchase order that is not exempted by the rules, regulations, or orders of the Secretary of Labor issued under Executive Order 11246, as amended, so that these terms and conditions will be binding upon each subcontractor or vendor.

(11) The Contractor shall take such action with respect to any subcontract or purchase order as the Contracting Officer may direct as a means of enforcing these terms and conditions, including sanctions for noncompliance; provided, that if the Contractor becomes involved in, or

is threatened with, litigation with a subcontractor or vendor as a result of any direction, the Contractor may request the United States to enter into the litigation to protect the interests of the United States.

(c) Notwithstanding any other clauses in this contract, disputes relative to this clause will be governed by the procedures in 41 CFR 60-1.1.

K-14 FAR 52.223-1 CLEAN AIR AND WATER CERTIFICATION (APR 1984) DELETED

K-15 FAR 52.223-5 CERTIFICATION REGARDING A DRUG-FREE WORKPLACE (JUL 1990) DELETED

K-16 FAR 52.232-11 EXTRAS (APR 1984)

Except as otherwise provided in this contract, no payment for extras shall be made unless the Contracting Officer has authorized such extras and the price in writing.

Attachment 1

Certificate of Independent Price Determination (Apr 1985)
FAR 52.203-2

The rates submitted herewith in the Schedule of Services and Rates for Personal Property, Basic Ordering Agreement Number_____, Modification Number_____, have been arrived at by_____, independently and without collusion with any other Contractor. (Name of Company)

a. The offeror certifies that

(1) The prices in this offer have been arrived at independently, without, for the purpose of restricting competition, any consultation, communication, or agreement with any other offeror or competitor relating to

(i) those prices,

(ii) the intention to submit an offer, or

(iii) the methods or factors used to calculate the prices offered;

(2) The prices in this offer have not been and will not be knowingly disclosed by the offeror, directly or indirectly, to any other offeror or competitor before bid opening (in the case of a sealed bid solicitation) or contract award (in the case of negotiated solicitation) unless otherwise required by law; and

(3) No attempt has been made or will be made by the offeror to induce any other concern to submit an offer for the purpose of restricting competition.

b. Each signature on the offer is considered to be a certification by the signatory that the signatory -

(1) Is the person in the offeror's organization responsible for determining the prices being offered in this bid or proposal, and that the signatory has not participated and will not participate in any action contrary to Subparagraphs a (1) through a (3) of this provision, or

(2)

(i) Has been authorized, in writing, to act as agent for the following principals in certifying that those principals have not participated, and will not participate in any action contrary to Subparagraphs a (1) through a (3) of this provision.

_____

_____

(insert full name of person(s) in the offeror's organization responsible for determining the prices offered in this bid or proposal, and the title of his/her position in the offeror's organization);

(ii) As an authorized agent, does certify that the principals named in subdivision b (2)(i) above have not participated, and will not participate, in any action contrary to Subparagraphs a (1) through a (3) of this provision; and

(iii) As an agent, has not personally participated, and will not participate, in any action contrary to Subparagraphs a (1) through a (3) of this provision.

c. If the offeror deletes or modifies Subparagraph a (2) above, the offeror must furnish with its offer a signed statement setting forth in detail the circumstances of the disclosure.

Name of Company

Date:_____ By:_____

(Title)

_____

(Signature of person who formulated the rates)

_____

(Signature of person who signed the Basic Ordering Agreement or the Modification submitted herewith.)

Given under my hand and seal of office this _____ day of _____ 19____.

_____

(Notary Signature)

Notary Public in and for _____

_____

(City & County)

_____

(State)

Attachment 2

Service Order for Personal Property (DD Form 1164)

SERVICE ORDER FOR PERSONAL PROPERTY

1. TO *(Contractor)*	2. FROM *(Ordering Office)*
a. NAME	a. NAME
b. ADDRESS *(Street, City, State, ZIP Code)*	b. ADDRESS *(Street, City, State, ZIP Code)*

3. THIS SERVICE ORDER IS ISSUED AND AN ORDER IS HEREBY PLACED WITH YOU, ACCEPTING YOUR OFFER (ORAL OR WRITTEN) FOR SERVICES ON *(enter date)* _____ , _____ , SUBJECT TO THE PROVISIONS OF THE BELOW-NUMBERED BASIC ORDERING AGREEMENT FOR THE FOLLOWING SERVICES:

a. SCAC CODE	b. FEDERAL AGENCY	c. APPROPRIATION IDENTITY	d. BASIC ORDERING AGREEMENT NUMBER	e. MODIFICATION NUMBER

f. SERVICE ORDER NUMBER	g. LOT NUMBER	h. LOCATION OF PROPERTY *(Street, City, State, ZIP Code)*
(1) OLD		
(2) NEW		

i. ESTIMATED STORAGE PERIOD	j. PICK-UP DATE *(YYYYMMDD)*	k. STORAGE EXPIRATION DATE *(YYYYMMDD)*	l. ESTIMATED WEIGHT	m. WEIGHT IN STORAGE *(ACTUAL)*

n. OWNER

(1) NAME *(Last, First, Middle Initial)*	(2) PERMANENT ADDRESS *(Street, City, State, ZIP Code)*
(3) PAY GRADE / (4) SSN	

4. NEW ACCOUNTS - SERVICES ORDERED

a. PACKING ITEM I	b. SPECIAL SERVICES (1) WARDROBE - ITEM IIA		(2) EXPENSIVE/VALUABLE ITEM - ITEM IIB		c. DRAYAGE-IN ITEM III		d. HANDLING-IN ITEM IV	e. STORAGE ITEM V
RATE	NO.	RATE	NO.	RATE	ZONE	RATE	RATE	RATE
$		$		$		$	$	$

5. REMOVAL ACTIONS

a. APPROPRIATION IDENTITY	b. STORAGE REMOVAL DATE *(YYYYMMDD)*	c. DELIVERY ADDRESS *(Street, City, State, ZIP Code)*

d. SERVICES ORDERED

(1) HANDLING IN ITEM IV	(2) HANDLING OUT ITEM VI	(3) DRAYAGE-OUT ITEM VII		(4) UNPACKING ITEM VIII	(5) WEIGHT REHANDLED	(5) WEIGHT REMOVED	(5) WEIGHT REMAINING
RATE	RATE	ZONE	RATE	RATE			
$	$		$	$			

6. REMARKS

7. SPECIAL INSTRUCTIONS

a. MAIL INVOICES TO:

b. STORAGE AUTHORITY:

c. MAXIMUM WEIGHT CHARGEABLE TO GOVERNMENT LBS. Weight in excess of such maximum will be charged to the owner.

d. ESTIMATED COST OF THE SERVICES IS $. You are not to perform any service which will result in contract costs in excess of the above sum, unless authorized in writing by the ordering officer.

e. ACCOUNTING CLASSIFICATION:

8. CERTIFICATION *(To be completed by Ordering Office)*
Commercial storage has been determined to be more economical than government storage.

a. TYPED NAME *(Last, First, Middle Initial)*	b. TITLE	c. SIGNATURE	d. DATE SIGNED *(YYYYMMDD)*

DD FORM 1164, SEP 1998 (EG) PREVIOUS EDITION IS OBSOLETE. COPY DESIGNATION: ☐ Original ☐ 2 ☐ 3 (X) ☐ 4 ☐ 5 ☐ 6 ☐ 7

Designed using Perform Pro, WHS/DIOR, Sep 98

Attachment 3

Certificate of Warehousemen's Legal Liability Insurance

CERTIFICATE OF WAREHOUSEMEN'S LEGAL LIABILITY INSURANCE

(DOD 4500.9-R)

This is to certify that a policy is now in force and includes insurance for Warehousemen's Legal Liability as required for property accepted and stored under contract with any governmental agency under Public Law 87-649 (or any other subsequent to Public Law 245) is provided in an amount not less than $1.25 times the number of pounds in storage at the time of loss subject to the limit(s) of liability specified below. A minimum per lot limit of liability of $1.25 times the net weight of the lot is mandatory.

Type all information except signature.

1. INSURANCE COMPANY	2. CONTRACTOR
a. NAME	a. NAME
b. ADDRESS *(Number, Street, City, State and ZIP Code)*	b. ADDRESS *(Number, Street, City, State and ZIP Code)*
3. POLICY NUMBER	4. EFFECTIVE DATE *(YYYYMMDD) (12:01 a.m. Standard Time at the place of issuance and continuing until cancelled as provided for in paragraph 5 below.)*

5a. ADDRESS OF WAREHOUSE	5b. LIMIT OF LIABILITY
(1)	$
(2)	$
(3)	$

Deductions under this policy are applied on an occurrence basis and shall not exceed $100.00. Deductible amount: $ _____ . If the contractor may be liable, the company may be liable. If the contractor cannot or does not handle a claim, the company assumes responsibility to see that the claim receives prompt attention, including the determination of the contractor's liability, and payment in full to the extent of that liability.

Lack of cooperation from the contractor for any reason (including contractor bankruptcy) is no defense. If necessary, the company shall seek from the claimant affidavits or other supporting documentation to permit a determination of liability.

When requested by the contracting officer, the company will provide, within thirty (30) days, a duplicate original of said policy and all endorsements thereto. The contracting officer reserves the right to reject certificates of insurance from insurance companies if they fail to provide adequate protection.

The certificate may not be cancelled without cancellation of said policy. Such cancellation or any material change may be effected by the company or the contractor only by giving thirty (30) days notice in writing to the

_____

Such notice will commence to run from the date said notice is actually received.

Insurance and surety companies must be legally authorized to issue policies of warehousemen's legal liability insurance in each state that the contractor is authorized to operate or be authorized to issue such policies in the state in which the contractor has its principal place of business. The underwriter of warehousemen's legal liability insurance must have a policyholder's rating of "A" or better in Best's Insurance Guide.

ISSUING OFFICE

6a. NAME OF INSURANCE COMPANY/UNDERWRITER/AGENT	b. ADDRESS *(Number, Street, City, State, and ZIP Code)*
c. TELEPHONE NUMBER *(Include area code)*	

7a. NAME OF AUTHORIZED INSURANCE COMPANY REPRESENTATIVE	b. SIGNATURE	c. DATE SIGNED *(YYYYMMDD)*

DD FORM 2787, SEP 1998 (EG) REPLACES MT FORM 365-R, NOV 98, WHICH IS OBSOLETE. WHS/DIOR, Oct 98

Attachment 4

Household Goods Descriptive Inventory

HOUSEHOLD GOODS DESCRIPTIVE INVENTORY

Page No. | No. of Pages

Owner's grade or ranking and name
No.

Carrier's Reference

Origin loading address | City | State

Destination

Contract or GBL No.

Exception Symbols

BE - Bent	F - Faded	PBO - Packed by owner	SO - Soiled
BR - Broken	G - Gouged		T - Torn
BU - Burned	L - Loose	R - Rubbed	W - Badly worn
CH - Chipped	M - Marred	RU - Rusted	Z - Cracked
CU - Contents & conditions unknown	MI - Mildew	SC - Scratched	CD - Disassembled by carrier
D - Dented	MO - Moth-eaten	SH - Short	MCU - Mechanical condition unknown
Veneer	CP - Packed by carrier	DBO - Disassembled by owner	

Location Symbols

1. Arm	6. Leg
2. Bottom	7. Rear
3. Corner	8. Right
4. Front	9. Side
5. Left	10. Top
	11.

NOTE: The omission of these symbols indicates good condition except for normal wear.

Item No.	Cuft	Articles	Condition of origin	Exceptions (if any) at destination

SAMPLE

Item No. REMARKS/EXCEPTIONS

IMPORTANT NOTICE Before signing, check shipment, count items and describe loss or damage in space on the right above. If for any reason you were not given an opportunity to inspect the shipment, you should call _____

"We have checked all the items listed and numbered _____ to _____ inclusive and acknowledge that this is a true and complete list of the goods tendered and of the state of the goods received."

AT ORIGIN	Contractor, carrier or authorized agent (driver) (Signature)	Date	AT DESTI-NATION (Signature)	Contractor, carrier or authorizing agent (driver)	Date
	Owner or authorized agent (Signature)	Date	(Signature)	Owner or authorized agent	Date

APPENDIX 20

Attachment 5

Locator Sheet

101 - A	2 - E - 8
102 - B	2 - E - 9
103 - C	2 - E - 10

Segretated Items O/S, Rugs, Pianos, Organs, Lawnmowers, Bicycles, Etc.

INV. ITEM NR.	ARTICLE	LOCATION	
4	9 X 12 GREEN RUG	RUG TUBE	1 - A
5	9 X 12 RUG PAD	RUG TUBE	1 - B
6	RED SOFA - 3 CUSHIONS	RACK	2 - C - 8
7	FLOWERED OVERSTUFFED CHAIR	RACK	2 - C - 9
8	LAWNMOWER	OFFICE DECK	
9	PIANO	PIANO ROOM	

SAMPLE

DATE INTO STORAGE 14 JULY 1979 TYPE STORAGE GOVT - BOA

ITEMS IN PALLET OR BOX NR. 101 - A (CIRCLE) (BASIC ORDERING AGREEMENT)

1	16	31	46	61	76	91	106	121	136	151	166	181	196	211	226	241	256	271	286
2	17	32	47	62	77	92	107	122	137	152	167	182	197	212	227	242	257	272	287
3	18	33	48	63	78	93	108	123	138	153	168	183	198	213	228	243	258	273	288
4	19	34	49	64	79	94	109	124	139	154	169	184	199	214	229	244	259	274	289
5	20	35	50	65	80	95	110	125	140	155	170	185	200	215	230	245	260	275	290
6	21	36	51	66	[redacted]								201	216	231	246	261	276	291
7	22	37	52	67	[redacted]								02	217	232	247	262	277	292
8	23	38	53	[redacted]									203	218	233	248	263	278	293
9	24	39	54	[redacted]									204	219	234	249	264	279	294
10	25	40	55	7[redacted]		100	115	130	145	160	175	190	205	220	235	250	265	280	295
11	26	41	56	71	86	101	116	131	146	161	176	191	206	221	236	251	266	281	296
12	27	42	57	72	87	102	117	132	147	[redacted]								282	297
13	28	43	58	73	88	103	118	13[redacted]	[redacted]	[redacted]								283	298
14	29	44	59	74	89	104	119	134	149	[redacted]								284	299
15	30	45	60	75	90	105	120	135	150	165	180	195	210	225	240	255	270	285	300

NAME___LT R.H. McMOORE_____
LOT NR. __63890 (Red)_____
PIECE NR._____6_____
SERVICE ORDER NR.__F22607-76-M-20611_

Attachment 6

Annual Review Requirements

As stated in Section C, clause C-1 d, this Basic Ordering Agreement (BOA) shall be reviewed, as a minimum, annually. In order to accomplish this review, the Contractor shall furnish the following information and documents to the Contracting Officer each year no later than 1 October:

a. A copy of the latest complete fiscal year (12-month) financial statement (balance sheet and profit and loss statement), certified by either an independent public accountant or an official of the firm, that it truly and fully sets forth the financial condition of the firm. The statement must be in a format consistent with generally accepted accounting principles. "Cash Basis" statements are unacceptable.

b. A certificate of insurance in effect (reference Section C, Paragraph C-7 h and attachment 3). If the present certificate on file with the Regional Storage Management Office (RSMO) is accurate, a new certificate is not required.

c. A statement as to whether or not there have been organizational changes within the firm (e.g., change of name, ownership, officers, corporate structure, etc.) during the previous year and, if so, what the changes were. An authenticated copy of the minutes of each corporate meeting during which the change(s) was/were effected or approved shall be furnished with such notification, when applicable (reference Section C, Paragraph C-7 f).

d. A copy of a lease in effect and/or evidence of ownership (e.g., tax receipt) for each storage location approved under the BOA. If present lease/evidence on file with the RSMO is current, a new lease/evidence is not required.

e. The number of service employees (excluding clerical and sales personnel) routinely employed for work under this BOA.

f. One signed copy of the current collective bargaining agreement(s) or a statement to the effect that none exist(s).

Attachment 7

Joint Statement of Loss or Damage at Delivery (DD Form 1840)

JOINT STATEMENT OF LOSS OR DAMAGE AT DELIVERY

Privacy Act Statement

AUTHORITY:	The requested information is solicited pursuant to one or more of the following: 5 U.S.C. 301, 31 U.S.C. 3721 et seq., 31 U.S.C. 3711 et seq., and EO 9397, November 1943 (SSN).
PRINCIPLE PURPOSE(S):	The information requested is to be used in evaluating claims.
ROUTINE USE(S):	The information requested is used in the settlement of claims for loss, damage or destruction of personal property and recovery from liable third parties.
DISCLOSURE:	Voluntary; however, failure to supply the requested information or to execute the form may delay or otherwise hinder the payment of your claim.

GENERAL INSTRUCTIONS: The carrier's/contractor's representative will complete and sign DD Form 1840 and obtain the signature of the member or member's agent. The member or member's agent will not, under any circumstances, sign a blank or partially completed DD Form 1840. Three completed copies of DD Form 1840 and blank DD Forms 1840R will be provided the member or member's agent by the carrier's/contractor's representative for each shipment. If no loss or damage is involved, write "NONE" in description column.

SECTION A - GENERAL *(To be completed by carrier/contractor)*

1. NAME OF OWNER *(Last, First, Middle Initial)*	2. SOCIAL SECURITY NO.	3. RANK OR GRADE	4. NET WT OF SHIPMENT

5. ORIGIN OF SHIPMENT *(City and State/Country)*	6. DESTINATION OF SHIPMENT *(City and State/Country)*

7. PPGBL/ORDER NUMBER	8. PICKUP DATE	9. NAME AND ADDRESS OF CARRIER/CONTRACTOR

10. CODE OF SERVICE	11. SCAC	12. CARRIER/CONTR REF. NO.

SECTION B - RECORD OF LOSS OR DAMAGE *(To be completed jointly by member and carrier's/contractor's representative)*

13. Notice is hereby given to the carrier/contractor to whom this statement is surrendered that the shipment was received in condition as shown below and the claim, if any, will be made for such loss or damage as indicated subject to further inspection and notification to the claims office within 70 days by DD Form 1840R found on the reverse side hereof. **THE VALUE INDICATED IN BLOCK 14c IS TO BE USED FOR QUALITY CONTROL ONLY.**

a. Inv. No.	b. Name of item	c. Description of loss or damage *(If missing, so indicate)*

14. ACKNOWLEDGMENT BY MEMBER OR AGENT *(X and complete as applicable and sign below)*

a. I received my property in apparently good condition except as indicated above. A continuation sheet [ ] was [ ] was not used.

b. Unpacking and removal of packing material, boxes, cartons, and other debris [ ] is [ ] is not waived.

c. I estimate the amount of my loss and/or damage at $

d. I have received three copies of this form. **I understand that I have 70 days to list any further loss and/or damages on the back of this form and give this to the nearest claims office, and that failure to do so may result in my being paid a smaller amount on a claim.**

e. Telephone Number | f. Date Signed

g. Signature

15. ACKNOWLEDGMENT BY CARRIER'S/CONTRACTOR'S REPRESENTATIVE *(X and complete as applicable and sign below)*

[ ] a. Property was delivered in apparently good condition except as otherwise noted above.

[ ] b. I will initiate tracer action for missing items.

c. Name of delivering carrier/agent/contractor

d. Storage in transit? [ ] Yes [ ] No

e. Signature | f. Date Signed

DD Form 1840, JAN 88 *Previous editions are obsolete* PAGE OF PAGES

Attachment 8

Notice of Loss or Damage (DD Form 1840R)

NOTICE OF LOSS OR DAMAGE

INSTRUCTIONS TO MEMBER: You have up to 70 days to inspect your property and note all loss or damage. Should you find any loss or damage not reported on DD Form 1840 at the time of delivery, complete Section A below. Use only ball-point pen or typewriter. **THE COMPLETED FORM MUST BE DELIVERED TO YOUR LOCAL CLAIMS OFFICE NOT LATER THAN 70 DAYS FROM DATE OF DELIVERY. FAILURE TO DO SO MAY RESULT IN A REDUCTION OF THE AMOUNT PAYABLE ON YOUR CLAIM.** Keep a copy of this form for your records, receipted and dated by the claims office. If more than one page is needed, please number the pages.

SECTION A - *(To be completed by member)*

1. STATEMENT OF PROPERTY LOSS OR DAMAGE: You are hereby notified of the loss or damage in the following shipment of personal property.

a. Name of Member *(Last, First, Middle Initial)*	b. PPGBL/Order Number	c. Date of Delivery

d. Origin of Shipment *(City and State/Country)*	e. Destination of Shipment *(City and State/Country)*

f. You are further notified that property owner intends to present a claim for this loss and/or damage. You are hereby extended an opportunity to inspect the property.

2. LIST OF PROPERTY LOSS / DAMAGE *(NOTE: Tracer action is requested for items listed as missing)*

a. Inv. No.	b. Name of Item	c. General Description of Loss or Damage *(If missing, so indicate)*

SECTION B - *(To be completed by claims office)*
(NOTE: Mail original to home office of carrier / contractor listed in item 9 on DD Form 1840)

3. TO *(Home Office of Carrier/Contractor)*

a. Name and Address *(Street Address, City, State, and ZIP Code)*	b. Date of Dispatch

4. YOUR REPRESENTATIVE MAY CONTACT THIS CLAIMS OFFICE FOR ASSISTANCE

a. Name and Address of Claims Officer	b. Signature	
	c. Date Signed	d. Telephone Number

DD Form 1840R, JAN 88 *Previous editions are obsolete* PAGE OF PAGES

Attachment 9 Private Vehicle Shipping Document for Motorcycle (DD Form 788-2)

PRIVATE VEHICLE SHIPPING DOCUMENT FOR MOTORCYCLE

TCMD DATA	1. DOC ID (1-3) TP1	2. CONTAINER NO. (4-8)	3. CONSIGNOR (9-14)	4. COMM-EX (15-18)	5. POE (21-23)	6. POD (24-26)	7. PACK (25-29)
8. TRANSPORTATION CONTROL NUMBER (30-46)			9. CONSIGNEE (47-52)	10. RDD (54-56)	11. TR ACCOUNT (60-67)	12. PIECES (68-71)	13. WEIGHT (72-76)
14. CUBE (77-79)	15. DOC ID (1-3) TP6	16. POV YR, MAKE (9-14)		17. OWNER'S LAST NAME (54-59)		18. F & M (67-69)	19. GRADE (69-70)

20. STATE (71-72)	21. LICENSE NUMBER (73-77)	21. COLOR (70-80)	22. BODY TYPE	23. VEHICLE IDENTIFICATION NUMBER

24. ODOMETER READING	25. VESSEL (Voyage Number)	26. AUTHORIZATION CHARGES PAID, ETC.	27. DATE LOADED (YYYYMMDD)

28. STORAGE LOCATION	29. BILLING ADDRESS FOR NOTIFICATION PURPOSES

30. Inspected in my presence, condition acknowledged as marked below, and conditions governing shipment on back accepted.	F.	(1) USER CODE	(2) INSPECTION	(3) DATE (YYYYMMDD)	(4) INSPECTOR'S PRINTED NAME (Last, First, Middle Initial)
a. DATE (YYYYMMDD)		X	(a) Turn in joint inspection - owner/agent & Government representative		
b. SIGNATURE OF OWNER OR AGENT		T	(b) POE use (Optional)		
c. NAME OF AGENT (Last, First, Middle Initial) (Print)		□	(c) POE check in stow/condition when stuffed in container		
d. STREET ADDRESS		◇	(d) POD check in stow/condition when removed from container		
e. CITY, STATE, AND ZIP CODE		○	(e) Release of custody by discharge stevedore		
		*	(f) POD use (Optional)		

Retain this form for proof of shipment for return transport at government expense or proof of POV Import Control Program participation.

31. AFTER INITIAL INSPECTION, RECORD ONLY MARS EXPOSING BARE METAL AND/OR STRUCTURAL DAMAGE.

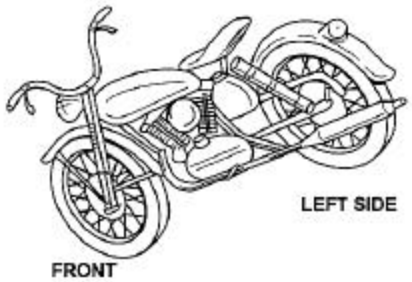

32. ENTRY NUMBER (US Customs use only)

POV CONDITION CODES						
	BE - Bent	CR - Cracked	LO - Loose	MI - Mildewed	RU - Rubbed	TO - Torn
	BR - Broken	DE - Dent	MA - Marred	PF - Paint Faded	SC - Scratched	WD - Badly Worn
	CH - Chipped	GO - Gouged	MI - Missing	RS - Rusted	SO - Soiled	

33. INTERIOR CONDITION	CODE	34. ACCESSORIES	IN BOX	LOOSE	35. PROCESSING SERVICE	POE	POD
a. FRONT SEATS		a. CATALYTIC CONVERTER/PELLETS			a. ADD/DRAIN FUEL		
b. REAR SEAT		b. SIDE MIRRORS					
c. REAR MIRROR		c. ANTENNA			b. CONNECT/DISCONNECT BATTERY		
d. FRONT SEAT BELTS		d. FAN BELT					
e. REAR SEAT BELTS		e. FENDER SKIRTS			c. PACK ACCESSORIES		
f. ASH TRAYS		f. FIRE EXTINGUISHER					
g. FLOOR MATS		g. FIRST AID KITS			d. OTHER		
h. DOOR PANELS		h. CIGARETTE LIGHTER					
i. ARM RESTS		i. HAND TOOLS/FLASHLIGHT					
j. REAR SPEAKERS (Additional)		j. HUB CAPS					
k. CUSHION		k. JACK/LUG WRENCH					
l. UPHOLSTERY		l. JUMPER CABLES					
m. RADIO (AM, FM, Tape)		m. LUGGAGE RACK					
n. CB RADIO		n. BLANKET					
o. CARPET		o. WARNING TRIANGLE/TROUBLE LIGHT					
p. CLOCK		p. SPARE TIRE					

36. DOD POV IMPORT CONTROL PROGRAM (X appropriate box)

THE MOTORCYCLE DESCRIBED ABOVE:

- [ ] a. Was manufactured after January 1, 1978 and does not have a manufacturers label affixed certifying its conformance with US EPA emissions standards. The owner must post a bond with US Customs prior to vehicle release at the US Port of Entry.
- [ ] b. Was manufactured after January 1, 1978 and does have a manufacturers label affixed certifying its conformance with US EPA emissions standards.
- [ ] c. Is not subject to the regulations under the Clean Air Act because it was manufactured before January 1, 1978.

DD FORM 788-2, SEP 1998 PREVIOUS EDITION IS OBSOLETE. Designed using Perform Pro, WHS/DIOR

Attachment 9 Private Vehicle Shipping Document for Motorcycle (DD Form 788-2 (Back))

CONDITIONS GOVERNING SHIPMENT

I UNDERSTAND AND ACCEPT THE TERMS UNDER WHICH THIS VEHICLE WILL BE TRANSPORTED OVERSEAS AS SET FORTH IN EXISTING REGULATION, i.e.:

1. That only one (1) privately-owned vehicle is being transported overseas under permanent change of station orders for the owner and/or his family as personal property, and that it is free of any legal encumbrance that would preclude its shipment and is not intended for resale. Owner must also retain a second (extra) set of keys.

2. That this vehicle contains no personal property in excess of that authorized in regulations of the Service concerned. I further understand that personal property shipped will only include those items that can fit in the container normally provided for vehicular tools and accessories.

(3) That no land transportation is authorized at Government expense except as specified in Section 12 of the Missing Persons Act, as amended, and 10 USC Section 2634(a).

(4) That failure of the owner to provide sufficient permanent type antifreeze to protect the cooling system to minus 20 degrees F (or lower if determined to be necessary by the shipping port) relieves the Government of any liability for damage due to freezing.

THIS CERTIFICATE constitutes authority for the placing in available storage chosen by the port, at the complete expense of the owner and at no cost whatsoever to the Government, the vehicle herein property of above named owner, (1) by the port of embarkation in the event that shipment of privately-owned vehicles therefrom is suspended or terminated because of a national emergency, and (2) by the port of debarkation in the event that the vehicle is not picked up by the owner or his agent within forty-five (45) days after dispatch of the notification of its arrival.

I further understand that should the vehicle be placed in such storage, the Government, thenceforth, would not be responsible for its release or return to the owner or agent.

37. DELIVERY RECEIPT

a. EXCEPTIONS

(1) BY OWNER	(2) VERIFICATION OR DISAGREEMENT WITH REASONS

b. TERMINAL SERVICE - PICKUP *(X as applicable. If unsatisfactory, specify.)* ☐ SATISFACTORY ☐ UNSATISFACTORY

38. MISCELLANEOUS INFORMATION

39. I HEREBY ACKNOWLEDGE RECEIPT OF MY VEHICLE IN THE CONDITION IN WHICH I TURNED IT IN TO THE U.S. GOVERNMENT REPRESENTATIVE FOR TRANSSHIPMENT, EXCEPT AS NOTED ABOVE.

a. SIGNATURE OF OWNER OR AGENT	b. DATE *(YYYYMMDD)*

40. SIGNATURE OF VERIFYING U.S. GOVERNMENT REPRESENTATIVE	41. NAME OF PORT

DD FORM 788-2 (BACK), SEP 1998

THIS PAGE INTENTIONALLY LEFT BLANK

APPENDIX K

MULTI-SERVICE PUBLICATIONS FOR DEPARTMENT OF DEFENSE PERSONAL PROPERTY SHIPMENT AND STORAGE PROGRAM

A. Regulations Common To, or In Use By, All Department of Defense Components.

1. Joint Federal Travel Regulations (JFTR), Volume 1.

2. Joint Travel Regulations (JTR), Volume 2.

3. Personal Property Consignment Instruction Guide.

4. Title 49, Code of Federal Regulations, Transportation.

5. Department of Defense 4000.25-6-M, Department of Defense Activity Address Directory (DoDAAD) Part I, Activity Address Code Sequence and Part II. Zip Code Sequence.

6. Department of Defense 4500.9-R, Defense Transportation Regulation, Part II, Cargo Movement.

7. Department of Defense 4500.9-R, Defense Transportation Regulation, Part V, Customs and Border Clearance Policies and Procedures.

8. DOD GEN 42A/AFP 75-52/NAVSUPPUB 590, Shipping Your POV.

9. DOD GEN 43/DA Pam 740-2/NAVSUP 591/AFJP 24-225/MCO 4600.35C/COMDTPUB P4640.4, Moving Your Mobile Home.

10. DA Pamphlet 55-2/AFJP 24-226, It's Your Move.

11. Transportation Operational Personal Property Standard System (TOPS) User Manual.

B. Commercial Publications in Use Generally.

1. "Air Tariffs".

2. "Official Motor Carrier Directory".

3. "Bullinger's Postal and Shipper's Guide to the United States and Canada".

4. "Post Offices Directory".

5. "HHG Carriers' and/or Movers' and Warehousemen's Association Participating Carrier Tariffs".

6. "Road Atlas".

C. Regulations Required by the Army.

1. AR 27-20, Claims.

2. AR 37-35, Fiscal Accounting for PCS Moves Chargeable to Appropriation, Military Personnel, Army.

3. AR 55-71, Transportation of Personal Property and Related Services.

4. AR 55-14, Transportation Transactions, Army Management Fund.

5. AR 310-10, Military Orders.

6. AR 27-20, Claims.

7. DA Circulars, 55 Series.

8. DA Pam 27-162, Claims.

9. DA Pam 27-162, Claims Procedures.

D. Regulations Required By the Navy.

1. JAG Instructions P5800.7 (Series), Manual of the JAG, Department of the Navy.

2. NAVSUP Manual, Appendix A to Volume V.

3. NAVSUP PUB 490, Transportation of Personal Property.

4. NAVCOMPT Manual, Volumes 2 and 7.

5. BUPERS Instruction 4650.14 (Series), Transportation from the United States of Overseas Destinations for Navy Military Personnel, Navy Civilian Employees, US Coast Guard Military Personnel, US Coast Guard Civilian Employees, Other Navy-Sponsored Personnel, and Qualified Dependents of the Above Principal Members.

E. Regulations Required By the Marine Corps.

1. MCBUL 4610, Cargo and Personal Property Transportation Accounting Data for Fiscal Year 20 (When requesting this bulletin, cite the complete title, including the fiscal year.)

2. MCO 1300.8L, Overseas Tours of Duty and Overseas Movement of Dependents.

F. Regulations Required By the Air Force.

1. AF Supplement to the JFTR, Air Force Personal Property Moving and Storage.

2. Air Force Instruction (AFI) 24-230, AF Activity Address Codes (Name/Organization or Code).

3. AFI 51-502, Personnel and Government Recovery Claims.

4. AFJP 24-226, It's Your Move.

5. AFPD24-4, Customs and Border Clearance.

6. AFJI 24-231, Operational Policies and Procedures-Nontemporary Storage Household Goods.

7. AFPD 24-5, Transporting and Storing Personal Property.

8. AFJI 24-232, Quality Control of Personal Property.

9. MTMC Pamphlet, Shipping Your POV.

G. Regulations Required By The Coast Guard.

1. COMDTINST M4050.6, Coast Guard Personal Property Transportation Manual.

H. Recommended Websites.

1. United States Transportation Command - Defense Transportation Regulation (DTR): http://public.transcom.mil/J4/j4lt/dtr.html

2. Per Diem, Travel and Transportation Allowance Committee: http://www.dtic.mil/perdiem/

3. Joint Federal Travel Regulations (JFTR) - Uniformed Service Personnel: http://www.dtic.mil/perdiem/jftr.html

4. Joint Travel Regulations (JTR) - Department Of Defense (DOD) Civilian Personnel: http://www.dtic.mil/perdiem/jtr.html

5. MTMC Personal Property: http://www.mtmc.army.mil

6. MTMC - Electronic Transportation Acquisitions: https://eta.mtmc.army.mil/

7. Defense Table of Official Distances: http://dtod-mtmc.belvoir.army.mil/

8. Department Of Defense (DOD) Publications: http://www.defenselink.mil/pubs/

9. Air Force Publications: http://afpubs.hq.af.mil/

10. Army Publications:
http://www.usapa.army.mil/

11. Navy Publications:
http://www.navsup.navy.mil/

12. Marine Publications:
http://pubs.ala.usmc.mil/front.htm

13. Transportation Account Codes (TAC):
https://www.DAAS.dla.mil/tac_inq/tac_menu.html

14. Army Claims:
http://www.jagcnet.army.mil/claims (select “pers claims” from main menu)

15. National Highway Traffic Safety Administration - Vehicle Importation Regulations:
http://www.nhtsa.dot.gov/cars/rules/import

16. United States Customs:
http://www.customs.ustreas.gov/travel/auto.htm

17. Air Mobility Command Sequence Listing for Channel Traffic:
https://tacc.scott.af.mil/directorates/xog/docs/sequence.pdf

APPENDIX L

TRANSIT TIMES FOR DOMESTIC THROUGH GOVERNMENT BILL OF LADING HOUSEHOLD GOODS SHIPMENTS INCLUDING ALASKA CODE 1 (MOTOR VAN) CODE 2 (CONTAINER)

A. The transit times were developed by the Military Traffic Management Command in coordination with the military Service headquarters and industry and are based on actual transportation experience, capabilities, and schedules. Normally, these are the minimum times that should be applied when constructing required delivery dates (RDDs). However, sound traffic management principles, the needs of the member/employee, existing policies and individual carrier's capabilities should apply.

B. In determining the RDD in conjunction with the transit time, the day after pickup is counted as the first day of transit time. In cases of multiple pickups for consolidated shipments, the first day of the transit time will be the day after the last shipment pickup. Transit times must be measured in calendar days (Saturdays, Sundays, and holidays are counted as part of the transit time). The day of pickup and the day of the delivery must not be scheduled on Saturdays, Sundays, or holidays unless there is a mutual agreement between the member/employee, the Personal Property Shipping Officer (PPSO), and the carrier. A lesser transit time may be applied by a transportation officer to satisfy the needs of the Department of Defense (DOD) member/employee when valid reasons exist and proper justification is provided. When assigning a transit time less than that published in this Appendix, the PPSO must advise the origin agent of the opportunity to accept or refuse the shipment. A carrier refusing to accept the shipment will not be charged with a refusal nor assessed administrative tonnage. Any carrier who accepts a lesser transit time will be expected to satisfy that requirement. Also, these transit times should not be considered as the maximum allowable when constructing the RDD.

C. These transit times must be used in conjunction with items listed in Chapter 402, to determine delivery dates that will satisfy the DOD member/employee.

TRANSIT TIME IN DAYS

WEIGHT

MILES	1 to 999 lbs	1000 to 1999 lbs	2000 to 3999 lbs	4000 to 7999 lbs	Over 8000 lbs
1 - 250	8 days	7 days	6 days	5 days	4 days
251 - 500	10 days	9 days	7 days	6 days	5 days
501 - 750	12 days	11 days	9 days	8 days	7 days
751 - 1000	14 days	12 days	10 days	9 days	8 days
1001 - 1250	15 days	13 days	11 days	10 days	9 days
1251 - 1500	16 days	14 days	12 days	11 days	10 days
1501 - 1750	17 days	15 days	13 days	12 days	11 days
1751 - 2000	18 days	16 days	14 days	13 days	12 days
2001 - 2250	19 days	17 days	15 days	14 days	13 days
2251 - 2500	20 days	18 days	16 days	15 days	14 days
2501 - 2750	21 days	19 days	17 days	16 days	15 days
2751 - 3000	22 days	20 days	18 days	17 days	16 days
3001 - 3250	23 days	21 days	19 days	18 days	17 days
3251 - 3500	24 days	22 days	20 days	19 days	18 days
3501 - 3750	25 days	23 days	21 days	20 days	19 days
3751 - 4000	26 days	24 days	22 days	21 days	20 days
4001 - 4250	27 days	25 days	23 days	22 days	21 days
4251 - 4500	28 days	26 days	24 days	23 days	22 days
4501 - 4750	29 days	27 days	25 days	24 days	23 days
4751 - 5000	30 days	28 days	26 days	25 days	24 days
5001 - 5250	31 days	29 days	27 days	26 days	25 days
5251 - 5500	32 days	30 days	28 days	27 days	26 days
5501 - 5750	33 days	31 days	29 days	28 days	27 days
5751 - 6000	34 days	32 days	30 days	29 days	28 days
6001 - 6250	35 days	33 days	31 days	30 days	29 days
6251 - 6500	36 days	34 days	32 days	31 days	30 days
6501 - 6750	37 days	35 days	33 days	32 days	31 days
6751 - 7000	38 days	36 days	34 days	33 days	32 days

NOTE: For shipments to and from Alaska, transit times are constructed as follows:

1. For shipments to and from Anchorage, Fairbanks, and all other Alaska points (except Adak, Kodiak, Juneau, Ketchikan, Sitka, and other cities located in the vicinity of these cities), add an additional 10 days for time in port to the days shown above.

2. For shipments to and from Adak, Kodiak, Juneau, Ketchikan, Sitka, and other cities located in the vicinity of these cities add an additional 20 days for time in port to the days shown above.

THIS PAGE INTENTIONALLY LEFT BLANK

APPENDIX M

TRANSIT TIMES FOR INTERNATIONAL THROUGH GOVERNMENT BILL OF LADING AND DIRECT PROCUREMENT METHOD HOUSEHOLD GOODS SHIPMENTS BETWEEN THE CONTINENTAL UNITED STATES, HAWAII, AND OVERSEAS

A. The transit times were developed by the Military Traffic Management Command in coordination with the Service headquarters and industry and are based on actual transportation experience, capabilities, and schedules and are effective for IWO2 rate cycle. Normally, these are the minimum times that should be applied when constructing required delivery dates (RDDs). However, sound traffic management principles, the needs of the member/employee, existing policies, and individual carrier's capabilities should apply.

B. In determining the RDD in conjunction with the transit time, the day after pickup is counted as the first day of transit time. In cases of multiple pickups for consolidated shipments, the first day of the transit time will be the day after the last shipment pickup. Transit times must be measured in calendar days (Saturdays, Sundays and holidays are counted as part of the transit time). The day of pickup and the day of the delivery must not be scheduled on Saturdays, Sundays, or holidays unless there is a mutual agreement between the member/employee, the Personal Property Shipping Officer (PPSO), and the carrier. A lesser transit time may be applied by a transportation officer to satisfy the needs of the Department of Defense (DOD) member/employee when valid reasons exist and proper justification is provided. When assigning a transit time less than that published in this Appendix, the PPSO must advise the origin agent of the opportunity to accept or refuse the shipment. A carrier refusing to accept the shipment will not be charged with a refusal nor assessed administrative tonnage. Any carrier who accepts a lesser transit time will be expected to satisfy that requirement. Also, these transit times should not be considered as the maximum allowable when constructing the RDD.

C. The following tables provide separate transit time standards for carrier and Government segments for Code T/TP-2 and TP-4 shipments. The three columns identified as A, B, and C, are applicable to Code T/TP-2 shipments. Column A is the carrier standard and represents the total amount of time a carrier has to include packing/pickup, and transportation to/from the aerial ports of embarkation/debarkation. Column B represents the total amount of time allotted to Air Mobility Command (AMC) from receipt of the shipment from the origin carrier to delivery of the shipment to the destination carrier. Column C is the total of Columns A and B. Code T/TP-4 is indicated in a separate column.

D. Segmented times enable PPSOs to determine whether the carrier, AMC, or both are responsible for missed RDDs. The carriers responsibility to prove they are not accountable for missed RDD's will remain unchanged. When reviewing carrier appeals claiming RDD's were missed due to delays by AMC, PPSO's can use Transportation Control and Movement Documents, or cargo manifests that show the release information to and from the AMC system as valid receipts describing the time in the AMC system.

E. The following is an example of how to use the segmented times:

1. The carrier has 30 days and the Defense Transportation System (DTS) has 14 days, for a total time of 44 days. If the shipment misses the RDD by 7 days, the carrier will be considered responsible, subject to appeal. The carrier, by documenting time into and out of aerial ports, might show the DTS took 17 days. In this example, since the DTS is only allowed 14 days, 3 of the 7 days would be charged to the DTS and 4 days to the carrier.

2. In the event PPSO's assign transit times either greater or less than the amount in this Appendix, the time will be added to (if greater) or subtracted from (if less) the carriers allotted time. The DTS time will be considered constant.

EXAMPLE: The transit time chart gives the carrier 30 days, and the DTS has 14 days. If the PPSO establishes a transit time of 49 days, the carrier would be allowed 35 days and the DTS 14 days. Alternatively, if the PPSO establishes a transit time of 39 days, the carrier would be allowed 25 days and the DTS 14 days.

RATE AREA DEFINITIONS

AS11	AUSTRALIA, CANBERRA
AS21	AUSTRALIA, ALC SP WMRA
BE	BELGIUM
GE	GERMANY
GQ	GUAM ISLAND-US
GR29	CRETE
IC	ICELAND
IT	ITALY
IT10	SICILY
IT20	SARDINIA
JA01	JAPAN, CENTRAL
JA02	JAPAN, SOUTH
JA03	JAPAN, NORTH
JA96	OKINAWA
KS	KOREA
NL	NETHERLANDS
PO	PORTUGAL
P001	AZORES
RQ	PUERTO RICO
SP	SPAIN
TU	TURKEY
UK	UNITED KINGDOM
US89	HAWAII

DOD Inter/Intra-Theater Transit Times (Code 4)

DESTINATION

ORIGIN	AS11	AS21	BE	GE	GQ	GR29	IT	IT10	IT20	JA01	JA02	JA03	JA96	KS	NL	PO01	RQ	SP	TU	UK
AS11																				
AS21																				
BE				60	60	60	60	60	60	60	60	60	60	60	60		60	60	60	55
GE			52		60	60	30	60	60	60	60	60	60	60	60		60	60	55	35
GQ			60	60		60	60	60	60	60	58	58	56	57	60		60	60	60	60
GR29			60	60	60		60	60	60	60	60	60	60	60	60		60	60	60	60
IT			60	60	60	60		53	55	60	60	60	60	60	60		60	60	60	60
IT10			60	60	60	60	53		54	60	60	60	60	60	60		60	60	60	60
IT20			60	60	60	60	55	54		60	60	60	60	60	60		60	60	60	60
JA01			60	60	55	60	60	60	60				30	60	60		60	60	60	60
JA02			60	60	60	60	60	60	60				40	60	60		60	60	60	60
JA03			60	60	60	60	60	60	60				35	55	60		60	60	60	60
JA96			60	60	53	60	60	60	60	30	30	30		55	60		60	60	60	60
KS			60	60	55	60	60	60	60	60	60	60	35		60		60	60	60	60
NL			55	56	60	60	60	60	60	60	60	60	60	60			60		60	30
PO01																				
RQ			60	60	60	60	60	60	60	55	60	60	60	60	60			60	60	60
SP			60	60	60	60	60	60	60	60	60	60	60	60	60		60		60	60
TU			60	60	60	60	60	60	60	60	60	60	60	60	60		60	59		60
UK			60	35	60	60	45	60	60	60	60	60	60	60	59		60	57	60	

DOD Inter/Intra-Theater Transit Times (Code T)

DESTINATION

ORIGIN	AS11	AS21	BE	GE	GQ	GR29	IT	IT10	IT20	JA01	JA02	JA03	JA96	KS	NL	PO01	RQ	SP	TU	UK
AS11				60	46					51	53	53	48	47		60		60	60	60
AS21				60	44					49	51	51	46	45		60		60	60	60
BE					57	41	46	46	46	60	60	60	61	60		40		42	47	42
GE	60	60			50	42	47	47	47	40	40	40	40	40		41		43	48	43
GQ	47	44	59	40		60	35	56	56	44	46	46	41	45	58	50		52	45	45
GR29			43	42	60		44	44	44	60	60	60	60	60	42	38		40	45	40
IT			47	46	35	43		48	48	60	60	60	60	60	46			44	49	44
IT10			43	42	51	39	44		44	60	60	60	59	58	42			40	45	40
IT20			47	46	55	43	48	48		60	60	60	60	60	46			44	49	44
JA01	51	35	60	40	43	60	40	60	60				45	44	60	60		60	60	45
JA02	56	53	60	60	48	60	60	60	60				50	49	60	60		60	60	60
JA03	54	51	60	60	46	60	60	60	60				48	47	60	60		60	60	60
JA96	48	45	60	35	40	60	40	60	60	45	47	47		41		57		59	45	45
KS	47	44	55	35	39	60	60	60	60	44	46	46	41		60	40		58	45	40
NL					57	41	46	46	46	60	60	60	60	60		40		42	47	42
PO01	60	60	43	25	40	39				60	60	60	59	58	42			40	45	40
RQ																				
SP	60	60	43	42	51	39	44	44	44	60	60	60	59	58	42	38			45	40
TU	60	60	48	35	56	44	49	49	49	60	60	60	60	60	47	43		45		45
UK	60	60	43	42	35	39	44	44	44	40	40	45	35	30	42	38		40	45	

DOD Inter/Intra-Theater Transit Times (Code 5)

DESTINATION

ORIGIN	AS11	AS21	BE	GE	GQ	GR29	IT	IT10	IT20	JA01	JA02	JA03	JA96	KS	NL	PO01	RQ	SP	TU	UK
AS11																				
AS21																				
BE																				
GE																				
GQ																52				
GR29																				
IT																60				
IT10																60				
IT20																60				
JA01																58				
JA02																60				
JA03																58				
JA96																45				
KS																53				
NL																				
PO01																				
RQ																60				
SP																				
TU																				
UK																60				

BETWEEN AS11 AND	STATE	4	5	A	B	T TP2 C	T TP4	DPM MTMC SURFACE
US11	ME					37	60	90
US12	NH					37	60	90
US13	VT					37	60	90
US14	MA					37	60	89
US15	RI					37	60	89
US16	CT					37	60	89
US17	NY					35	60	87
US19	NJ					34	60	87
US20	PA					35	60	87
US22	DE					34	60	87
US23	MD					34	60	87
US24	DC					34	60	87
US25	VA					33	60	87
US27	WV					34	60	87
US28	KY					33	60	86
US30	MI					34	60	86
US32	WI					34	60	85
US34	OH					33	60	86
US36	IN					33	60	85
US38	IL					33	60	85
US40	NC					33	60	86
US42	TN					33	60	86
US44	SC					33	60	86
US45	GA					33	60	86
US47	AL					33	60	86
US48	MS					33	60	86
US49	FL-N					33	60	86
US496	FL-S					34	60	88
US50	MN					33	60	85
US51	ND					32	60	85
US52	SD					32	60	84
US53	IA					32	60	84
US55	NE					31	60	84
US56	MO					32	60	84
US58	KS					31	60	84
US60	AR					32	60	84
US62	OK					31	60	84
US64	LA					32	60	85
US66	TX-N					30	60	85
US68	TX-S					31	60	84
US70	MT					30	60	80
US72	WY					30	60	81
US74	CO					29	60	80
US76	UT					26	60	80
US77	NM					28	60	80
US79	AZ					25	60	79
US83	ID					29	60	80
US84	WA					29	60	79
US85	OR					29	60	81
US86	NV					25	60	78
US87	CA-N					25	60	77
US88	CA-S					24	60	78
US89	HI							47

BETWEEN AS21 AND	STATE	4	5	A	B	T TP2 C	T TP4	DPM MTMC SURFACE
US11	ME	60				37	60	90
US12	NH	60				37	60	90
US13	VT	60				37	60	90
US14	MA	60				37	60	89
US15	RI	60				37	60	89
US16	CT	60				37	60	89
US17	NY	60				35	60	87
US19	NJ	60				34	60	87
US20	PA	60				35	60	87
US22	DE	60				34	60	87
US23	MD	60				34	60	87
US24	DC	60				34	60	87
US25	VA	60				33	60	87
US27	WV	60				34	60	87
US28	KY	60				33	60	86
US30	MI	60				34	60	86
US32	WI	60				34	60	85
US34	OH	60				33	60	86
US36	IN	60				33	60	85
US38	IL	60				33	60	85
US40	NC	60				33	60	86
US42	TN	60				33	60	86
US44	SC	60				33	60	86
US45	GA	60				33	60	86
US47	AL	60				33	60	86
US48	MS	60				33	60	86
US49	FL-N	60				33	60	86
US496	FL-S	60				34	60	88
US50	MN	60				33	60	85
US51	ND	60				32	60	85
US52	SD	60				32	60	84
US53	IA	60				32	60	84
US55	NE	60				31	60	84
US56	MO	60				32	60	84
US58	KS	60				31	60	84
US60	AR	60				32	60	84
US62	OK	60				31	60	84
US64	LA	60				32	60	85
US66	TX-N	60				30	60	85
US68	TX-S	60				31	60	84
US70	MT	60				30	60	80
US72	WY	60				30	60	81
US74	CO	60				29	60	80
US76	UT	60				26	60	80
US77	NM	60				28	60	80
US79	AZ	60				25	60	79
US83	ID	60				29	60	80
US84	WA	60				29	60	79
US85	OR	60				29	60	81
US86	NV	60				25	60	78
US87	CA-N	60				25	60	77
US88	CA-S	60				24	60	78
US89	HI						47	

BETWEEN BE AND	STATE	4	5	A	B	T TP2 C	T TP4	DPM MTMC SURFACE
US11	ME	59	60			25	58	66
US12	NH	59	60			25	58	66
US13	VT	59	58			25	58	64
US14	MA	56	57			22	55	63
US15	RI	56	57			22	55	63
US16	CT	56	57			22	55	63
US17	NY	50	58			24	57	64
US19	NJ	56	57			22	55	63
US20	PA	57	58			23	56	64
US22	DE	56	57			22	55	63
US23	MD	56	57			22	55	63
US24	DC	56	57			22	55	63
US25	VA	57	59			23	56	65
US27	WV	50	59			22	55	65
US28	KY	55	60			24	57	67
US30	MI	60	60			28	60	67
US32	WI	60	60			26	59	69
US34	OH	57	59			23	56	65
US36	IN	58	60			24	57	66
US38	IL	59	60			25	58	66
US40	NC	55	60			24	57	66
US42	TN	58	60			26	57	68
US44	SC	55	60			26	56	66
US45	GA	55	60			26	56	71
US47	AL	60	60			27	57	70
US48	MS	60	60			27	57	70
US49	FL-N	55	60			27	56	71
US496	FL-S	58	60			28	57	72
US50	MN	60	60			28	60	69
US51	ND	60	60			30	60	71
US52	SD	60	60			30	60	71
US53	IA	60	60			26	60	69
US55	NE	60	60			29	60	69
US56	MO	60	60			28	59	66
US58	KS	55	60			29	59	73
US60	AR	55	60			28	57	70
US62	OK	55	60			30	58	73
US64	LA	60	60			28	56	69
US66	TX-N	55	60			30	58	73
US68	TX-S	55	60			30	56	71
US70	MT	60	60			32	60	73
US72	WY	60	60			31	60	72
US74	CO	60	60			31	60	75
US76	UT	60	60			31	60	74
US77	NM	60	60			30	60	74
US79	AZ	55	56			31	60	62
US83	ID	60	60			32	60	74
US84	WA	60	60			32	60	73
US85	OR	60	60			32	60	75
US86	NV	60	60			32	60	71
US87	CA-N	60	60			32	60	71
US88	CA-S	60	60			32	60	70
US89	HI	60						

BETWEEN GE AND	STATE	4	5	A	B	T TP2 C	T TP4	DPM MTMC SURFACE
US11	ME	60	60			26	60	69
US12	NH	60	60			26	60	69
US13	VT	60	60			26	60	67
US14	MA	59	59			23	59	66
US15	RI	59	59			23	59	66
US16	CT	59	59			23	59	66
US17	NY	55	60			25	60	67
US19	NJ	55	59			23	59	66
US20	PA	60	60			24	60	67
US22	DE	59	59			23	59	66
US23	MD	55	59			23	59	66
US24	DC	59	59			23	59	66
US25	VA	60	60			24	60	68
US27	WV	50	60			23	59	68
US28	KY	60	60			25	60	70
US30	MI	60	60			29	60	70
US32	WI	60	60			27	60	72
US34	OH	60	60			24	60	68
US36	IN	60	60			25	60	69
US38	IL	60	60			26	60	69
US40	NC	55	60			25	60	69
US42	TN	60	60			27	60	71
US44	SC	55	52			27	60	69
US45	GA	55	60			27	60	73
US47	AL	60	60			28	60	72
US48	MS	60	60			28	60	72
US49	FL-N	55	60			28	60	73
US496	FL-S	55	60			29	60	74
US50	MN	60	60			29	60	72
US51	ND	60	60			31	60	74
US52	SD	70	60			31	60	74
US53	IA	60	60			27	60	72
US55	NE	60	60			30	60	72
US56	MO	60	60			29	60	72
US58	KS	60	60			30	60	75
US60	AR	60	60			29	60	72
US62	OK	60	60			31	60	75
US64	LA	60	60			29	60	71
US66	TX-N	60	60			31	60	75
US68	TX-S	60	60			31	60	73
US70	MT	70	60			33	60	76
US72	WY	60	60			32	60	75
US74	CO	60	60			32	60	77
US76	UT	60	60			32	60	76
US77	NM	60	60			31	60	76
US79	AZ	60	60			32	60	74
US83	ID	60	60			33	60	76
US84	WA	60	60			33	60	75
US85	OR	60	60			33	60	77
US86	NV	60	60			33	60	74
US87	CA-N	60	60			33	60	73
US88	CA-S	60	60			33	60	73
US89	HI	60	48				60	

BETWEEN GQ AND	STATE	4	5	A	B	T TP2 C	T TP4	DPM MTMC SURFACE
US11	ME	60	60			33	60	70
US12	NH	60	60			33	60	70
US13	VT	60	60			33	60	68
US14	MA	60	60			32	60	67
US15	RI	60	60			32	60	67
US16	CT	60	60			32	60	67
US17	NY	60	60			30	60	68
US19	NJ	60	60			30	60	67
US20	PA	60	60			30	60	68
US22	DE	60	60			30	60	67
US23	MD	55	60			30	60	67
US24	DC	60	60			30	60	67
US25	VA	60	60			30	60	65
US27	WV	55	60			30	60	65
US28	KY	60	60			29	60	67
US30	MI	60	60			29	60	71
US32	WI	60	60			28	60	73
US34	OH	60	60			29	60	69
US36	IN	60	60			28	60	70
US38	IL	60	60			28	60	70
US40	NC	55	60			29	60	66
US42	TN	60	60			29	60	68
US44	SC	60	60			29	60	66
US45	GA	60	60			29	60	68
US47	AL	60	60			29	60	67
US48	MS	60	60			29	60	67
US49	FL-N	60	60			29	60	68
US496	FL-S	60	60			31	60	69
US50	MN	60	60			28	60	70
US51	ND	60	60			28	60	67
US52	SD	58	60			27	60	67
US53	IA	60	60			27	60	70
US55	NE	55	60			27	60	64
US56	MO	62	60			27	60	69
US58	KS	60	60			27	60	70
US60	AR	60	60			27	60	67
US62	OK	60	60			27	60	70
US64	LA	60	60			28	60	66
US66	TX-N	60	60			28	60	70
US68	TX-S	58	60			27	60	68
US70	MT	60	60			23	60	68
US72	WY	55	57			24	58	60
US74	CO	54	56			23	57	59
US76	UT	54	56			23	57	59
US77	NM	54	60			23	57	63
US79	AZ	50	57			22	56	60
US83	ID	57	59			23	57	62
US84	WA	50	57			22	55	60
US85	OR	50	58			24	56	61
US86	NV	52	57			21	55	60
US87	CA-N	50	53			20	54	56
US88	CA-S	50	56			21	55	59
US89	HI	58					42	

BETWEEN GR29AND	STATE	4	5	A	B	T TP2 C	T TP4	DPM MTMC SURFACE
US11	ME	60	60			26	60	74
US12	NH	60	60			26	60	74
US13	VT	60	60			26	60	72
US14	MA	60	60			23	60	71
US15	RI	60	60			23	60	71
US16	CT	60	60			23	60	71
US17	NY	60	60			25	60	72
US19	NJ	60	60			23	60	71
US20	PA	60	60			24	60	72
US22	DE	60	60			23	60	71
US23	MD	60	60			23	60	71
US24	DC	60	60			23	60	71
US25	VA	60	60			24	60	68
US27	WV	60	60			23	60	68
US28	KY	60	60			25	60	70
US30	MI	60	60			29	60	75
US32	WI	60	60			27	60	77
US34	OH	60	60			24	60	73
US36	IN	60	60			25	60	74
US38	IL	60	60			26	60	74
US40	NC	60	60			25	60	69
US42	TN	60	60			27	60	71
US44	SC	60	60			27	60	69
US45	GA	60	60			27	60	70
US47	AL	60	60			28	60	71
US48	MS	60	60			28	60	72
US49	FL-N	60	60			28	60	70
US496	FL-S	60	60			29	60	71
US50	MN	60	60			29	60	77
US51	ND	60	60			31	60	79
US52	SD	60	60			31	60	79
US53	IA	60	60			27	60	77
US55	NE	60	60			30	60	77
US56	MO	60	60			29	60	73
US58	KS	60	60			30	60	75
US60	AR	60	60			29	60	73
US62	OK	60	60			31	60	75
US64	LA	60	60			29	60	72
US66	TX-N	60	60			31	60	75
US68	TX-S	60	60			31	60	76
US70	MT	60	60			33	60	81
US72	WY	60	60			32	60	80
US74	CO	60	60			32	60	77
US76	UT	60	60			32	60	78
US77	NM	60	60			31	60	76
US79	AZ	60	60			32	60	77
US83	ID	60	60			33	60	81
US84	WA	60	60			33	60	81
US85	OR	60	60			33	60	81
US86	NV	60	60			33	60	78
US87	CA-N	60	60			33	60	78
US88	CA-S	60	60			33	60	78
US89	HI	60					60	

BETWEEN IC AND	STATE	4	5	A	B	T TP2 C	T TP4	DPM MTMC SURFACE
US11	ME	55	55			24	55	54
US12	NH	55	55			24	55	54
US13	VT	55	55			24	55	54
US14	MA	53	53			22	53	52
US15	RI	55	55			24	55	54
US16	CT	55	55			24	55	54
US17	NY	54	54			23	54	53
US19	NJ	55	55			24	55	54
US20	PA	53	53			22	53	52
US22	DE	52	52			21	52	51
US23	MD	52	52			21	52	51
US24	DC	52	52			21	52	51
US25	VA	45	52			21	52	51
US27	WV	45	52			21	52	51
US28	KY	54	54			23	54	53
US30	MI	55	55			24	55	54
US32	WI	55	57			24	55	56
US34	OH	54	54			23	54	53
US36	IN	55	55			24	55	54
US38	IL	56	56			25	56	55
US40	NC	53	45			22	53	52
US42	TN	55	55			24	55	54
US44	SC	53	50			22	53	52
US45	GA	54	45			23	54	53
US47	AL	50	55			24	55	54
US48	MS	56	56			25	56	55
US49	FL-N	54	45			23	54	53
US496	FL-S	55	55			24	55	54
US50	MN	59	59			28	59	58
US51	ND	60	60			29	60	59
US52	SD	60	60			29	60	59
US53	IA	58	58			27	58	57
US55	NE	59	59			28	59	58
US56	MO	55	57			26	57	56
US58	KS	59	59			28	59	58
US60	AR	57	57			26	57	56
US62	OK	59	59			28	59	58
US64	LA	56	56			25	56	55
US66	TX-N	59	59			28	59	58
US68	TX-S	60	50			29	60	59
US70	MT	60	60			31	60	61
US72	WY	60	60			30	60	60
US74	CO	60	60			30	60	60
US76	UT	60	60			30	60	60
US77	NM	60	50			29	60	59
US79	AZ	60	60			30	60	60
US83	ID	60	60			31	60	61
US84	WA	60	60			31	60	61
US85	OR	60	55			32	60	62
US86	NV	60	55			31	60	61
US87	CA-N	60	60			31	60	61
US88	CA-S	60	55			31	60	61
US89	HI							

BETWEEN IT AND	STATE	4	5	A	B	T TP2 C	T TP4	DPM MTMC SURFACE
US11	ME	59	60			29	60	65
US12	NH	59	60			29	60	65
US13	VT	59	60			29	60	63
US14	MA	56	60			26	60	62
US15	RI	56	60			26	60	62
US16	CT	56	60			26	60	62
US17	NY	58	60			28	60	63
US19	NJ	56	60			26	60	62
US20	PA	57	60			27	60	63
US22	DE	56	60			26	60	62
US23	MD	56	60			26	60	62
US24	DC	56	60			26	60	62
US25	VA	57	60			27	60	65
US27	WV	56	60			26	60	65
US28	KY	58	60			28	60	67
US30	MI	62	60			32	60	66
US32	WI	60	60			30	60	68
US34	OH	57	60			27	60	64
US36	IN	58	60			28	60	65
US38	IL	59	60			29	60	65
US40	NC	56	60			28	60	66
US42	TN	55	60			30	60	68
US44	SC	53	53			30	59	66
US45	GA	53	60			30	59	67
US47	AL	60	60			31	60	68
US48	MS	60	60			31	60	69
US49	FL-N	54	60			31	59	67
US496	FL-S	55	60			32	60	68
US50	MN	60	60			32	60	68
US51	ND	60	60			34	60	70
US52	SD	60	60			34	60	70
US53	IA	60	60			30	60	68
US55	NE	60	60			33	60	68
US56	MO	60	60			32	60	70
US58	KS	60	60			33	60	72
US60	AR	60	60			32	60	70
US62	OK	60	60			34	60	72
US64	LA	59	60			32	60	69
US66	TX-N	60	60			34	60	72
US68	TX-S	60	60			34	60	73
US70	MT	60	60			36	60	72
US72	WY	60	60			35	60	71
US74	CO	60	60			35	60	74
US76	UT	60	60			35	60	75
US77	NM	60	60			34	60	73
US79	AZ	60	60			35	60	74
US83	ID	60	60			36	60	72
US84	WA	60	60			36	60	72
US85	OR	60	60			36	60	72
US86	NV	60	60			36	60	75
US87	CA-N	60	60			36	60	75
US88	CA-S	60	60			36	60	75
US89	HI	60					58	

BETWEEN IT10 AND	STATE	4	5	A	B	T TP2 C	T TP4	DPM MTMC SURFACE
US11	ME	57	60			28	60	68
US12	NH	57	60			28	60	68
US13	VT	57	60			28	60	66
US14	MA	54	60			26	58	65
US15	RI	54	60			28	60	65
US16	CT	54	60			28	58	65
US17	NY	56	60			27	60	66
US19	NJ	54	60			28	58	65
US20	PA	55	60			26	59	66
US22	DE	54	60			25	58	65
US23	MD	54	60			25	58	65
US24	DC	54	60			25	58	65
US25	VA	55	60			25	59	68
US27	WV	54	60			25	58	68
US28	KY	56	60			27	60	70
US30	MI	60	60			28	60	69
US32	WI	58	60			28	60	71
US34	OH	55	60			27	59	67
US36	IN	56	60			28	60	68
US38	IL	57	60			29	60	68
US40	NC	54	60			26	58	69
US42	TN	53	60			28	58	71
US44	SC	51	60			26	57	69
US45	GA	51	60			27	57	70
US47	AL	58	60			28	60	71
US48	MS	58	60			29	60	72
US49	FL-N	52	60			27	57	70
US496	FL-S	53	60			28	58	71
US50	MN	60	60			32	60	71
US51	ND	60	60			33	60	73
US52	SD	60	60			33	60	73
US53	IA	60	60			31	60	71
US55	NE	60	60			32	60	71
US56	MO	60	60			30	60	73
US58	KS	60	60			32	60	75
US60	AR	58	60			30	60	73
US62	OK	60	60			32	60	75
US64	LA	57	60			29	60	72
US66	TX-N	60	60			32	60	75
US68	TX-S	58	60			33	60	76
US70	MT	60	60			35	60	75
US72	WY	60	60			34	60	74
US74	CO	60	60			34	60	77
US76	UT	60	60			34	60	78
US77	NM	60	60			33	60	76
US79	AZ	60	60			34	60	77
US83	ID	60	60			35	60	75
US84	WA	60	60			35	60	75
US85	OR	60	60			36	60	75
US86	NV	60	60			35	60	78
US87	CA-N	59	60			35	60	78
US88	CA-S	60	60			35	60	78
US89	HI	60					56	

BETWEEN IT20 AND	STATE	4	5	A	B	T TP2 C	T TP4	DPM MTMC SURFACE
US11	ME	60	60			30	60	68
US12	NH	60	60			30	60	68
US13	VT	60	60			30	60	66
US14	MA	60	60			28	60	65
US15	RI	60	60			30	60	65
US16	CT	60	60			30	60	65
US17	NY	62	60			29	60	66
US19	NJ	60	60			30	60	65
US20	PA	60	60			28	60	66
US22	DE	60	60			27	60	65
US23	MD	60	60			27	60	65
US24	DC	60	60			27	60	65
US25	VA	60	60			27	60	72
US27	WV	60	60			27	60	72
US28	KY	60	60			29	60	74
US30	MI	60	60			30	60	69
US32	WI	60	60			30	60	71
US34	OH	60	60			29	60	67
US36	IN	60	60			30	60	68
US38	IL	60	60			31	60	68
US40	NC	60	60			28	60	73
US42	TN	59	60			30	60	75
US44	SC	57	60			28	60	73
US45	GA	57	60			29	60	74
US47	AL	64	60			30	60	75
US48	MS	64	60			31	60	76
US49	FL-N	58	60			29	60	74
US496	FL-S	59	60			30	60	75
US50	MN	60	60			34	60	71
US51	ND	60	60			35	60	73
US52	SD	60	60			35	60	73
US53	IA	60	60			33	60	71
US55	NE	60	60			34	60	71
US56	MO	60	60			32	60	77
US58	KS	60	60			34	60	79
US60	AR	60	60			32	60	77
US62	OK	60	60			34	60	79
US64	LA	60	60			31	60	76
US66	TX-N	60	60			34	60	79
US68	TX-S	60	60			35	60	80
US70	MT	60	60			37	60	75
US72	WY	60	60			36	60	74
US74	CO	60	60			36	60	81
US76	UT	60	60			36	60	82
US77	NM	60	60			35	60	80
US79	AZ	60	60			36	60	81
US83	ID	60	60			37	60	75
US84	WA	60	60			37	60	75
US85	OR	60	60			38	60	75
US86	NV	60	60			37	60	82
US87	CA-N	60	60			37	60	82
US88	CA-S	60	60			37	60	82
US89	HI	60	56				58	

BETWEEN JA01 AND	STATE	4	5	A	B	T TP2 C	T TP4	DPM MTMC SURFACE
US11	ME	60	60			35	60	67
US12	NH	60	60			35	60	67
US13	VT	60	60			35	60	65
US14	MA	60	60			34	60	64
US15	RI	55	60			34	60	64
US16	CT	60	60			34	60	64
US17	NY	60	60			32	60	65
US19	NJ	60	60			32	60	64
US20	PA	60	60			32	60	65
US22	DE	60	60			32	60	64
US23	MD	60	60			32	60	64
US24	DC	60	60			32	60	64
US25	VA	60	60			32	60	66
US27	WV	60	60			32	60	66
US28	KY	60	60			31	60	68
US30	MI	60	60			31	60	68
US32	WI	60	60			30	60	70
US34	OH	60	60			31	60	66
US36	IN	60	60			30	60	67
US38	IL	60	60			30	60	67
US40	NC	60	60			31	60	67
US42	TN	60	60			31	60	69
US44	SC	60	60			31	60	67
US45	GA	60	60			31	60	67
US47	AL	60	60			31	60	66
US48	MS	60	60			31	60	66
US49	FL-N	60	60			31	60	67
US496	FL-S	60	60			33	60	68
US50	MN	60	60			30	60	64
US51	ND	59	60			30	60	61
US52	SD	60	60			29	60	61
US53	IA	60	60			29	60	64
US55	NE	60	57			29	60	58
US56	MO	60	60			29	60	68
US58	KS	60	60			29	60	69
US60	AR	60	60			29	60	66
US62	OK	60	60			29	60	69
US64	LA	60	60			30	60	65
US66	TX-N	60	60			30	60	69
US68	TX-S	59	60			29	60	67
US70	MT	60	60			25	60	62
US72	WY	60	59			26	60	60
US74	CO	60	58			25	59	59
US76	UT	59	58			25	56	59
US77	NM	55	60			25	65	61
US79	AZ	50	57			24	55	58
US83	ID	54	55			25	56	56
US84	WA	52	53			24	54	54
US85	OR	50	54			26	55	55
US86	NV	55	57			23	55	58
US87	CA-N	50	55			22	55	56
US88	CA-S	50	56			23	54	57
US89	HI	60	55				46	

BETWEEN JA02 AND	STATE	4	5	A	B	T TP2 C	T TP4	DPM MTMC SURFACE
US11	ME	60	60			40	60	71
US12	NH	60	60			40	60	71
US13	VT	60	60			40	60	69
US14	MA	60	60			39	60	68
US15	RI	60	60			39	60	68
US16	CT	60	60			39	60	68
US17	NY	60	60			37	60	69
US19	NJ	60	60			37	60	68
US20	PA	60	60			37	60	69
US22	DE	60	60			37	60	68
US23	MD	60	60			37	60	68
US24	DC	60	60			37	60	68
US25	VA	60	60			37	60	70
US27	WV	60	60			37	60	70
US28	KY	60	60			36	60	72
US30	MI	60	60			36	60	72
US32	WI	60	60			35	60	74
US34	OH	60	60			36	60	70
US36	IN	60	60			35	60	71
US38	IL	60	60			35	60	71
US40	NC	60	60			36	60	71
US42	TN	60	60			36	60	73
US44	SC	60	60			36	60	71
US45	GA	60	60			36	60	71
US47	AL	60	60			36	60	70
US48	MS	60	60			36	60	70
US49	FL-N	60	60			36	60	71
US496	FL-S	60	60			38	60	72
US50	MN	60	60			35	60	68
US51	ND	60	60			35	60	65
US52	SD	60	60			34	60	65
US53	IA	60	60			34	60	68
US55	NE	60	60			34	60	62
US56	MO	60	60			34	60	72
US58	KS	60	60			34	60	73
US60	AR	60	60			34	60	70
US62	OK	60	60			34	60	73
US64	LA	60	60			35	60	69
US66	TX-N	60	60			35	60	73
US68	TX-S	60	60			34	60	71
US70	MT	60	60			30	60	66
US72	WY	60	60			31	60	64
US74	CO	60	60			30	60	63
US76	UT	60	60			30	59	63
US77	NM	60	60			30	60	65
US79	AZ	55	60			29	58	62
US83	ID	57	58			30	59	60
US84	WA	55	56			29	57	58
US85	OR	56	57			31	58	59
US86	NV	60	60			28	58	62
US87	CA-N	55	58			27	58	60
US88	CA-S	55	59			28	57	61
US89	HI	60	55				51	

BETWEEN JA03 AND	STATE	4	5	A	B	T TP2 C	T TP4	DPM MTMC SURFACE
US11	ME	60	60			40	60	71
US12	NH	60	60			40	60	71
US13	VT	60	60			40	60	69
US14	MA	60	60			39	60	68
US15	RI	60	60			39	60	68
US16	CT	60	60			39	60	68
US17	NY	60	60			37	60	69
US19	NJ	60	60			37	60	68
US20	PA	60	60			37	60	69
US22	DE	60	60			37	60	68
US23	MD	60	60			37	60	68
US24	DC	60	60			37	60	68
US25	VA	60	60			37	60	70
US27	WV	60	60			37	60	70
US28	KY	60	60			36	60	72
US30	MI	60	60			36	60	72
US32	WI	60	60			35	60	74
US34	OH	60	60			36	60	70
US36	IN	60	60			35	60	71
US38	IL	60	60			35	60	71
US40	NC	60	60			36	60	71
US42	TN	60	60			36	60	73
US44	SC	60	60			36	60	71
US45	GA	60	60			36	60	71
US47	AL	60	60			36	60	70
US48	MS	60	60			36	60	70
US49	FL-N	60	60			36	60	71
US496	FL-S	60	60			38	60	72
US50	MN	60	60			35	60	68
US51	ND	60	60			35	60	65
US52	SD	60	60			34	60	65
US53	IA	60	60			34	60	68
US55	NE	60	60			34	60	62
US56	MO	60	60			34	60	72
US58	KS	60	60			34	60	73
US60	AR	60	60			34	60	70
US62	OK	60	60			34	60	73
US64	LA	60	60			35	60	69
US66	TX-N	60	60			35	60	73
US68	TX-S	60	60			34	60	71
US70	MT	60	60			30	60	66
US72	WY	60	60			31	60	64
US74	CO	60	60			30	60	63
US76	UT	55	60			30	59	63
US77	NM	55	60			30	60	65
US79	AZ	55	60			29	58	62
US83	ID	57	58			30	59	60
US84	WA	55	56			29	57	58
US85	OR	56	57			31	58	59
US86	NV	60	60			28	58	62
US87	CA-N	50	58			27	58	60
US88	CA-S	60	59			28	33	61
US89	HI	60	53				49	

BETWEEN JA96 AND	STATE	4	5	A	B	T TP2 C	T TP4	DPM MTMC SURFACE
US11	ME	60	60			38	60	70
US12	NH	60	60			38	60	70
US13	VT	60	60			38	60	68
US14	MA	60	60			37	60	67
US15	RI	60	60			37	60	67
US16	CT	60	60			37	60	67
US17	NY	60	60			35	60	68
US19	NJ	60	60			35	60	67
US20	PA	60	60			35	60	68
US22	DE	60	60			35	60	67
US23	MD	60	60			35	60	67
US24	DC	60	60			35	60	67
US25	VA	60	60			35	60	71
US27	WV	60	60			35	60	71
US28	KY	60	60			34	60	73
US30	MI	60	60			34	60	71
US32	WI	60	60			33	60	73
US34	OH	60	60			34	60	69
US36	IN	60	60			33	60	70
US38	IL	60	60			33	54	70
US40	NC	60	60			34	60	72
US42	TN	60	60			34	60	74
US44	SC	60	60			34	60	72
US45	GA	60	60			34	60	69
US47	AL	60	60			34	60	68
US48	MS	60	60			34	60	68
US49	FL-N	60	60			34	60	69
US496	FL-S	60	60			36	60	70
US50	MN	60	60			33	60	70
US51	ND	60	60			33	59	67
US52	SD	60	60			32	60	67
US53	IA	60	60			32	60	70
US55	NE	60	60			32	60	64
US56	MO	60	60			32	60	70
US58	KS	60	60			32	60	71
US60	AR	60	60			32	60	68
US62	OK	60	60			32	60	71
US64	LA	60	60			33	60	67
US66	TX-N	60	60			33	60	71
US68	TX-S	60	60			32	60	69
US70	MT	60	60			28	60	68
US72	WY	60	60			29	58	63
US74	CO	60	60			28	57	62
US76	UT	60	60			28	54	62
US77	NM	55	63			28	60	65
US79	AZ	55	60			27	53	62
US83	ID	60	60			28	54	62
US84	WA	58	58			27	52	60
US85	OR	55	59			29	53	61
US86	NV	55	60			26	53	62
US87	CA-N	50	57			25	53	59
US88	CA-S	55	59			26	52	61
US89	HI	58	59				43	

BETWEEN KS AND	STATE	4	5	A	B	T TP2 C	T TP4	DPM MTMC SURFACE
US11	ME	60	60			37	60	74
US12	NH	60	60			37	60	74
US13	VT	60	60			37	60	72
US14	MA	60	60			36	60	71
US15	RI	60	60			36	60	71
US16	CT	60	60			36	60	71
US17	NY	60	60			34	60	72
US19	NJ	60	60			34	60	71
US20	PA	60	60			34	60	72
US22	DE	60	60			34	60	71
US23	MD	60	60			34	60	71
US24	DC	60	60			34	60	71
US25	VA	60	60			34	60	75
US27	WV	60	60			34	60	75
US28	KY	60	60			33	60	77
US30	MI	60	60			33	60	75
US32	WI	60	60			32	60	77
US34	OH	60	60			33	60	73
US36	IN	60	60			32	60	74
US38	IL	60	60			32	60	74
US40	NC	60	60			33	60	76
US42	TN	60	60			33	60	78
US44	SC	60	60			33	60	76
US45	GA	60	60			33	60	73
US47	AL	60	60			33	60	72
US48	MS	60	60			33	60	72
US49	FL-N	60	60			33	60	73
US496	FL-S	60	60			35	60	74
US50	MN	60	60			32	60	74
US51	ND	60	60			32	60	71
US52	SD	60	60			31	60	71
US53	IA	60	60			31	60	74
US55	NE	60	60			31	60	68
US56	MO	60	60			31	60	74
US58	KS	60	60			31	60	75
US60	AR	60	60			31	60	72
US62	OK	60	60			31	60	75
US64	LA	60	60			32	60	71
US66	TX-N	60	60			32	60	75
US68	TX-S	60	60			31	60	73
US70	MT	60	60			27	60	72
US72	WY	60	60			28	60	67
US74	CO	60	60			27	60	66
US76	UT	60	60			27	60	66
US77	NM	60	60			27	60	69
US79	AZ	60	60			26	60	66
US83	ID	60	60			27	60	66
US84	WA	60	60			26	58	64
US85	OR	55	60			28	59	65
US86	NV	60	60			25	60	66
US87	CA-N	55	60			24	60	63
US88	CA-S	55	60			25	60	65
US89	HI	53					42	

BETWEEN NL AND	STATE	4	5	A	B	T TP2 C	T TP4	DPM MTMC SURFACE
US11	ME	59	60			26	53	66
US12	NH	59	60			26	53	66
US13	VT	59	60			26	53	64
US14	MA	56	59			23	50	63
US15	RI	56	59			23	50	63
US16	CT	56	59			23	50	63
US17	NY	58	60			25	52	64
US19	NJ	56	59			23	27	63
US20	PA	57	60			24	51	64
US22	DE	56	59			23	50	63
US23	MD	56	59			23	50	63
US24	DC	56	59			23	50	63
US25	VA	57	60			24	51	65
US27	WV	56	60			23	50	65
US28	KY	60	60			25	56	67
US30	MI	60	60			29	56	67
US32	WI	60	60			27	54	69
US34	OH	57	60			24	51	65
US36	IN	58	60			25	52	66
US38	IL	59	60			26	53	66
US40	NC	57	60			25	51	66
US42	TN	59	60			27	50	68
US44	SC	57	60			27	48	66
US45	GA	55	60			27	49	70
US47	AL	60	60			28	53	69
US48	MS	60	60			28	53	69
US49	FL-N	60	60			28	54	70
US496	FL-S	58	60			29	52	71
US50	MN	60	60			29	56	69
US51	ND	60	60			31	60	71
US52	SD	60	60			31	60	71
US53	IA	60	60			27	59	69
US55	NE	60	60			30	58	69
US56	MO	60	60			29	55	69
US58	KS	55	60			30	56	72
US60	AR	60	60			29	53	69
US62	OK	60	60			31	55	72
US64	LA	60	60			29	52	68
US66	TX-N	60	60			31	55	72
US68	TX-S	60	60			31	53	70
US70	MT	60	60			33	60	73
US72	WY	60	60			32	60	72
US74	CO	60	60			32	54	74
US76	UT	60	60			32	58	73
US77	NM	60	60			31	56	73
US79	AZ	60	60			32	57	71
US83	ID	60	60			33	60	73
US84	WA	60	60			33	60	72
US85	OR	60	60			33	60	74
US86	NV	60	60			33	59	71
US87	CA-N	60	60			33	60	70
US88	CA-S	60	60			33	60	70
US89	HI	60	60				60	

BETWEEN PO AND	STATE	4	5	A	B	T TP2 C	T TP4	DPM MTMC SURFACE
US11	ME	60	60					66
US12	NH	60	60					66
US13	VT	60	59					64
US14	MA	60	58					63
US15	RI	60	58					63
US16	CT	60	58					63
US17	NY	60	58					64
US19	NJ	60	58					63
US20	PA	60	59					64
US22	DE	60	58					63
US23	MD	60	58					63
US24	DC	60	58					63
US25	VA	60	60					65
US27	WV	60	60					65
US28	KY	60	60					66
US30	MI	60	60					67
US32	WI	60	60					69
US34	OH	60	60					65
US36	IN	60	60					66
US38	IL	60	60					66
US40	NC	57	60					65
US42	TN	59	60					67
US44	SC	57	60					65
US45	GA	57	60					66
US47	AL	60	60					67
US48	MS	60	60					68
US49	FL-N	60	60					67
US496	FL-S	59	60					69
US50	MN	60	60					69
US51	ND	60	60					71
US52	SD	60	60					71
US53	IA	60	60					69
US55	NE	60	60					69
US56	MO	60	60					69
US58	KS	60	60					71
US60	AR	60	60					70
US62	OK	60	60					70
US64	LA	60	60					70
US66	TX-N	60	60					71
US68	TX-S	60	60					71
US70	MT	60	60					73
US72	WY	60	60					72
US74	CO	60	60					72
US76	UT	60	60					73
US77	NM	60	60					71
US79	AZ	60	60					73
US83	ID	60	60					73
US84	WA	60	60					73
US85	OR	60	60					73
US86	NV	60	60					73
US87	CA-N	60	60					73
US88	CA-S	60	60					73
US89	HI							

BETWEEN PO01 AND	STATE	4	5	A	B	T TP2 C	T TP4	DPM MTMC SURFACE
US11	ME	56	58			24	57	63
US12	NH	56	58			24	57	63
US13	VT	56	56			22	57	61
US14	MA	53	55			21	54	60
US15	RI	53	55			21	54	60
US16	CT	53	55			21	54	60
US17	NY	55	56			22	56	61
US19	NJ	53	55			21	54	60
US20	PA	54	56			22	55	61
US22	DE	53	55			21	54	60
US23	MD	53	55			21	54	60
US24	DC	53	55			21	54	60
US25	VA	54	50			23	55	62
US27	WV	53	55			23	54	62
US28	KY	55	58			24	56	63
US30	MI	59	59			25	60	64
US32	WI	57	61			27	58	66
US34	OH	54	57			23	55	62
US36	IN	55	58			24	56	63
US38	IL	56	58			24	57	63
US40	NC	53	57			23	55	62
US42	TN	55	59			25	56	64
US44	SC	53	55			23	54	62
US45	GA	53	58			24	55	63
US47	AL	60	59			25	60	64
US48	MS	60	60			26	60	65
US49	FL-N	60	55			25	60	64
US496	FL-S	55	60			27	56	66
US50	MN	60	60			27	60	66
US51	ND	60	60			29	60	68
US52	SD	60	60			29	60	68
US53	IA	60	60			27	60	66
US55	NE	60	60			27	60	66
US56	MO	60	50			27	60	66
US58	KS	60	60			29	60	68
US60	AR	60	60			28	60	67
US62	OK	60	60			28	60	67
US64	LA	60	60			28	60	67
US66	TX-N	60	60			25	60	68
US68	TX-S	60	60			25	60	68
US70	MT	60	60			31	60	70
US72	WY	60	60			30	60	69
US74	CO	60	60			30	60	69
US76	UT	60	55			31	60	70
US77	NM	60	55			29	60	68
US79	AZ	60	55			31	60	70
US83	ID	60	60			31	60	70
US84	WA	60	60			31	60	70
US85	OR	60	60			31	60	70
US86	NV	60	60			31	60	70
US87	CA-N	60	60			31	60	70
US88	CA-S	60	60			31	60	70
US89	HI		52				54	

BETWEEN RQ AND	STATE	4	5	A	B	T TP2 C	T TP4	DPM MTMC SURFACE
US11	ME	50	44			24	45	50
US12	NH	50	44			24	45	50
US13	VT	50	42			24	45	48
US14	MA	47	41			22	42	47
US15	RI	47	41			24	42	47
US16	CT	47	41			24	42	47
US17	NY	49	42			23	44	48
US19	NJ	40	41			24	42	47
US20	PA	48	42			22	43	48
US22	DE	47	41			21	42	47
US23	MD	47	41			21	42	47
US24	DC	47	41			21	42	47
US25	VA	48	43			21	43	49
US27	WV	47	43			21	42	49
US28	KY	46	44			23	41	50
US30	MI	53	45			24	48	51
US32	WI	51	47			24	46	53
US34	OH	48	43			23	43	49
US36	IN	49	44			24	44	50
US38	IL	50	43			25	45	49
US40	NC	45	41			22	40	47
US42	TN	46	43			24	42	49
US44	SC	45	41			22	40	47
US45	GA	40	42			23	40	48
US47	AL	45	41			24	44	47
US48	MS	49	41			25	44	47
US49	FL-N	45	42			23	45	48
US496	FL-S	45	43			24	41	49
US50	MN	53	48			28	48	54
US51	ND	56	48			29	51	54
US52	SD	56	47			29	51	53
US53	IA	51	47			27	46	53
US55	NE	45	46			28	48	52
US56	MO	51	43			26	46	49
US58	KS	51	44			28	46	50
US60	AR	49	41			26	44	47
US62	OK	50	44			28	45	50
US64	LA	48	40			25	43	46
US66	TX-N	50	44			28	45	50
US68	TX-S	48	42			29	43	48
US70	MT	56	46			31	51	52
US72	WY	56	48			30	51	54
US74	CO	51	46			30	46	52
US76	UT	53	47			30	48	53
US77	NM	51	45			29	46	51
US79	AZ	52	46			30	47	52
US83	ID	56	50			31	51	56
US84	WA	50	50			31	51	56
US85	OR	50	50			32	52	56
US86	NV	54	48			31	49	54
US87	CA-N	55	48			31	50	54
US88	CA-S	54	47			31	49	53
US89	HI	60						

BETWEEN SP AND	STATE	4	5	A	B	T TP2 C	T TP4	DPM MTMC SURFACE
US11	ME	60	60			25	60	72
US12	NH	60	60			25	60	72
US13	VT	60	60			25	60	70
US14	MA	59	60			22	59	69
US15	RI	59	60			22	59	69
US16	CT	59	60			22	59	69
US17	NY	60	60			24	60	70
US19	NJ	59	60			22	59	69
US20	PA	60	60			23	60	70
US22	DE	59	60			22	59	69
US23	MD	59	60			22	59	69
US24	DC	59	60			22	59	69
US25	VA	50	60			23	60	71
US27	WV	59	60			22	59	71
US28	KY	60	60			24	60	73
US30	MI	60	60			28	60	73
US32	WI	60	60			26	60	75
US34	OH	60	60			23	60	71
US36	IN	60	60			24	22	72
US38	IL	60	60			25	62	72
US40	NC	50	60			24	59	72
US42	TN	60	60			26	60	74
US44	SC	59	60			26	59	72
US45	GA	55	60			26	60	73
US47	AL	50	60			27	60	74
US48	MS	60	60			27	60	75
US49	FL-N	55	60			27	60	73
US496	FL-S	60	60			28	60	74
US50	MN	60	60			28	60	75
US51	ND	60	60			30	60	77
US52	SD	60	60			30	60	77
US53	IA	60	60			26	60	75
US55	NE	60	60			29	60	75
US56	MO	60	60			28	60	76
US58	KS	60	60			29	60	78
US60	AR	60	60			28	60	76
US62	OK	60	60			30	60	78
US64	LA	59	60			28	59	75
US66	TX-N	55	60			30	60	78
US68	TX-S	55	60			30	60	79
US70	MT	69	60			32	60	79
US72	WY	60	60			31	60	78
US74	CO	60	60			31	60	80
US76	UT	60	60			31	60	80
US77	NM	60	60			30	60	79
US79	AZ	60	60			31	60	80
US83	ID	60	60			32	60	79
US84	WA	60	60			32	60	79
US85	OR	60	60			32	60	79
US86	NV	60	60			32	60	81
US87	CA-N	60	60			32	60	81
US88	CA-S	60	60			32	60	81
US89	HI	60					54	

BETWEEN TU AND	STATE	4	5	A	B	T TP2 C	T TP4	DPM MTMC SURFACE
US11	ME	60	60			28	60	72
US12	NH	60	60			28	60	72
US13	VT	60	60			28	60	70
US14	MA	60	60			25	60	69
US15	RI	60	60			25	60	69
US16	CT	60	60			25	60	69
US17	NY	60	60			27	60	70
US19	NJ	60	60			25	60	69
US20	PA	60	60			26	60	70
US22	DE	60	60			25	60	69
US23	MD	60	60			25	60	69
US24	DC	60	60			25	60	69
US25	VA	60	60			26	60	71
US27	WV	60	60			25	60	71
US28	KY	60	60			27	60	72
US30	MI	60	60			31	60	73
US32	WI	60	60			29	60	75
US34	OH	60	60			26	60	71
US36	IN	60	60			27	60	72
US38	IL	60	60			28	60	72
US40	NC	60	60			27	60	71
US42	TN	60	60			29	60	73
US44	SC	60	60			29	60	71
US45	GA	60	60			29	60	72
US47	AL	60	60			30	60	73
US48	MS	60	60			30	60	74
US49	FL-N	60	60			30	60	73
US496	FL-S	60	60			31	60	75
US50	MN	60	60			31	60	75
US51	ND	60	60			33	60	77
US52	SD	60	60			33	60	77
US53	IA	60	60			29	60	75
US55	NE	60	60			32	60	75
US56	MO	60	60			31	60	75
US58	KS	60	60			32	60	77
US60	AR	60	60			31	60	76
US62	OK	60	60			33	60	76
US64	LA	60	60			31	60	76
US66	TX-N	60	60			33	60	77
US68	TX-S	60	60			33	60	77
US70	MT	60	60			35	60	79
US72	WY	60	60			34	60	78
US74	CO	60	60			34	60	78
US76	UT	60	60			34	60	79
US77	NM	60	60			33	60	77
US79	AZ	60	60			34	60	79
US83	ID	60	60			35	60	79
US84	WA	60	60			35	60	79
US85	OR	60	60			35	60	79
US86	NV	60	60			35	60	79
US87	CA-N	60	60			35	60	79
US88	CA-S	60	60			35	60	79
US89	HI	60					60	

BETWEEN UK AND	STATE	4	5	A	B	T TP2 C	T TP4	DPM MTMC SURFACE
US11	ME	60	60			25	60	65
US12	NH	60	60			25	60	65
US13	VT	60	60			25	60	63
US14	MA	57	59			24	57	62
US15	RI	57	59			23	57	62
US16	CT	57	59			23	57	62
US17	NY	59	60			25	59	63
US19	NJ	57	59			23	57	62
US20	PA	55	60			24	58	63
US22	DE	57	59			22	57	62
US23	MD	57	59			22	57	62
US24	DC	57	59			22	57	62
US25	VA	58	60			22	58	66
US27	WV	50	60			23	57	66
US28	KY	53	60			23	59	68
US30	MI	60	60			27	60	66
US32	WI	60	60			28	60	68
US34	OH	58	60			24	58	64
US36	IN	59	60			24	59	65
US38	IL	60	60			25	60	65
US40	NC	59	60			21	59	67
US42	TN	60	60			23	56	69
US44	SC	54	60			21	54	67
US45	GA	55	60			21	55	66
US47	AL	55	60			21	60	65
US48	MS	60	60			23	60	65
US49	FL-N	55	60			22	58	66
US496	FL-S	57	60			23	57	67
US50	MN	60	60			29	60	68
US51	ND	60	60			29	60	70
US52	SD	60	60			28	60	70
US53	IA	60	60			26	60	68
US55	NE	60	60			27	60	68
US56	MO	60	60			25	60	68
US58	KS	55	60			27	60	68
US60	AR	60	60			24	60	65
US62	OK	60	60			27	60	68
US64	LA	60	60			24	60	64
US66	TX-N	60	60			27	60	68
US68	TX-S	55	60			27	60	66
US70	MT	60	60			30	60	72
US72	WY	60	60			29	60	71
US74	CO	60	60			29	60	70
US76	UT	60	60			30	60	77
US77	NM	60	60			29	60	69
US79	AZ	55	60			29	60	75
US83	ID	60	60			31	60	77
US84	WA	60	60			31	60	76
US85	OR	60	60			31	60	78
US86	NV	60	60			31	60	75
US87	CA-N	60	60			31	60	74
US88	CA-S	60	60			30	60	74
US89	HI	60	60				58	

BETWEEN US89 AND	STATE	4	5	A	B	T TP2 C	T TP4	DPM MTMC SURFACE
US11	ME	56	57			35	60	60
US12	NH	56	57			35	60	60
US13	VT	56	55			35	60	59
US14	MA	53	54			34	58	58
US15	RI	53	54			34	58	58
US16	CT	53	54			34	58	58
US17	NY	55	55			32	60	59
US19	NJ	53	54			32	58	58
US20	PA	54	55			32	59	59
US22	DE	53	54			32	58	58
US23	MD	53	54			32	58	58
US24	DC	53	54			32	58	58
US25	VA	52	52			32	57	56
US27	WV	53	54			32	58	58
US28	KY	53	54			31	58	58
US30	MI	59	58			31	60	60
US32	WI	49	60			30	54	60
US34	OH	54	56			31	59	60
US36	IN	55	57			30	60	60
US38	IL	56	57			30	60	60
US40	NC	52	53			31	57	57
US42	TN	52	55			31	57	59
US44	SC	55	53			31	60	57
US45	GA	53	54			31	58	58
US47	AL	52	53			31	57	57
US48	MS	50	53			31	55	57
US49	FL-N	51	54			31	56	58
US496	FL-S	52	55			33	57	59
US50	MN	49	54			30	54	58
US51	ND	49	51			30	54	55
US52	SD	48	51			29	53	55
US53	IA	48	54			29	53	58
US55	NE	49	48			29	54	52
US56	MO	50	55			29	55	59
US58	KS	49	56			29	54	60
US60	AR	50	53			29	55	57
US62	OK	49	54			29	54	58
US64	LA	50	52			30	55	56
US66	TX-N	47	56			30	52	60
US68	TX-S	48	54			29	53	58
US70	MT	51	52			25	56	56
US72	WY	45	46			26	50	50
US74	CO	44	45			25	49	49
US76	UT	44	45			25	49	49
US77	NM	46	47			25	51	51
US79	AZ	43	44			24	48	48
US83	ID	44	58			25	49	50
US84	WA	43	58			24	48	48
US85	OR	44	46			26	49	49
US86	NV	42	44			23	47	48
US87	CA-N	41	45			22	47	46
US88	CA-S	41	44			23	46	47
US89	HI							

APPENDIX N

TRANSIT TIMES FOR INTERNATIONAL THROUGH GOVERNMENT BILL OF LADING AND DIRECT PROCUREMENT METHOD (DPM) UNACCOMPANIED BAGGAGE SHIPMENTS BETWEEN THE CONTINENTAL UNITED STATES, HAWAII, AND OVERSEAS

A. The transit times were developed by the Military Traffic Management Command in coordination with the Service headquarters, United States Transportation Command, and industry and are based on Required Port Delivery Date (RPDD) policy, actual transportation experience, capabilities, and schedules and are effective for IWO2 rate cycle. Normally, these are the minimum times that should be applied when constructing required delivery dates (RDDs). However, sound traffic management principles, the needs of the member/employee, existing policies, and individual carrier's capabilities should apply.

B. In determining the RDD in conjunction with the transit time, the day after pickup is counted as the first day of transit time except for Code J and DPM Air Mobility Command (AMC) air shipments. For Code J shipments, transit time starts on the 5th day after pickup, and for DPM AMC air shipments, transit time starts on the 2nd day after pickup. In cases of multiple pickups for consolidated shipments, the first day of the transit time rules above apply to the last shipment pickup. Transit times must be measured in calendar days (Saturdays, Sundays and holidays are counted as part of the transit time). The day of pickup and the day of the delivery must not be scheduled on Saturdays, Sundays, or holidays unless there is a mutual agreement between the member/employee, the Personal Property Shipping Officer (PPSO), and the carrier. A lesser transit time may be applied by a transportation officer to satisfy the needs of the Department of Defense member/employee when valid reasons exist and proper justification is provided. When assigning a transit time less than that published in this Appendix, the PPSO must advise the origin agent of the opportunity to accept or refuse the shipment. A carrier refusing to accept the shipment will not be charged with a refusal nor assessed administrative tonnage. Any carrier who accepts a lesser transit time will be expected to satisfy that requirement. Also, these transit times should not be considered as the maximum allowable when constructing the RDD.

C. The following provides separate transit time standards for carrier and Government segments for Code J shipments. The four columns identified as J1, J2, J3, and TOT, are applicable to Code J shipments. J1 represents the amount of time a carrier has for packing, pickup/origin agent processing, transportation to the aerial port of embarkation (see Appendix R), and origin port agent processing time. J2 represents the total amount of the time allotted to AMC from receipt of the shipment from the origin port agent to delivery of the shipment to the destination port agent. J3 is destination port agent processing time and transportation from the aerial port of debarkation to destination. Column TOT is the total of columns J1, J2, and J3. Note: Carrier packing, pickup, origin processing port agent handling and delivery does not include weekends and holidays. (MTMC International Advisory 02 June 00 RPDD requirements)

D. Segmented times enable the PPSO to determine whether the carrier, AMC, or both are responsible for missed RDD. The carriers' responsibility to prove they are not accountable for missed RDDs will remain unchanged. When reviewing carrier appeals claiming RDD's were missed due to delays by AMC, PPSO's can use Transportation Control and Movement

Documents, cargo manifests, automated port agent reports or manifests (or facsimiles of such) that show the release information to and from the AMC system as valid receipts describing time in the AMC system.

E. The following is an example of how to use the segmented times:

1. The carrier has 27 days and the Defense Transportation System (DTS) has 14 days, for a total time of 41 days. If the shipment misses the RDD by 7 days, the carrier will be considered responsible, subject to appeal. The carrier, by documenting time into and out of aerial ports, might show the DTS took 16 days. In this example, since the DTS is only allowed 14 days, 2 of the 7 days would be charged to the DTS and 5 days to the carrier.

2. In the event PPSO's assign transit times either greater or less than the amount in this Appendix, the time will be added to (if greater) or subtracted from (if less) the carriers allotted time. The DTS time will be considered constant.

EXAMPLE: Transit time chart gives the carrier 30 days, and the DTS has 8 days. If the PPSO establishes a transit time of 45 days, the carrier would be allowed 37 days and the DTS 8 days. Alternately, if the PPSO establishes a transit time of 35 days, the carrier would be allowed 27 days and the DTS 8 days.

RATE AREA DEFINITIONS

AS11	AUSTRALIA, CANBERRA
AS21	AUSTRALIA, ALC SP WMRA
BE	BELGIUM
GE	GERMANY
GQ	GUAM ISLAND-US
GR29	CRETE
IC	ICELAND
IT	ITALY
IT10	SICILY
IT20	SARDINIA
JA01	JAPAN, CENTRAL
JA02	JAPAN, SOUTH
JA03	JAPAN, NORTH
JA96	OKINAWA
KS	KOREA
NL	NETHERLANDS
PO	PORTUGUAL
P001	AZORES
RQ	PUERTO RICO
SP	SPAIN
TU	TURKEY
UK	UNITED KINGDOM
US89	HAWAII

DOD Inter/Intra-Theater Transit Times (Code J)

DESTINATION

ORIGIN	AS11	AS21	BE	GE	GQ	GR29	IT	IT10	IT20	JA01	JA02	JA03	JA96	KS	NL	PO01	RQ	SP	TU	UK
AS11																				
AS21																				
BE																				
GE					40		42	41		45	60	45	45	45				37	39	38
GQ				40			50	49		37	39	39	30	30				40	40	50
GR29																				
IT				30	40			42		60	60	60	53	40				38	30	39
IT10				41	48		44			60	60	60	54	56				39	41	40
IT20																				
JA01				55	25		58	57					20	20				53	60	54
JA02				60	39		60	60					30	41				60	60	61
JA03				45	37		60	60					30	30				58	60	50
JA96				40	25		57	56		25	25	25		25				52	60	50
KS				35	25		40	55		30	39	30	25					51	40	45
NL																				
PO01																				
RQ																				
SP				20	44		40	39		57	59	59	50	52					37	36
TU				30	53		40	39		60	60	60	56	58				35		36
UK				25	40		25	25		57	59	59	50	52				35	25	

BETWEEN AS11										
AND		7	8	J1	J2	J3	TOT	DPM MTMC SUR	DPM AMC AIR	DPM COM AIR
US11	ME			16	14	11	41	82	34	32
US12	NH			16	14	11	41	82	34	32
US13	VT			16	14	11	41	82	34	32
US14	MA			16	14	11	41	82	34	32
USI5	RI			16	14	11	41	82	34	32
US16	CT			16	14	11	41	82	34	32
US17	NY			16	14	11	41	82	34	32
US19	NJ			16	14	11	41	82	34	32
US20	PA			16	14	11	41	82	34	32
US22	DE			16	14	11	41	82	34	32
US23	MD			16	14	11	41	82	34	32
US24	DC			16	14	11	41	82	34	32
US25	VA			16	14	11	41	82	34	32
US27	WV			16	14	11	41	82	34	32
US28	KY			14	14	12	40	81	33	31
US30	MI			14	14	12	40	81	33	31
US32	WI			14	14	11	39	80	32	30
US34	OH			14	14	12	40	81	33	31
US36	IN			14	14	11	39	80	32	30
US38	IL			14	14	11	39	80	32	30
US40	NC			14	14	13	41	82	34	32
US42	TN			14	14	12	40	81	33	31
US44	SC			14	14	13	41	82	34	32
US45	GA			14	14	12	40	81	33	31
US47	AL			14	14	11	39	80	32	30
US48	MS			14	14	11	39	80	32	30
US49	FL-N			16	14	11	41	82	34	32
US496	FL-S			16	14	11	41	82	34	32
US50	MN			14	14	10	38	79	31	29
US51	ND			14	14	12	40	81	33	31
US52	SD			14	14	13	41	80	34	30
US53	IA			14	14	10	38	79	31	29
US55	ME			16	14	8	38	79	31	29
US56	MO			14	14	10	38	79	31	29
US58	KS			12	14	11	37	78	30	28
US60	AR			14	14	11	39	80	32	30
US62	OK			12	14	11	37	78	30	28
US64	LA			12	14	13	39	80	32	30
US66	TX - N			12	14	11	37	78	30	28
US68	TX - S			12	14	11	37	78	30	28
US70	MT			12	14	12	38	79	31	29
US72	WY			11	14	10	35	76	28	26
US74	CO			11	14	10	35	76	28	26
US76	UT			11	14	9	34	75	27	25
US77	NM			12	14	9	35	76	28	26
US79	AZ			11	14	9	34	75	27	25
US83	ID			11	14	9	34	75	27	25
US84	WA			11	14	9	34	75	27	25
US85	OR			11	14	9	34	75	27	25
US86	NV			11	14	9	34	75	27	25
US87	CA - N			10	14	9	33	74	26	24
US88	CA - S			10	14	9	33	74	26	24
US89	HI									

BETWEEN AS21										
AND		7	8	J1	J2	J3	TOT	DPM MTMC SUR	DPM AMC AIR	DPM COM AIR
US11	ME			16	14	11	41	82	34	32
US12	NH			16	14	11	41	82	34	32
US13	VT			16	14	11	41	82	34	32
US14	MA			16	14	11	41	82	34	32
USIS	RI			16	14	11	41	82	34	32
US16	CT			16	14	11	41	82	34	32
US17	NY			16	14	11	41	82	34	32
US19	NJ			16	14	11	41	82	34	32
US20	PA			16	14	11	41	82	34	32
US22	DE			16	14	11	41	82	34	32
US23	MD			16	14	11	41	82	34	32
US24	DC			16	14	11	41	82	34	32
US25	VA			16	14	11	41	82	34	32
US27	WV			16	14	11	41	82	34	32
US28	KY			14	14	12	40	81	33	31
US30	MI			14	14	12	40	81	33	31
US32	WI			14	14	11	39	80	32	30
US34	OH			14	14	12	40	81	33	31
US36	IN			14	14	11	39	80	32	30
US38	IL			14	14	11	39	80	32	30
US40	NC			14	14	13	41	82	34	32
US42	TN			14	14	12	40	81	33	31
US44	SC			14	14	13	41	82	34	32
US45	GA			14	14	12	40	81	33	31
US47	AL			14	14	11	39	80	32	30
US48	MS			14	14	11	39	80	32	30
US49	FL-N			16	14	11	41	82	34	32
US496	FL-S			16	14	11	41	82	34	32
US50	MN			14	14	10	38	79	31	29
US51	ND			14	14	12	40	81	33	31
US52	SD			14	14	13	41	80	34	30
US53	IA			14	14	10	38	79	31	29
US55	ME			16	14	8	38	79	31	29
US56	MO			14	14	10	38	79	31	29
US58	KS			12	14	11	37	78	30	28
US60	AR			14	14	11	39	80	32	30
US62	OK			12	14	11	37	78	30	28
US64	LA			12	14	13	39	80	32	30
US66	TX - N			12	14	11	37	78	30	28
US68	TX - S			12	14	11	37	78	30	28
US70	MT			12	14	12	38	79	31	29
US72	WY			11	14	10	35	76	28	26
US74	CO			11	14	10	35	76	28	26
US76	UT			11	14	10	34	75	27	25
US77	NM			12	14	9	35	76	28	26
US79	AZ			11	14	9	34	75	27	25
US83	ID			11	14	9	34	75	27	25
US84	WA			11	14	9	34	75	27	25
US85	OR			11	14	9	34	75	27	25
US86	NV			11	14	9	34	75	27	25
US87	CA - N			10	14	9	33	74	26	24
US88	CA - S			10	14	9	33	74	26	24
US89	HI									

BETWEEN BE										
AND		7	8	J1	J2	J3	TOT	DPM MTMC SUR	DPM AMC AIR	DPM COM AIR
US11	ME	49	19	11	8	8	27	61	30	28
US12	NH	49	19	10	8	9	27	61	30	28
US13	VT	49	18	11	8	8	27	60	30	27
US14	MA	49	18	10	8	9	27	60	30	27
USIS	RI	48	18	10	8	8	26	60	29	27
US16	CT	48	18	10	8	8	26	60	29	27
US17	NY	48	18	10	8	8	26	60	29	27
US19	NJ	48	18	10	8	8	26	60	29	27
US20	PA	48	18	10	8	8	26	60	29	27
US22	DE	48	18	9	8	9	26	60	29	27
US23	MD	48	18	10	8	8	26	60	29	27
US24	DC	48	18	10	8	8	26	60	29	27
US25	VA	48	19	10	8	8	26	62	29	28
US27	WV	48	19	10	8	8	26	62	29	28
US28	KY	49	19	11	8	9	28	62	31	28
US30	MI	49	19	11	8	8	27	61	30	28
US32	WI	49	19	11	8	8	27	61	30	28
US34	OH	48	19	11	8	8	27	61	30	28
US36	IN	49	19	11	8	9	28	61	31	28
US38	IL	49	20	11	8	8	27	62	30	29
US40	NC	48	19	10	8	8	26	62	29	28
US42	TN	49	19	11	8	8	27	62	30	28
US44	SC	49	19	10	8	8	26	62	29	28
US45	GA	49	19	11	8	8	27	67	30	28
US47	AL	53	20	12	8	8	28	66	31	29
US48	MS	53	20	12	8	8	28	66	31	29
US49	FL-N	49	20	11	8	8	27	68	30	29
US496	FL-S	49	20	11	8	8	27	68	30	29
US50	MN	52	22	12	8	10	30	62	33	31
US51	ND	55	25	14	8	11	33	67	36	34
US52	SD	55	19	13	8	11	32	66	35	28
US53	IA	54	20	12	8	10	30	64	33	29
US55	ME	54	23	11	8	11	30	65	33	32
US56	MO	54	20	12	8	8	28	62	31	29
US58	KS	53	22	13	8	9	30	67	33	31
US60	AR	53	22	12	8	8	28	66	31	31
US62	OK	53	22	13	8	10	31	67	34	31
US64	LA	53	22	12	8	8	28	66	31	31
US66	TX - N	53	22	13	8	6	27	66	30	31
US68	TX - S	53	22	13	8	6	27	66	30	31
US70	MT	57	26	14	8	12	34	68	37	35
US72	WY	55	24	14	8	10	32	66	35	33
US74	CO	54	24	14	8	9	31	68	34	33
US76	UT	55	24	14	8	10	32	69	35	33
US77	NM	53	23	14	8	10	32	67	35	32
US79	AZ	54	24	14	8	11	33	59	36	33
US83	ID	56	24	14	8	12	34	69	37	33
US84	WA	55	26	16	8	10	34	69	37	35
US85	OR	55	26	16	8	10	34	69	37	35
US86	NV	55	25	15	8	10	33	68	36	34
US87	CA - N	54	26	16	8	10	34	68	37	35
US88	CA - S	54	26	16	8	10	34	67	37	35
US89	HI									

BETWEEN GE										
AND		7	8	J1	J2	J3	TOT	DPM MTMC SUR	DPM AMC AIR	DPM COM AIR
US11	ME	53	23	11	8	10	29	64	32	30
US12	NH	53	23	10	8	11	29	64	32	30
US13	VT	53	22	11	8	10	29	63	32	29
US14	MA	53	22	10	8	11	29	63	32	29
USIS	RI	52	22	10	8	10	28	63	31	29
US16	CT	52	22	10	8	10	28	63	31	29
US17	NY	52	22	10	8	10	28	63	31	29
US19	NJ	52	22	10	8	10	28	63	31	29
US20	PA	52	22	10	8	10	28	63	31	29
US22	DE	52	22	9	8	11	28	63	31	29
US23	MD	52	22	10	8	10	28	63	31	29
US24	DC	52	22	10	8	10	28	63	31	29
US25	VA	52	23	10	8	10	28	65	31	30
US27	WV	52	32	10	8	10	28	65	31	30
US28	KY	53	23	11	8	11	30	65	33	30
US30	MI	53	23	11	8	10	29	64	32	30
US32	WI	53	23	11	8	10	29	64	32	30
US34	OH	52	23	11	8	10	29	64	32	30
US36	IN	53	23	11	8	11	30	64	33	30
US38	IL	53	24	11	8	10	29	65	32	31
US40	NC	52	23	10	8	10	28	65	31	30
US42	TN	52	23	11	8	10	29	65	32	30
US44	SC	53	23	10	8	10	28	65	31	30
US45	GA	53	23	11	8	9	28	69	32	30
US47	AL	57	24	12	8	10	30	68	33	31
US48	MS	57	24	12	8	10	30	68	33	31
US49	FL-N	53	24	11	8	10	29	70	32	31
US496	FL-S	53	24	11	8	10	29	70	32	31
US50	MN	56	26	12	8	12	32	65	35	33
US51	ND	59	29	14	8	13	35	70	38	36
US52	SD	59	23	13	8	13	34	69	37	30
US53	IA	58	24	12	8	12	32	67	35	31
US55	ME	58	27	11	8	13	32	68	35	34
US56	MO	58	24	12	8	10	30	65	33	31
US58	KS	57	26	13	8	11	32	69	35	33
US60	AR	57	26	12	8	10	30	68	33	33
US62	OK	57	26	13	8	12	33	69	36	33
US64	LA	57	26	12	8	10	30	68	33	33
US66	TX - N	57	26	13	8	8	29	68	32	33
US68	TX - S	57	26	13	8	8	29	68	32	33
US70	MT	60	30	14	8	14	36	71	39	37
US72	WY	59	28	14	8	12	34	69	37	35
US74	CO	58	28	14	8	11	33	70	36	35
US76	UT	59	28	14	8	12	34	71	37	35
US77	NM	57	27	14	8	12	34	69	37	34
US79	AZ	58	28	14	8	13	35	71	38	35
US83	ID	60	28	14	8	14	36	71	39	35
US84	WA	59	30	16	8	12	36	71	39	37
US85	OR	59	30	16	8	12	36	71	39	37
US86	NV	59	29	15	8	12	35	71	38	36
US87	CA - N	58	30	16	8	12	36	70	39	37
US88	CA - S	58	30	16	8	12	36	70	39	37
US89	HI						51			

BETWEEN GQ										
AND		7	8	J1	J2	J3	TOT	DPM MTMC SUR	DPM AMC AIR	DPM COM AIR
US11	ME	56	26	16	8	8	32	65	34	32
US12	NH	56	26	16	8	8	32	65	34	32
US13	VT	56	28	16	8	8	32	64	34	32
US14	MA	56	26	16	8	8	32	64	34	32
USIS	RI	55	26	15	8	9	32	64	34	32
US16	CT	55	26	16	8	8	32	64	34	32
US17	NY	55	26	15	8	9	32	64	34	32
US19	NJ	55	26	16	8	8	32	64	34	32
US20	PA	55	26	14	8	10	32	64	34	32
US22	DE	55	26	16	8	8	32	64	34	32
US23	MD	55	26	16	8	8	32	64	34	32
US24	DC	55	26	16	8	8	32	64	34	32
US25	VA	55	26	16	8	8	32	62	34	32
US27	WV	55	26	14	8	8	32	62	34	32
US28	KY	56	25	14	8	9	31	62	33	31
US30	MI	56	25	14	8	9	31	65	33	31
US32	WI	56	24	14	8	8	30	65	32	30
US34	OH	55	25	14	8	9	31	65	33	31
US36	IN	56	24	14	8	8	30	65	32	30
US38	IL	56	24	14	8	8	30	66	32	30
US40	NC	53	26	15	8	9	32	62	34	32
US42	TN	53	25	14	8	9	31	62	33	31
US44	SC	54	26	14	8	10	32	62	34	32
US45	GA	54	25	14	8	9	31	64	33	31
US47	AL	54	24	14	8	8	30	63	32	30
US48	MS	54	24	14	8	8	30	63	32	30
US49	FL-N	56	26	16	8	8	32	65	34	32
US496	FL-S	52	26	16	8	8	32	65	34	32
US50	MN	53	23	14	8	7	29	62	31	29
US51	ND	52	25	14	8	9	31	61	33	31
US52	SD	50	24	14	8	10	32	61	34	30
US53	IA	56	23	14	8	7	29	62	31	29
US55	ME	49	23	16	8	5	29	61	31	29
US56	MO	55	23	14	8	7	29	64	31	29
US58	KS	51	22	12	8	8	28	64	30	28
US60	AR	54	24	14	8	8	30	63	32	30
US62	OK	51	22	12	8	8	28	64	30	28
US64	LA	54	24	14	8	8	30	63	32	30
US66	TX - N	51	22	12	8	8	28	63	30	28
US68	TX - S	51	22	12	8	8	28	63	30	28
US70	MT	50	23	12	8	9	29	59	31	29
US72	WY	46	20	11	8	7	26	55	28	26
US74	CO	46	20	11	8	7	26	55	28	26
US76	UT	45	19	11	8	6	25	54	27	25
US77	NM	46	20	12	8	6	26	58	28	26
US79	AZ	45	19	11	8	6	25	57	27	25
US83	ID	49	19	11	8	6	25	58	27	25
US84	WA	48	19	11	8	6	25	57	27	25
US85	OR	48	19	11	8	6	25	57	27	25
US86	NV	45	19	11	8	6	25	57	27	25
US87	CA - N	44	18	10	8	6	24	53	26	24
US88	CA - S	44	18	10	8	6	24	56	26	24
US89	HI						30			

BETWEEN GR29										
AND		7	8	J1	J2	J3	TOT	DPM MTMC SUR	DPM AMC AIR	DPM COM AIR
US11	ME	60						69	28	26
US12	NH	60						69	28	26
US13	VT	60						65	28	25
US14	MA	60						68	28	25
USIS	RI	60						68	27	25
US16	CT	60						68	27	25
US17	NY	60						68	27	25
US19	NJ	60						68	27	25
US20	PA	60						68	27	25
US22	DE	60						68	27	25
US23	MD	60						68	27	25
US24	DC	60						68	27	25
US25	VA	60						65	27	26
US27	WV	60						65	27	26
US28	KY	60						65	29	26
US30	MI	60						69	28	26
US32	WI	60						69	28	26
US34	OH	60						69	28	26
US36	IN	60						69	29	26
US38	IL	60						70	28	27
US40	NC	60						65	27	26
US42	TN	60						65	28	26
US44	SC	60						65	27	26
US45	GA	60						66	28	26
US47	AL	60						66	29	27
US48	MS	60						66	29	27
US49	FL-N	59						66	28	27
US496	FL-S	59						66	28	27
US50	MN	60						70	31	29
US51	ND	60						75	34	32
US52	SD	60						74	33	26
US53	IA	60						72	31	27
US55	ME	60						73	31	30
US56	MO	60						67	29	27
US58	KS	60						67	31	29
US60	AR	60						67	29	29
US62	OK	60						69	32	29
US64	LA	60						67	29	29
US66	TX - N	60						69	28	29
US68	TX - S	60						69	28	29
US70	MT	60						76	35	33
US72	WY	60						74	33	31
US74	CO	57						70	32	31
US76	UT	60						71	33	31
US77	NM	60						70	33	30
US79	AZ	60						71	34	31
US83	ID	60						76	35	31
US84	WA	60						76	35	33
US85	OR	60						76	35	33
US86	NV	60						72	34	32
US87	CA - N	60						73	35	33
US88	CA - S	60						73	35	33
US89	HI									

BETWEEN IC										
AND		7	8	J1	J2	J3	TOT	DPM MTMC SUR	DPM AMC AIR	DPM COM AIR
US11	ME							49	27	25
US12	NH							49	27	25
US13	VT							49	27	24
US14	MA							49	27	24
USIS	RI							49	27	24
US16	CT							49	27	24
US17	NY							49	27	24
US19	NJ							48	26	24
US20	PA							48	26	24
US22	DE							48	26	24
US23	MD							48	26	24
US24	DC							48	26	24
US25	VA							48	26	25
US27	WV							48	27	25
US28	KY							48	26	25
US30	MI							49	27	25
US32	WI							49	27	25
US34	OH							48	26	25
US36	IN							49	27	25
US38	IL							49	27	26
US40	NC							48	26	25
US42	TN							48	26	25
US44	SC							48	26	25
US45	GA							49	27	25
US47	AL							49	27	26
US48	MS							49	27	26
US49	FL-N							49	27	26
US496	FL-S							49	27	26
US50	MN							50	28	28
US51	ND							52	30	31
US52	SD							52	30	25
US53	IA							50	28	26
US55	ME							52	30	29
US56	MO							50	28	26
US58	KS							50	28	28
US60	AR							50	28	28
US62	OK							52	30	28
US64	LA							50	28	28
US66	TX - N							52	30	28
US68	TX - S							52	30	28
US70	MT							54	32	32
US72	WY							53	31	30
US74	CO							53	31	30
US76	UT							54	32	30
US77	NM							53	31	29
US79	AZ							54	32	30
US83	ID							54	32	30
US84	WA							56	34	32
US85	OR							56	34	32
US86	NV							55	33	31
US87	CA - N							56	34	32
US88	CA - S							56	34	32
US89	HI									

BETWEEN IT										
AND		7	8	J1	J2	J3	TOT	DPM MTMC SUR	DPM AMC AIR	DPM COM AIR
US11	ME	51	25	11	8	12	31	60	30	28
US12	NH	51	25	10	8	13	31	60	30	28
US13	VT	51	24	11	8	12	31	59	30	27
US14	MA	51	24	10	8	13	31	59	30	27
USIS	RI	50	24	10	8	12	30	59	29	27
US16	CT	50	24	10	8	12	30	59	29	27
US17	NY	50	24	10	8	12	30	59	29	27
US19	NJ	50	24	10	8	12	30	59	29	27
US20	PA	50	24	10	8	12	30	59	29	27
US22	DE	50	24	9	8	13	30	59	29	27
US23	MD	50	24	10	8	12	30	59	29	27
US24	DC	50	24	10	8	12	30	59	29	27
US25	VA	50	25	10	8	12	30	62	29	28
US27	WV	50	25	10	8	12	30	62	29	28
US28	KY	51	25	11	8	13	32	62	31	28
US30	MI	51	25	11	8	12	31	60	30	28
US32	WI	51	25	11	8	12	31	60	30	28
US34	OH	50	25	11	8	12	31	60	30	28
US36	IN	51	25	12	8	12	32	60	31	28
US38	IL	51	26	11	8	12	31	61	30	29
US40	NC	49	25	10	8	12	30	62	29	28
US42	TN	47	25	11	8	12	31	62	30	28
US44	SC	47	25	10	8	12	30	62	29	28
US45	GA	47	25	11	8	12	31	63	30	28
US47	AL	53	26	12	8	12	32	63	31	29
US48	MS	53	26	12	8	12	32	63	31	29
US49	FL-N	47	26	11	8	12	31	63	30	29
US496	FL-S	47	26	11	8	12	31	63	30	29
US50	MN	56	28	12	8	14	34	61	33	31
US51	ND	56	31	14	8	15	37	66	36	34
US52	SD	56	25	13	8	15	36	65	35	28
US53	IA	55	26	12	8	14	34	63	33	29
US55	ME	55	29	11	8	15	34	64	33	32
US56	MO	60	26	12	8	12	32	64	31	29
US58	KS	54	28	13	8	13	34	64	33	31
US60	AR	53	28	12	8	12	32	64	31	31
US62	OK	54	28	13	8	14	35	66	34	31
US64	LA	53	28	12	8	12	32	64	31	31
US66	TX - N	54	28	13	8	10	31	66	30	31
US68	TX - S	54	28	13	8	10	31	66	30	31
US70	MT	58	32	14	8	16	38	67	37	35
US72	WY	56	30	14	8	14	36	65	35	33
US74	CO	55	30	14	8	13	25	67	34	33
US76	UT	56	30	14	8	14	36	68	35	33
US77	NM	54	29	14	8	14	36	67	35	32
US79	AZ	55	30	14	8	14	37	68	36	33
US83	ID	58	30	14	8	16	38	67	37	33
US84	WA	58	32	16	8	14	38	67	37	35
US85	OR	59	32	16	8	14	38	67	37	35
US86	NV	56	31	15	8	12	35	69	36	34
US87	CA - N	55	32	16	8	14	38	70	37	35
US88	CA - S	55	32	16	8	14	38	70	37	35
US89	HI						50			

BETWEEN IT10										
AND		**7**	**8**	**J1**	**J2**	**J3**	**TOT**	**DPM MTMC SUR**	**DPM AMC AIR**	**DPM COM AIR**
US11	ME	50	24	11	8	11	30	63	30	28
US12	NH	50	24	10	8	12	30	63	30	28
US13	VT	59	23	11	8	11	30	62	30	27
US14	MA	50	23	10	8	12	30	62	30	27
USIS	RI	50	24	10	8	12	30	62	30	27
US16	CT	49	23	10	8	12	30	62	30	27
US17	NY	49	23	10	8	12	30	62	30	27
US19	NJ	49	23	10	8	11	29	62	29	27
US20	PA	49	23	10	8	11	29	62	29	27
US22	DE	49	23	9	8	12	29	62	29	27
US23	MD	49	23	10	8	11	29	62	29	27
US24	DC	49	23	10	8	11	29	62	29	27
US25	VA	49	24	10	8	10	29	65	29	28
US27	WV	49	24	10	8	11	30	65	30	28
US28	KY	50	24	11	8	10	29	65	29	28
US30	MI	50	24	11	8	11	30	63	30	28
US32	WI	59	24	11	8	11	30	63	30	28
US34	OH	49	24	11	8	10	29	63	29	28
US36	IN	50	24	12	8	10	30	63	30	28
US38	IL	50	25	11	8	11	30	64	30	29
US40	NC	48	24	10	8	11	29	65	29	28
US42	TN	46	24	11	8	10	29	65	29	28
US44	SC	46	24	10	8	11	29	65	29	28
US45	GA	46	24	11	8	11	30	66	30	28
US47	AL	52	25	12	8	10	30	66	30	29
US48	MS	52	25	12	8	10	30	66	30	29
US49	FL-N	46	25	11	8	11	30	66	30	29
US496	FL-S	46	25	11	8	11	30	66	30	29
US50	MN	55	27	12	8	11	31	64	31	31
US51	ND	55	30	14	8	11	33	69	33	34
US52	SD	55	24	13	8	12	33	68	33	28
US53	IA	53	25	12	8	11	31	66	31	29
US55	ME	54	28	11	8	14	33	67	33	32
US56	MO	53	25	12	8	11	31	67	31	29
US58	KS	53	27	13	8	10	31	67	31	31
US60	AR	52	27	12	8	11	31	67	31	31
US62	OK	53	27	13	8	12	33	69	33	31
US64	LA	52	27	12	8	11	31	67	31	31
US66	TX - N	53	27	13	8	12	33	69	33	31
US68	TX - S	53	27	13	8	12	33	69	33	31
US70	MT	57	31	14	8	13	35	70	35	35
US72	WY	55	29	14	8	12	34	68	34	33
US74	CO	54	29	14	8	12	34	70	34	33
US76	UT	55	29	14	8	13	35	71	35	33
US77	NM	53	28	14	8	12	34	70	34	32
US79	AZ	54	29	14	8	13	35	71	35	33
US83	ID	57	29	14	8	13	35	70	35	33
US84	WA	57	31	16	8	13	37	70	37	35
US85	OR	58	31	16	8	13	37	70	37	35
US86	NV	55	30	15	8	13	36	72	36	34
US87	CA - N	54	31	16	8	13	37	73	37	35
US88	CA - S	54	31	16	8	13	37	73	37	35
US89	HI						49			

BETWEEN IT20										
AND		7	8	J1	J2	J3	TOT	DPM MTMC SUR	DPM AMC AIR	DPM COM AIR
US11	ME	60	26					63	30	28
US12	NH	60	26					63	30	28
US13	VT	60	25					62	30	27
US14	MA	60	25					62	30	27
USIS	RI	60	25					62	30	27
US16	CT	60	25					62	30	27
US17	NY	60	25					62	30	27
US19	NJ	60	25					62	29	27
US20	PA	60	25					62	29	27
US22	DE	60	25					62	29	27
US23	MD	60	25					62	29	27
US24	DC	60	25					62	29	27
US25	VA	60	26					69	29	28
US27	WV	60	26					69	30	28
US28	KY	60	26					69	29	28
US30	MI	60	26					63	30	28
US32	WI	60	26					63	30	28
US34	OH	60	26					63	29	28
US36	IN	60	26					63	30	28
US38	IL	60	27					64	30	29
US40	NC	60	26					69	29	28
US42	TN	60	26					69	29	28
US44	SC	60	26					69	29	28
US45	GA	60	26					70	30	28
US47	AL	60	27					70	30	29
US48	MS	60	27					70	30	29
US49	FL-N	60	27					70	30	29
US496	FL-S	60	27					70	30	29
US50	MN	60	29					64	31	31
US51	ND	60	32					69	33	34
US52	SD	60	26					68	33	28
US53	IA	60	27					66	31	29
US55	ME	60	30					67	33	32
US56	MO	60	27					71	31	29
US58	KS	60	29					71	31	31
US60	AR	60	29					71	31	31
US62	OK	60	29					73	33	31
US64	LA	60	29					71	31	31
US66	TX - N	60	29					73	33	31
US68	TX - S	60	29					73	33	31
US70	MT	60	33					70	35	35
US72	WY	60	31					68	34	33
US74	CO	60	31					74	34	33
US76	UT	60	31					75	35	33
US77	NM	60	30					74	34	32
US79	AZ	60	31					75	35	33
US83	ID	60	31					70	35	33
US84	WA	60	33					70	37	35
US85	OR	60	33					70	37	35
US86	NV	60	32					76	36	34
US87	CA - N	60	33					77	37	35
US88	CA - S	60	33					77	37	35
US89	HI									

BETWEEN JA01										
AND		7	8	J1	J2	J3	TOT	DPM MTMC SUR	DPM AMC AIR	DPM COM AIR
US11	ME	53	32	16	8	14	38	62	35	33
US12	NH	53	32	16	8	14	38	62	35	33
US13	VT	53	43	16	8	14	38	61	35	33
US14	MA	53	32	16	8	14	38	61	35	33
USIS	RI	52	32	15	8	15	38	61	35	33
US16	CT	52	32	16	8	11	35	61	35	33
US17	NY	52	32	15	8	12	35	61	35	33
US19	NJ	52	32	16	8	11	30	61	35	33
US20	PA	52	32	14	8	12	38	61	35	33
US22	DE	52	32	16	8	11	35	61	35	33
US23	MD	52	32	16	8	14	38	61	35	33
US24	DC	52	32	16	8	14	38	61	35	33
US25	VA	52	32	16	8	14	38	63	35	33
US27	WV	52	32	14	8	16	38	63	35	33
US28	KY	53	31	14	8	15	37	63	34	32
US30	MI	53	31	14	8	15	37	62	34	32
US32	WI	53	30	14	8	15	36	62	33	31
US34	OH	52	31	14	8	15	37	62	34	32
US36	IN	53	30	14	8	14	36	62	33	31
US38	IL	53	30	14	8	14	36	63	33	31
US40	NC	45	32	15	8	12	35	63	35	33
US42	TN	56	31	14	8	9	31	63	34	32
US44	SC	55	32	14	8	13	35	63	35	33
US45	GA	55	31	14	8	13	35	63	34	32
US47	AL	52	30	14	8	13	35	62	33	31
US48	MS	53	30	14	8	13	35	62	33	31
US49	FL-N	54	32	16	8	11	35	64	35	33
US496	FL-S	53	32	16	8	11	35	64	35	33
US50	MN	54	29	16	8	11	35	56	32	30
US51	ND	48	31	16	8	13	37	55	34	32
US52	SD	55	30	16	8	14	38	55	35	31
US53	IA	58	29	14	8	13	35	56	32	30
US55	ME	52	29	16	8	6	30	55	32	30
US56	MO	53	29	14	8	9	31	63	32	30
US58	KS	51	28	12	8	14	34	63	31	29
US60	AR	52	30	14	8	14	36	62	33	31
US62	OK	51	28	12	8	14	34	63	31	29
US64	LA	52	30	14	8	14	36	62	33	31
US66	TX - N	51	28	12	8	14	34	62	31	29
US68	TX - S	51	28	12	8	10	30	62	31	29
US70	MT	46	29	12	8	13	35	53	32	30
US72	WY	51	26	11	8	13	32	55	29	27
US74	CO	51	26	11	8	13	32	55	29	27
US76	UT	50	25	11	8	11	30	54	28	26
US77	NM	51	26	12	8	12	32	56	29	27
US79	AZ	50	25	11	8	12	31	55	28	26
US83	ID	45	25	11	8	6	25	52	28	26
US84	WA	44	25	11	8	11	30	51	28	26
US85	OR	44	25	11	8	12	31	51	28	26
US86	NV	50	25	11	8	12	31	55	28	26
US87	CA - N	47	24	10	8	12	30	53	27	25
US88	CA - S	49	24	10	8	12	30	54	27	25
US89	HI						37			

BETWEEN JA02										
AND		7	8	J1	J2	J3	TOT	DPM MTMC SUR	DPM AMC AIR	DPM COM AIR
US11	ME	56	35	16	8	17	41	66	40	38
US12	NH	56	35	16	8	17	41	66	40	38
US13	VT	56	35	16	8	17	41	65	40	38
US14	MA	56	35	16	8	17	41	65	40	38
USIS	RI	55	35	15	8	18	41	65	40	38
US16	CT	55	35	16	8	17	41	65	40	38
US17	NY	55	35	15	8	18	41	65	40	38
US19	NJ	55	35	16	8	17	41	65	40	38
US20	PA	55	35	14	8	19	41	65	40	38
US22	DE	55	35	16	8	17	41	65	40	38
US23	MD	55	35	16	8	17	41	65	40	38
US24	DC	55	35	16	8	17	41	65	40	38
US25	VA	55	35	16	8	17	41	67	40	38
US27	WV	55	35	14	8	19	41	67	40	38
US28	KY	56	34	14	8	18	40	67	39	37
US30	MI	56	34	14	8	18	40	66	39	37
US32	WI	56	33	14	8	13	35	66	38	36
US34	OH	55	34	14	8	18	40	66	39	37
US36	IN	56	33	14	8	17	39	66	38	36
US38	IL	56	33	14	8	17	39	67	38	36
US40	NC	55	35	15	8	17	40	67	40	38
US42	TN	59	34	14	8	19	41	67	39	37
US44	SC	58	35	14	8	18	40	67	40	38
US45	GA	58	34	14	8	18	40	67	39	37
US47	AL	55	33	14	8	18	39	66	38	36
US48	MS	55	33	14	8	17	39	66	38	36
US49	FL-N	56	35	16	8	11	35	68	40	38
US496	FL-S	57	32	16	8	14	38	68	40	38
US50	MN	51	34	14	8	18	40	60	37	35
US51	ND	58	33	14	8	18	41	59	39	37
US52	SD	55	32	14	8	16	38	59	40	36
US53	IA	55	32	14	8	16	38	60	37	35
US55	ME	55	32	16	8	11	30	59	37	35
US56	MO	56	32	14	8	16	38	67	37	35
US58	KS	54	31	12	8	17	37	67	36	34
US60	AR	55	33	14	8	17	39	66	38	36
US62	OK	54	31	12	8	15	35	67	36	34
US64	LA	55	33	14	8	13	35	66	38	36
US66	TX - N	54	31	12	8	15	35	66	36	34
US68	TX - S	54	31	12	8	17	37	66	36	34
US70	MT	49	32	12	8	18	38	57	37	35
US72	WY	54	29	11	8	16	35	59	34	32
US74	CO	54	29	11	8	16	35	59	34	32
US76	UT	53	28	11	8	15	34	58	33	31
US77	NM	54	29	12	8	15	35	60	34	32
US79	AZ	53	28	11	8	15	34	59	33	31
US83	ID	48	28	11	8	15	34	56	33	31
US84	WA	47	28	11	8	15	34	55	33	31
US85	OR	47	28	11	8	15	34	55	33	31
US86	NV	53	28	11	8	15	34	59	33	31
US87	CA - N	50	27	10	8	15	33	57	32	30
US88	CA - S	52	27	10	8	15	33	58	32	30
US89	HI						39			

BETWEEN JA03										
AND		7	8	J1	J2	J3	TOT	DPM MTMC SUR	DPM AMC AIR	DPM COM AIR
US11	ME	56	35	16	8	17	41	66	40	38
US12	NH	56	35	16	8	17	41	66	40	38
US13	VT	56	35	16	8	17	41	65	40	38
US14	MA	56	35	16	8	18	42	65	40	38
USIS	RI	55	35	15	8	18	41	65	40	38
US16	CT	55	35	16	8	17	41	65	40	38
US17	NY	55	35	15	8	18	41	65	40	38
US19	NJ	55	35	16	8	17	41	65	40	38
US20	PA	55	35	14	8	19	41	65	40	38
US22	DE	55	35	16	8	17	41	65	40	38
US23	MD	55	35	16	8	17	41	65	40	38
US24	DC	55	35	16	8	17	41	65	40	38
US25	VA	55	35	16	8	17	41	67	40	38
US27	WV	55	35	14	8	19	41	67	40	38
US28	KY	56	34	14	8	18	40	67	39	37
US30	MI	56	34	14	8	18	40	66	39	37
US32	WI	56	33	14	8	17	39	66	38	36
US34	OH	55	34	14	8	18	40	66	39	37
US36	IN	56	33	14	8	17	39	66	38	36
US38	IL	56	33	14	8	17	39	67	38	36
US40	NC	59	35	15	8	17	40	67	40	38
US42	TN	59	34	14	8	19	40	67	39	37
US44	SC	58	35	14	8	18	40	67	40	38
US45	GA	58	34	14	8	18	40	67	39	37
US47	AL	55	33	14	8	17	39	66	38	36
US48	MS	55	33	14	8	17	39	66	38	36
US49	FL-N	57	35	16	8	11	35	68	40	38
US496	FL-S	56	35	16	8	17	41	68	40	38
US50	MN	57	32	14	8	16	38	60	37	35
US51	ND	51	34	14	8	18	40	59	39	37
US52	SD	58	33	14	8	19	41	59	40	36
US53	IA	55	32	14	8	16	38	60	37	35
US55	ME	55	32	16	8	14	38	59	37	35
US56	MO	56	32	14	8	16	38	67	37	35
US58	KS	54	31	12	8	17	37	67	36	34
US60	AR	55	33	14	8	17	39	66	38	36
US62	OK	54	31	12	8	15	35	67	36	34
US64	LA	55	33	14	8	17	39	66	38	36
US66	TX - N	54	31	12	8	17	37	66	36	34
US68	TX - S	54	31	12	8	15	35	66	36	34
US70	MT	49	32	12	8	18	38	57	37	35
US72	WY	54	29	11	8	16	35	59	34	32
US74	CO	54	29	11	8	16	35	59	34	32
US76	UT	53	28	11	8	15	34	58	33	31
US77	NM	54	29	12	8	15	35	60	34	32
US79	AZ	53	28	11	8	15	34	59	33	31
US83	ID	48	28	11	8	15	34	56	33	31
US84	WA	47	28	11	8	15	34	55	33	31
US85	OR	47	28	11	8	15	34	55	33	31
US86	NV	53	28	11	8	15	34	59	33	31
US87	CA - N	50	27	10	8	15	33	57	32	30
US88	CA - S	52	27	10	8	15	33	58	32	30
US89	HI						39			

BETWEEN JA96										
AND		7	8	J1	J2	J3	TOT	DPM MTMC SUR	DPM AMC AIR	DPM COM AIR
US11	ME	60	26	16	8	11	35	65	35	33
US12	NH	60	26	16	8	11	35	65	35	33
US13	VT	60	26	16	8	11	35	64	35	33
US14	MA	60	26	16	8	11	35	64	35	33
USIS	RI	59	26	15	8	12	35	64	35	33
US16	CT	55	35	16	8	11	35	64	35	33
US17	NY	59	26	15	8	12	35	64	35	33
US19	NJ	59	26	16	8	11	35	64	35	33
US20	PA	59	26	14	8	13	35	64	35	33
US22	DE	59	26	16	8	11	35	64	35	33
US23	MD	59	26	16	8	11	35	64	35	33
US24	DC	59	26	16	8	11	35	64	35	33
US25	VA	59	26	16	8	11	35	68	35	33
US27	WV	60	29	14	8	14	36	68	35	33
US28	KY	60	25	14	8	12	34	68	34	32
US30	MI	60	25	14	8	12	34	65	34	32
US32	WI	60	24	14	8	11	33	65	33	31
US34	OH	59	25	14	8	12	34	65	34	32
US36	IN	60	24	14	8	11	33	65	33	31
US38	IL	60	24	14	8	11	33	66	33	31
US40	NC	55	26	15	8	12	35	68	35	33
US42	TN	60	25	14	8	12	34	68	34	32
US44	SC	60	26	14	8	13	35	68	35	33
US45	GA	60	25	14	8	12	34	65	34	32
US47	AL	59	24	14	8	11	33	64	33	31
US48	MS	59	24	14	8	8	30	64	33	31
US49	FL-N	60	26	16	8	11	35	66	35	33
US496	FL-S	60	26	16	8	11	35	66	35	33
US50	MN	58	23	14	8	10	32	62	32	30
US51	ND	56	25	14	8	12	34	61	34	32
US52	SD	59	24	14	8	13	35	61	35	31
US53	IA	59	23	14	8	10	32	62	32	30
US55	ME	59	23	16	8	9	30	61	32	30
US56	MO	60	23	14	8	10	32	65	32	30
US58	KS	58	22	12	8	11	31	65	31	29
US60	AR	59	24	14	8	11	33	64	33	31
US62	OK	58	22	12	8	11	31	65	31	29
US64	LA	59	24	14	8	11	33	64	33	31
US66	TX - N	58	22	12	8	11	31	64	31	29
US68	TX - S	58	22	12	8	11	31	64	31	29
US70	MT	54	23	12	8	12	32	59	32	30
US72	WY	55	20	11	8	10	29	58	29	27
US74	CO	55	20	11	8	10	29	58	29	27
US76	UT	54	19	11	8	9	28	57	28	26
US77	NM	53	20	12	8	9	29	60	29	27
US79	AZ	54	19	11	8	9	28	59	28	26
US83	ID	53	19	11	8	9	28	58	28	26
US84	WA	52	19	11	8	9	28	57	28	26
US85	OR	52	19	11	8	9	28	57	28	26
US86	NV	54	19	11	8	9	25	59	28	26
US87	CA - N	51	18	10	8	9	27	56	27	25
US88	CA - S	53	18	10	8	9	27	58	27	25
US89	HI						31			

BETWEEN KS										
AND		7	8	J1	J2	J3	TOT	DPM MTMC SUR	DPM AMC AIR	DPM COM AIR
US11	ME	60	29	16	8	12	36	69	35	33
US12	NH	60	29	16	8	12	36	69	35	33
US13	VT	60	29	16	8	12	36	68	35	33
US14	MA	60	29	16	8	12	36	68	35	33
USIS	RI	60	29	15	8	13	36	68	35	33
US16	CT	60	29	16	8	12	36	68	35	33
US17	NY	60	29	15	8	13	36	68	35	33
US19	NJ	60	29	16	8	11	30	68	35	33
US20	PA	60	29	14	8	14	36	68	35	33
US22	DE	60	29	16	8	12	36	68	35	33
US23	MD	60	29	16	8	12	36	68	35	33
US24	DC	60	29	16	8	12	36	68	35	33
US25	VA	60	29	16	8	12	36	72	35	33
US27	WV	60	29	14	8	14	36	72	35	33
US28	KY	60	28	14	8	13	30	72	34	32
US30	MI	60	28	14	8	13	35	69	34	32
US32	WI	60	27	14	8	12	34	69	33	31
US34	OH	60	28	14	8	13	35	69	34	32
US36	IN	60	27	14	8	12	34	69	33	31
US38	IL	60	27	14	8	12	34	70	33	31
US40	NC	60	29	15	8	12	35	72	35	33
US42	TN	60	28	14	8	13	35	72	34	32
US44	SC	60	29	14	8	13	35	72	35	33
US45	GA	60	28	14	8	13	35	69	34	32
US47	AL	60	27	14	8	12	34	68	33	31
US48	MS	60	27	14	8	12	34	68	33	31
US49	FL-N	60	29	16	8	11	35	70	35	33
US496	FL-S	60	29	16	8	11	35	70	35	33
US50	MN	60	26	14	8	11	33	66	32	30
US51	ND	60	23	14	8	8	30	65	34	32
US52	SD	60	27	14	8	8	30	65	35	31
US53	IA	60	26	14	8	11	33	66	32	30
US55	ME	60	26	16	8	8	30	65	32	30
US56	MO	60	26	14	8	8	30	69	32	30
US58	KS	60	25	12	8	10	30	69	31	29
US60	AR	60	27	14	8	12	34	68	33	31
US62	OK	60	25	12	8	12	32	69	31	29
US64	LA	60	27	14	8	12	34	68	33	31
US66	TX - N	60	25	12	8	12	32	68	31	29
US68	TX - S	60	25	12	8	12	32	68	31	29
US70	MT	56	26	12	8	13	33	63	32	30
US72	WY	57	23	11	8	11	30	62	29	27
US74	CO	57	23	11	8	11	30	62	29	27
US76	UT	56	22	11	8	10	29	61	28	26
US77	NM	60	23	12	8	10	30	64	29	27
US79	AZ	56	22	11	8	10	29	63	28	26
US83	ID	55	22	11	8	10	29	62	28	26
US84	WA	54	22	11	8	10	29	61	28	26
US85	OR	54	22	11	8	10	29	61	28	26
US86	NV	56	22	11	8	10	29	63	28	26
US87	CA - N	55	21	10	8	10	28	60	27	25
US88	CA - S	55	21	10	8	10	28	62	27	25
US89	HI						31			

BETWEEN NL										
AND		7	8	J1	J2	J3	TOT	DPM MTMC SUR	DPM AMC AIR	DPM COM AIR
US11	ME	49	21	11	8	9	28	61	30	28
US12	NH	49	21	10	8	10	28	61	30	28
US13	VT	49	20	11	8	9	28	60	30	27
US14	MA	49	20	10	8	10	28	60	30	27
USIS	RI	48	20	10	8	9	27	60	29	27
US16	CT	48	20	10	8	9	27	60	29	27
US17	NY	48	20	10	8	9	27	60	29	27
US19	NJ	48	20	10	8	9	50	60	29	27
US20	PA	48	20	10	8	9	27	60	29	27
US22	DE	48	20	9	8	10	27	60	29	27
US23	MD	48	20	10	8	9	27	60	29	27
US24	DC	48	20	10	8	9	27	60	29	27
US25	VA	48	21	10	8	9	27	62	29	28
US27	WV	48	21	10	8	9	27	62	29	28
US28	KY	54	21	11	8	10	29	62	31	28
US30	MI	49	21	11	8	9	28	61	30	28
US32	WI	49	21	11	8	9	28	61	30	28
US34	OH	48	21	11	8	9	28	61	30	28
US36	IN	49	21	12	8	9	29	61	31	28
US38	IL	49	22	11	8	9	28	62	30	29
US40	NC	48	21	10	8	9	27	62	29	28
US42	TN	48	21	11	8	9	28	62	30	28
US44	SC	49	21	10	8	9	27	62	29	28
US45	GA	49	21	11	8	9	28	66	30	28
US47	AL	53	22	12	8	9	29	65	31	29
US48	MS	53	22	12	8	9	29	65	31	29
US49	FL-N	55	22	11	8	9	28	67	30	29
US496	FL-S	49	22	11	8	9	28	67	30	29
US50	MN	52	24	12	8	11	31	62	33	31
US51	ND	55	27	14	8	12	34	67	36	34
US52	SD	55	21	13	8	12	33	66	35	28
US53	IA	54	22	12	8	11	31	64	33	29
US55	ME	54	25	11	8	12	31	65	33	32
US56	MO	54	22	12	8	9	29	62	31	29
US58	KS	53	24	13	8	10	31	66	33	31
US60	AR	53	24	12	8	9	29	65	31	31
US62	OK	53	24	13	8	11	32	66	34	31
US64	LA	53	24	12	8	9	29	65	31	31
US66	TX - N	53	24	13	8	7	28	65	30	31
US68	TX - S	53	24	13	8	7	28	65	30	31
US70	MT	57	28	14	8	13	35	68	37	35
US72	WY	55	26	14	8	11	33	66	35	33
US74	CO	54	26	14	8	10	32	67	34	33
US76	UT	55	26	14	8	11	33	68	35	33
US77	NM	55	25	14	8	11	33	66	35	32
US79	AZ	54	26	14	8	12	34	68	36	33
US83	ID	56	26	14	8	13	35	68	37	33
US84	WA	55	28	16	8	11	35	68	37	35
US85	OR	55	28	16	8	11	35	68	37	35
US86	NV	55	27	15	8	11	34	68	36	34
US87	CA - N	54	28	16	8	11	35	67	37	35
US88	CA - S	54	28	16	8	11	35	67	37	35
US89	HI									

BETWEEN PO										
AND		7	8	J1	J2	J3	TOT	DPM MTMC SUR	DPM AMC AIR	DPM COM AIR
US11	ME	56	20					61	27	25
US12	NH	56	20					61	27	25
US13	VT	56	19					60	26	24
US14	MA	56	19					60	26	24
USIS	RI	55	19					60	26	24
US16	CT	55	19					60	26	24
US17	NY	55	19					60	26	24
US19	NJ	55	19					60	26	24
US20	PA	55	19					60	26	24
US22	DE	55	19					60	26	24
US23	MD	55	19					60	26	24
US24	DC	55	19					60	26	24
US25	VA	55	20					60	26	25
US27	WV	55	20					60	26	25
US28	KY	56	20					61	27	25
US30	MI	56	20					61	27	25
US32	WI	56	20					61	27	25
US34	OH	55	20					61	27	25
US36	IN	56	20					61	27	25
US38	IL	56	21					62	28	26
US40	NC	50	20					61	27	25
US42	TN	52	20					61	27	25
US44	SC	52	25					61	27	25
US45	GA	52	20					61	27	25
US47	AL	58	21					62	28	26
US48	MS	58	21					62	28	26
US49	FL-N	60	21					62	28	26
US496	FL-S	52	21					62	28	26
US50	MN	58	23					62	28	28
US51	ND	56	26					67	33	31
US52	SD	56	20					66	32	25
US53	IA	55	21					64	30	26
US55	ME	55	24					65	31	29
US56	MO	59	21					62	28	26
US58	KS	54	23					64	30	28
US60	AR	58	23					64	30	28
US62	OK	54	23					62	28	28
US64	LA	58	23					64	30	28
US66	TX - N	54	23					64	30	28
US68	TX - S	54	23					64	30	28
US70	MT	58	27					68	34	32
US72	WY	56	25					66	32	30
US74	CO	55	25					66	32	30
US76	UT	56	25					66	32	30
US77	NM	54	24					66	32	29
US79	AZ	55	25					67	33	30
US83	ID	58	25					68	34	30
US84	WA	58	27					68	34	32
US85	OR	59	27					68	34	32
US86	NV	56	26					67	33	31
US87	CA - N	59	27					68	34	32
US88	CA - S	59	27					68	34	32
US89	HI									

BETWEEN PO01										
AND		7	8	J1	J2	J3	TOT	DPM MTMC SUR	DPM AMC AIR	DPM COM AIR
US11	ME	49	20	11	8	10	29	58	28	
US12	NH	49	20	10	8	11	29	58	28	
US13	VT	49	19	11	8	9	28	57	27	
US14	MA	49	19	10	8	10	28	57	27	
USIS	RI	48	19	10	8	10	28	57	27	
US16	CT	48	19	10	8	10	28	57	27	
US17	NY	48	19	10	8	10	28	57	27	
US19	NJ	48	19	10	8	10	28	57	27	
US20	PA	48	19	10	8	10	28	57	27	
US22	DE	48	19	9	8	11	28	57	27	
US23	MD	48	19	10	8	10	28	57	27	
US24	DC	48	19	10	8	10	28	57	27	
US25	VA	48	20	10	8	10	28	57	27	
US27	WV	48	20	10	8	10	28	57	27	
US28	KY	49	20	11	8	10	29	58	28	
US30	MI	49	20	11	8	10	29	58	28	
US32	WI	49	20	11	8	10	29	58	28	
US34	OH	48	20	11	8	10	29	58	28	
US36	IN	49	20	12	8	9	29	58	28	
US38	IL	49	21	11	8	11	30	59	29	
US40	NC	48	20	10	8	11	29	58	28	
US42	TN	48	20	11	8	10	29	58	28	
US44	SC	48	20	10	8	7	25	58	28	
US45	GA	48	20	11	8	10	29	58	28	
US47	AL	56	21	12	8	8	25	59	29	
US48	MS	56	21	12	8	10	30	59	29	
US49	FL-N	58	21	11	8	11	30	59	29	
US496	FL-S	48	21	11	8	11	30	59	29	
US50	MN	60	23	12	8	10	30	59	29	
US51	ND	58	26	14	8	13	35	64	34	
US52	SD	58	20	13	8	13	34	63	33	
US53	IA	57	21	12	8	12	32	61	31	
US55	ME	57	24	11	8	14	33	62	32	
US56	MO	57	21	12	8	8	25	59	29	
US58	KS	56	23	13	8	11	32	61	31	
US60	AR	56	23	12	8	12	32	61	31	
US62	OK	56	23	13	8	9	30	59	29	
US64	LA	56	23	12	8	12	32	61	31	
US66	TX - N	56	23	13	8	9	30	61	31	
US68	TX - S	56	23	13	8	9	30	61	31	
US70	MT	60	27	14	8	14	36	65	35	
US72	WY	58	25	14	8	12	34	63	33	
US74	CO	57	25	14	8	12	34	63	33	
US76	UT	58	25	14	8	12	34	63	33	
US77	NM	56	24	14	8	8	30	63	33	
US79	AZ	57	25	14	8	8	30	64	34	
US83	ID	60	25	14	8	14	36	65	35	
US84	WA	60	27	16	8	12	36	65	35	
US85	OR	60	27	16	8	12	36	65	35	
US86	NV	58	26	15	8	8	31	64	34	
US87	CA - N	58	27	16	8	12	36	65	35	
US88	CA - S	58	27	16	8	12	30	65	35	
US89	HI									

BETWEEN RQ										
AND		7	8	J1	J2	J3	TOT	DPM MTMC SUR	DPM AMC AIR	DPM COM AIR
US11	ME	37	23					45	28	29
US12	NH	37	23					45	28	29
US13	VT	37	23					44	28	29
US14	MA	37	23					44	28	29
USIS	RI	36	23					44	28	29
US16	CT	36	21					44	28	27
US17	NY	36	21					44	28	27
US19	NJ	36	21					44	27	27
US20	PA	36	21					44	27	27
US22	DE	36	20					44	27	26
US23	MD	36	20					44	27	26
US24	DC	36	20					44	27	26
US25	VA	36	20					44	27	26
US27	WV	36	20					44	28	26
US28	KY	34	20					45	27	26
US30	MI	37	21					45	28	27
US32	WI	37	21					45	28	27
US34	OH	36	21					45	27	27
US36	IN	37	21					45	28	27
US38	IL	37	21					44	28	27
US40	NC	34	20					45	27	26
US42	TN	34	20					43	27	26
US44	SC	34	19					44	27	25
US45	GA	34	19					44	28	25
US47	AL	37	20					43	28	26
US48	MS	37	20					43	28	26
US49	FL-N	39	19					45	28	25
US496	FL-S	34	19					45	28	25
US50	MN	40	23					45	29	29
US51	ND	39	26					49	31	32
US52	SD	39	26					48	31	32
US53	IA	40	23					45	29	29
US55	ME	38	23					45	31	29
US56	MO	38	21					44	29	27
US58	KS	37	23					44	29	29
US60	AR	37	20					43	29	26
US62	OK	37	23					44	31	29
US64	LA	37	21					43	29	27
US66	TX - N	37	21					43	31	27
US68	TX - S	37	21					43	31	27
US70	MT	41	27					50	33	33
US72	WY	39	25					47	32	31
US74	CO	38	24					45	32	30
US76	UT	39	25					47	33	31
US77	NM	37	24					44	32	30
US79	AZ	38	25					47	33	31
US83	ID	41	27					48	33	33
US84	WA	42	27					49	35	33
US85	OR	42	27					49	35	33
US86	NV	39	26					48	34	32
US87	CA - N	41	27					49	35	33
US88	CA - S	41	27					49	35	33
US89	HI									

BETWEEN SP										
AND		7	8	J1	J2	J3	TOT	DPM MTMC SUR	DPM AMC AIR	DPM COM AIR
US11	ME	55	22	11	10	9	30	67	30	28
US12	NH	55	22	10	10	10	30	67	30	28
US13	VT	55	21	11	10	9	30	66	30	27
US14	MA	55	21	10	10	10	30	66	30	27
USIS	RI	54	21	10	10	9	29	66	29	27
US16	CT	54	21	10	10	7	27	66	29	27
US17	NY	54	21	10	10	9	29	66	29	27
US19	NJ	54	21	10	10	9	29	66	29	27
US20	PA	54	21	10	10	9	29	66	29	27
US22	DE	54	21	9	10	10	29	66	29	27
US23	MD	54	21	10	10	9	29	66	29	27
US24	DC	54	21	10	10	9	29	66	29	27
US25	VA	54	22	10	10	9	29	68	29	28
US27	WV	54	22	10	10	9	29	68	29	28
US28	KY	55	22	11	10	10	31	68	31	28
US30	MI	55	22	11	10	9	30	67	30	28
US32	WI	55	22	11	10	9	30	67	30	28
US34	OH	54	22	11	10	9	30	67	30	28
US36	IN	67	55	12	10	9	31	67	31	28
US38	IL	55	23	11	10	9	30	68	30	29
US40	NC	54	22	10	10	9	29	68	29	28
US42	TN	55	22	11	10	9	30	68	30	28
US44	SC	54	22	10	10	9	29	68	29	28
US45	GA	55	22	11	10	9	30	69	30	28
US47	AL	54	23	12	10	8	30	69	31	29
US48	MS	54	23	12	10	9	31	69	31	29
US49	FL-N	56	23	11	10	9	30	69	30	29
US496	FL-S	55	23	11	10	9	30	69	30	29
US50	MN	58	25	12	10	11	33	68	33	31
US51	ND	58	28	14	10	12	36	73	36	34
US52	SD	58	22	13	10	12	35	72	35	28
US53	IA	57	23	12	10	11	33	70	33	29
US55	ME	57	26	11	10	9	30	71	33	32
US56	MO	55	23	12	10	9	31	70	31	29
US58	KS	56	25	13	10	10	33	70	33	31
US60	AR	54	25	12	10	9	31	70	31	31
US62	OK	56	25	13	10	11	34	72	34	31
US64	LA	54	25	12	10	9	31	70	31	31
US66	TX - N	56	25	13	10	7	30	72	30	31
US68	TX - S	56	25	13	10	7	30	72	30	31
US70	MT	60	29	14	10	13	37	74	37	35
US72	WY	58	27	14	10	11	35	72	35	33
US74	CO	57	27	14	10	10	34	73	34	33
US76	UT	58	27	14	10	11	35	74	35	33
US77	NM	56	26	14	10	11	35	73	35	32
US79	AZ	57	27	14	10	12	36	74	36	33
US83	ID	57	27	14	10	13	37	74	37	33
US84	WA	62	29	16	10	11	37	74	37	35
US85	OR	63	29	16	10	11	37	74	37	35
US86	NV	58	28	15	10	11	36	75	36	34
US87	CA - N	60	29	16	10	11	37	76	37	35
US88	CA - S	60	29	16	10	9	35	76	37	35
US89	HI						45			

BETWEEN TU										
AND		7	8	J1	J2	J3	TOT	DPM MTMC SUR	DPM AMC AIR	DPM COM AIR
US11	ME	60	24	11	10	11	32	67	30	28
US12	NH	60	24	10	10	12	32	67	30	28
US13	VT	60	23	11	10	11	32	66	30	27
US14	MA	60	23	10	10	12	32	66	30	27
USIS	RI	60	23	10	10	11	31	66	29	27
US16	CT	60	23	10	10	11	31	66	29	27
US17	NY	60	23	10	10	11	31	66	29	27
US19	NJ	60	23	10	10	11	31	66	29	27
US20	PA	60	23	10	10	11	31	66	29	27
US22	DE	60	23	9	10	12	31	66	29	27
US23	MD	60	23	10	10	11	31	66	29	27
US24	DC	60	23	10	10	11	31	66	29	27
US25	VA	60	24	10	10	11	31	66	29	28
US27	WV	60	24	10	10	11	31	66	29	28
US28	KY	60	24	11	10	12	33	67	31	28
US30	MI	60	24	11	10	11	32	67	30	28
US32	WI	60	24	11	10	11	32	67	30	28
US34	OH	60	24	11	10	11	32	67	30	28
US36	IN	60	24	12	10	11	33	67	31	28
US38	IL	60	25	11	10	11	32	68	30	29
US40	NC	60	24	10	10	11	31	67	29	28
US42	TN	60	24	11	10	11	32	67	30	28
US44	SC	60	24	10	10	11	31	67	29	28
US45	GA	60	24	11	10	11	32	67	30	28
US47	AL	60	25	12	10	11	33	68	31	29
US48	MS	60	25	12	10	11	33	68	31	29
US49	FL-N	60	25	11	10	11	32	68	30	29
US496	FL-S	60	25	11	10	11	32	68	30	29
US50	MN	60	27	12	10	13	35	68	33	31
US51	ND	60	30	14	10	14	38	73	36	34
US52	SD	60	24	13	10	14	37	72	35	28
US53	IA	60	25	12	10	13	35	70	33	29
US55	ME	60	28	11	10	14	35	71	33	32
US56	MO	60	25	12	10	11	33	71	31	29
US58	KS	60	27	13	10	12	35	70	33	31
US60	AR	60	27	12	10	11	33	70	31	31
US62	OK	60	27	13	10	13	36	68	34	31
US64	LA	60	27	12	10	11	33	70	31	31
US66	TX - N	60	27	13	10	9	32	70	30	31
US68	TX - S	60	27	13	10	9	32	70	30	31
US70	MT	60	31	14	10	15	39	74	37	35
US72	WY	60	29	14	10	13	37	72	35	33
US74	CO	60	29	14	10	12	36	72	34	33
US76	UT	60	29	14	10	13	37	72	35	33
US77	NM	60	28	14	10	13	37	72	35	32
US79	AZ	60	29	14	10	14	38	73	36	33
US83	ID	60	29	14	10	15	39	74	37	33
US84	WA	60	31	16	10	13	39	74	37	35
US85	OR	60	31	16	10	13	39	74	37	35
US86	NV	60	30	15	10	13	38	73	36	34
US87	CA - N	60	31	16	10	13	39	74	37	35
US88	CA - S	60	31	16	10	13	39	74	37	35
US89	HI						56			

BETWEEN UK										
AND		**7**	**8**	**J1**	**J2**	**J3**	**TOT**	**DPM MTMC SUR**	**DPM AMC AIR**	**DPM COM AIR**
US11	ME	53	22	11	8	10	29	60	30	27
US12	NH	53	22	10	8	11	29	60	30	27
US13	VT	53	21	11	8	10	29	59	30	26
US14	MA	53	21	10	8	10	28	59	29	26
USIS	RI	52	21	10	8	10	28	59	29	26
US16	CT	52	21	10	8	10	28	59	29	26
US17	NY	52	21	10	8	10	28	59	29	26
US19	NJ	52	21	10	8	10	28	59	29	26
US20	PA	52	21	10	8	10	28	59	29	26
US22	DE	52	21	9	8	7	27	59	28	26
US23	MD	52	21	10	8	9	27	59	28	26
US24	DC	52	21	10	8	9	27	59	28	26
US25	VA	52	22	10	8	9	27	63	28	27
US27	WV	52	22	10	8	9	27	63	28	27
US28	KY	53	22	11	8	9	27	63	28	27
US30	MI	53	22	11	8	10	29	60	30	27
US32	WI	53	22	11	8	9	28	60	29	27
US34	OH	52	22	11	8	9	28	60	29	27
US36	IN	53	22	12	8	9	28	60	29	27
US38	IL	53	23	11	8	9	28	61	29	28
US40	NC	53	22	10	8	9	27	63	28	27
US42	TN	53	22	11	8	9	27	63	28	27
US44	SC	49	22	10	8	9	27	63	28	27
US45	GA	50	22	11	8	9	27	62	28	27
US47	AL	55	23	12	8	9	27	61	28	28
US48	MS	55	23	12	8	8	28	61	29	28
US49	FL-N	51	23	11	8	8	27	63	28	28
US496	FL-S	51	23	11	8	8	27	63	28	28
US50	MN	56	25	12	8	11	31	61	32	30
US51	ND	57	28	14	8	10	32	66	33	33
US52	SD	57	22	13	8	12	33	65	34	27
US53	IA	57	23	12	8	9	29	63	30	28
US55	ME	56	26	11	8	12	31	64	32	31
US56	MO	56	23	12	8	8	28	64	29	28
US58	KS	55	25	13	8	8	29	62	30	30
US60	AR	55	25	12	8	8	28	61	29	30
US62	OK	55	25	13	8	10	31	62	32	30
US64	LA	55	25	12	8	8	28	61	29	30
US66	TX - N	55	25	13	8	8	29	61	30	30
US68	TX - S	55	25	13	8	8	29	61	30	30
US70	MT	60	29	14	8	11	33	67	34	34
US72	WY	57	27	14	8	10	32	65	33	32
US74	CO	56	27	14	8	9	31	63	32	32
US76	UT	57	27	14	8	10	32	72	33	32
US77	NM	55	26	14	8	10	32	62	33	31
US79	AZ	56	27	14	8	10	32	72	33	32
US83	ID	59	27	14	8	11	33	72	34	32
US84	WA	60	29	16	8	11	35	72	36	34
US85	OR	60	29	16	8	11	35	72	36	34
US86	NV	60	28	15	8	11	34	72	35	33
US87	CA - N	60	29	16	8	11	35	71	36	34
US88	CA - S	60	29	16	8	11	35	71	36	34
US89	HI						53			

BETWEEN US89										
AND		7	8	J1	J2	J3	TOT	DPM MTMC SUR	DPM AMC AIR	DPM COM AIR
US11	ME	49	27				34	56	34	32
US12	NH	49	27				34	56	34	32
US13	VT	49	27				34	55	34	32
US14	MA	49	27				34	55	34	32
USIS	RI	48	27				34	55	34	32
US16	CT	48	27				34	55	34	32
US17	NY	48	27				34	55	34	32
US19	NJ	48	27				34	55	34	32
US20	PA	48	27				34	55	34	32
US22	DE	48	27				34	55	34	32
US23	MD	48	27				34	55	34	32
US24	DC	48	27				34	55	34	32
US25	VA	46	27				34	53	34	32
US27	WV	48	27				34	55	34	32
US28	KY	47	26				33	53	33	31
US30	MI	49	26				33	56	33	31
US32	WI	42	25				32	56	32	30
US34	OH	48	26				33	56	33	31
US36	IN	49	25				32	56	32	30
US38	IL	49	25				32	57	32	30
US40	NC	46	27				34	53	34	32
US42	TN	46	26				33	53	33	31
US44	SC	46	27				34	53	34	32
US45	GA	47	26				33	54	33	31
US47	AL	46	25				32	53	32	30
US48	MS	42	25				32	53	32	30
US49	FL-N	46	27				34	55	34	32
US496	FL-S	46	27				34	55	34	32
US50	MN	41	24				31	50	31	29
US51	ND	43	26				33	49	33	31
US52	SD	42	25				34	49	34	30
US53	IA	41	24				31	50	31	29
US55	ME	42	24				31	49	31	29
US56	MO	42	24				31	54	31	29
US58	KS	41	23				30	54	30	28
US60	AR	43	25				32	53	32	30
US62	OK	41	23				30	54	30	28
US64	LA	43	25				32	53	32	30
US66	TX - N	40	23				30	53	30	28
US68	TX - S	40	23				30	53	30	28
US70	MT	40	24				31	47	31	29
US72	WY	38	21				28	45	28	26
US74	CO	38	21				28	45	28	26
US76	UT	37	20				27	44	27	25
US77	NM	39	21				28	46	28	26
US79	AZ	38	20				27	45	27	25
US83	ID	37	20				27	46	27	25
US84	WA	38	20				27	45	27	25
US85	OR	38	20				27	45	27	25
US86	NV	37	20				27	45	27	25
US87	CA - N	36	19				26	43	26	24
US88	CA - S	36	19				26	44	26	24
US89	HI									

APPENDIX O

TOTAL QUALITY ASSURANCE PROGRAM (TQAP)

A. QUALITY CONTROL AND CARRIER PERFORMANCE.

1. Satisfactory Service. Carriers must consider the satisfaction of the member/employee and the Transportation Officer (TO) to be the final gauge of the quality of service. Reports and quality control procedures specified in this Appendix must be used by the TO to ensure that only those carriers providing high quality service are used.

2. Time Frames. All time frames, unless otherwise noted, are in calendar days.

3. Carrier's Right to Appeal. It is the carrier's right to appeal any action taken by a TO. In all cases, however, a carrier's appeal must be provided in writing to the responsible TO within 45 days of the action unless otherwise noted. The TO receiving an appeal must review the facts of the case, including any new evidence provided, before rendering a decision on the merits of an appeal. Carriers must provide documentary evidence to support appeals; any appeal will open the entire case for re-evaluation. All correspondence concerning appeals must be mailed to the carrier by certified mail.

4. Correspondence. All correspondence with/from a carrier must include the Standard Carrier Alpha Code (SCAC). All items mailed to a carrier by certified mail must be responded to in a similar manner. All written appeals must be answered in writing. Electronic mail or facsimile may be used to expedite information.

5. Shipment Inspections by the TO.

a. The TO or the TO's authorized representative must inspect as many shipments as possible using 50 percent of all personal property shipments (total inbound and outbound) as a goal. Witnessed weigh and reweigh must be accomplished to the maximum extent possible based on the workload and the location of weighing/reweighing.

b. Inspections by the TO will be made to ensure that carriers are performing in accordance with (IAW) the terms and conditions of the Tender of Service (TOS) (Appendix B).

c. When requested by the origin TO or the member/employee, the destination TO must make a maximum effort to inspect a specific shipment at the destination. When requesting an inspection at the destination, the origin TO will consider the following:

(1) Whether or not an inspection was conducted at the origin.

(2) An indication of poor-quality service or TOS violations on the shipment, (which must be identified in the request for inspection).

(3) An indication of the member's/employee's dissatisfaction with the service provided by the carrier.

6. Carrier Performance File.

a. The TO must establish and maintain a carrier performance file for each carrier qualified to serve the installation. The carrier performance file must contain or make reference to the following:

(1) The carriers accepted Letter of Intent (LOI) with all enclosures.

(2) A copy of the TO's acceptance of the carrier's LOI.

(3) Records of inspections of the carriers facilities and equipment (DD Form 1811, Pre-Award Survey of Contractor's/Carrier's Facilities and Equipment, (Figure 406-6) and DD Form 1812, Warehouse Inspection Report, (Figure 402-2).

(4) Origin and destination records of inspections of shipments handled by the carrier.

(5) Reports on the carrier's performance.

(6) Records of investigations of complaints made against the carrier.

(7) Carrier's notifications of failure to meet pickups, Required Port Delivery Dates (RPDD), and Required Delivery Dates (RDD).

(8) Records of shipment reweighs.

(9) Copies of warning and suspension notices sent to the carrier and the carrier's replies to such notices.

(10) Copies of all other communications concerning the carrier's performance.

b. The carrier performance file must contain records for three performance cycles (18-months), except for items (1) and (2) above, which will be retained as long as the carrier has Department of Defense (DOD) approval.

7. Performance Evaluation. The TO must review each carrier's performance file as necessary, but not less than semiannually. The carrier's performance must be reviewed with consideration for the provisions of the TOS, rate solicitation, and other standards for carrier performance. The TO should look for recurring deficiencies or patterns of unacceptable performance. If appropriate, actions will be taken to warn, suspend, or recommend disqualification.

8. Carrier Agent Review. A carrier (or carrier's designated agent) may review its performance file at the discretion of the TO. The carrier will not be allowed to review the performance file of another carrier.

B. QUALITY ASSURANCE PROCEDURES.

1. General.

a. Requirements and Standards. The TOS and rate solicitation specifies requirements of service that the carrier agrees to fulfill in the movement of DOD-sponsored personal property shipments. The provisions of Paragraph B provide guidance for the use of quality assurance procedures for both domestic and international Through Government Bills of Lading (TGBL) shipments.

b. Quality Assurance Actions. When a carrier or agent violates any provision of the TOS rate solicitation, or commits unethical or unlawful acts, the TO must take action.

2. Nonuse Actions.

a. Nonuse of a Carrier Initiated by Headquarters (HQ), Military Traffic Management Command (MTMC)/MTPP. MTMC/MTPP-HQ may direct the nonuse of a carrier for a definite or indefinite period of time.

b. TO Nonuse Action.

(1) The TO IAW the provisions of this Regulation may place carriers in nonuse for the following reasons:

(a) Disqualification of agent.

(b) Unsatisfactory performance.

(c) Agent bankruptcy, lack of containers, or other similar failure to continue to provide service.

(2) If the reason for a nonuse is due to the acts of an agent, the agent will be disqualified, and all other carriers represented by that agent will be advised of the disqualification and placed in a nonuse status until necessary action is taken to correct the deficiencies to the satisfaction of the TO or until the carriers obtain new qualified agents. If there is more than one agent on the LOI, the carrier will not be placed in nonuse if the disqualified agent is the booking agent. The next agent listed on the LOI becomes the booking agent until the carrier designates a new booking agent or the original agent is removed from the LOI. If the agent does not provide sufficient evidence of corrective action within 45 days, the TO will notify all carriers using the affected agent of return of the LOI for all carriers represented by that agent.

(3) No traffic will be offered to a carrier in nonuse. See Paragraph D for procedures regarding onward movement of shipments already in the pipeline. Upon satisfactory resolution of the deficiency, the carrier will be returned to the Tonnage Distribution Report (TDR) IAW the traffic distribution procedures.

c. Nonuse of a Carrier Due to a Strike at an Agent’s Facility. When an agent’s service is affected by a strike, all carriers represented will be placed in a nonuse category. At the conclusion of the strike, the carriers will be reinstated to the TDRs at the highest cumulative tonnage using the latest semiannual average shipment score.

3. Letter of Warning (LOW). A LOW (DD Form 1814, Carrier Notice of Warning/Suspension/Reinstatement/Cancellation, Figure O-3) will be issued by the TO to a carrier for unacceptable performance. The LOW must state, as a minimum, the member's/employee's name, Personal Property Government Bill of Lading (PPGBL) number, and the TOS or rate solicitation paragraph number violated on each shipment(s) resulting in the LOW. A LOW will serve as notice to a carrier that if TOS violations or performance problems continue, suspension action may follow. LOWs will be prepared when a trend or a series of TOS or rate solicitation violations are noted. It is not necessary to send one LOW for each TOS violation unless the TO believes that a single violation, if repeated, may constitute a suspension. The TO may attach the DD Form 1780, Shipment Evaluation and Inspection Record (Figure O-1) that supports the warning. LOWs must be sent by certified mail, return receipt requested. Unless a written response is requested by the TO, carriers will not be required to respond to LOWs.

4. Letter of Suspension.

a. General.

(1) DD Form 1814 must be used to notify the carrier of a suspension action. The letter of suspension must state the member's/employee's name, PPGBL number, and the TOS or rate solicitation paragraphs violated on the shipment or shipments resulting in the suspension action. When a carrier is suspended, the suspension must apply to domestic household goods (HHG) shipments, international HHG shipments, or unaccompanied baggage (UB) shipments originating at the TO. The letter of suspension must state "Failure to provide corrective action within 90 days from the effective date of the suspension may result in return of your LOI." The TO may attach the DD Form 1780 that supports the suspension or a previous DD Form 1814 that reflects a letter of warning.

(2) All suspensions will remain in effect for a minimum of 30 days.

(3) If the TO determines that the carrier's response to a suspension is not adequate, the TO must notify the carrier in writing within 21 days of the postmark of the carrier's response that the corrective action was not acceptable and the carrier will remain in suspension status until such time as acceptable corrective action is completed.

(4) When a carrier fails to provide adequate evidence of effective corrective action after 90 days of the effective date of the suspension, the TO may return the carrier's LOI by certified mail. When returning an International Through GBL (ITGBL) carrier's LOI, the TO will notify MTMC/MTPP-HQ. A carrier whose LOI is returned under this provision may not submit a new LOI until corrective action for the original deficiency has been accepted by the TO.

(5) When the TO suspends a carrier, the suspension should be imposed within 30 days of notification of violation or within 30 days after the semi-annual review of the carrier's performance.

(6) When a letter of suspension is issued, PPGBLs for shipments already offered and accepted by the carrier, but not yet packed by the carrier or agent, may be canceled and retendered to another carrier.

(7) All suspensions will run consecutively. If a carrier receives a second suspension while under a current suspension, the carrier will remain in a suspended status for the minimum 30 days required for the second suspension once the first suspension has been completed. Carriers must provide acceptable corrective action for all suspensions before they may be reinstated.

(8) A suspension will be issued by the origin TO based on violations detected at the origin or based on the destination TO's recommendation. When a destination TO detects a flagrant violation in a shipment that requires immediate suspension, the destination TO will contact the origin TO, stating all the facts pertinent to the case. The origin TO, upon review of the facts, will take suspension action. If the origin TO disagrees with the destination TO's recommendation, the origin TO must advise the destination TO of the reasons for not taking suspension action. If the destination TO disagrees with the refusal, all facts and documents pertaining to the case will be forwarded to HQ MTMC for resolution.

b. Regular Suspensions.

(1) A regular suspension may be imposed when a carrier repeatedly violates any provision of the TOS or other rules and regulations. As a guideline, when a carrier commits the same violation three or more times during a 180 day period, suspension action will be considered.

(2) When the origin TO issues a regular suspension, the carrier will be afforded a period of 20 days from the signature date on the DD Form 1814 before effecting the suspension. The carrier may use this opportunity to provide compelling evidence to refute the information provided by the TO as the basis for the suspension. In the absence of such evidence, the suspension will become effective on the 21st day following the date the letter of suspension was signed. This provision serves to preclude loss of traffic to the carrier which would have otherwise been offered shipments had the suspension not been imposed. Should the carrier elect to present such evidence, determination as to whether the suspension should or should not be rescinded rests with the TO.

(3) Ordinarily, a TO may not impose an additional suspension for the same type violation on a subsequent shipment if the pickup date of the shipment on which the same violation occurs was prior to the date of the original suspension. Additionally, origin TOs should not suspend a carrier more than once on a single shipment. However, the TO may require that corrective action apply to all violations before the carrier may be reinstated.

(4) The following factors will be considered reasonable grounds to impose a regular suspension:

(a) Failure to meet the agreed upon pickup date as specified on the PPGBL.

(b) Failure to meet the RDD, or a pattern of shipments that miss the RDD.

(c) Failure to correct a deficiency noted in a LOW.

(d) Service failure as determined by excessive shipment refusals, carrier imposed embargoes, or turn back of shipments.

(e) Failure to meet the RPDD or a pattern of shipments that miss the RPDD.

c. Immediate Suspensions. An immediate suspension will be imposed when a carrier's performance on a single shipment is such that the continued participation in DOD traffic is unacceptable. An immediate suspension does not require prior issuance of a LOW. When an immediate suspension is issued, the TO will cease offering shipments to the carrier. The suspension will be effective on the signature date of the DD Form 1814 issuing the suspension. An immediate suspension will be issued for the following violations, including but not limited to:

(1) Carrier personnel or authorized representatives being under the influence of, or using, alcohol or unlawful drugs at the member's/employee's residence.

(2) Carrier personnel or authorized representatives using abusive language, actions, or immoral conduct in the presence of the member/employee or the member's/employee's family.

(3) Carrier personnel smoking in the member's/employee's residence (without member's/employee's approval) or at any time in the moving van or container.

(4) Evidence of fraud on the part of the carrier's personnel or authorized representatives.

(5) Evidence of deliberate damage to the member's/employee's possessions.

(6) A member's/employee's property remaining in a carrier's origin facility on or after the RDD/RPDD.

(7) A member's/employee's property being held at the carrier's terminal facility, or being moved in local or linehaul service, where protection from the elements is not provided.

d. Carrier Appeal of a Suspension Action.

(1) A carrier has the right to appeal a suspension imposed by the origin TO. The appeal must be mailed directly to the origin TO and must be postmarked within 45 days from the date of the signature on the notification of suspension. TOs will use the United States (US) postmark date on the envelope from the carrier to determine if the 45-day appeal period has been met. In case of express mail, the date the appeal was released to the express company will be considered the same as an US postmark. A facsimile may be accepted to meet the 45 day appeal period, however, the response time for the TO will be based on the US postmark of the mailed appeal. The carrier's appeal must be factual, fully documented and provide evidence of why the suspension action should not be imposed.

(2) The TO must make every effort to resolve the appeal. The TO must either inform the carrier that the appeal is granted or provide a reason for its denial. The TO's response to the

carrier's initial appeal must be forwarded not later than 45 calendar days from the postmarked date of the carrier's letter of appeal or the carrier will be reinstated until the appeal is resolved and the carrier is provided a written response by the TO.

(3) An appeal denied by the TO may be further appealed by the carrier to HQ MTMC. Initiation of this appeal is the responsibility of the carrier and cannot be delegated to the carrier's agent(s). The appeal must include a copy of the carrier's initial appeal to the TO, the TO's response, and any other supporting documents which will assist the appellate authority in rendering a decision. HQ MTMC is the final appellate authority for suspensions.

(4) If HQ MTMC upholds the appeal, they will notify the TO to reinstate the carrier and notify the home office of the carrier of the decision. If a carrier's appeal of a suspension is upheld, the carrier must be reinstated to the TDRs at the weight held at the time the suspension was put into effect. However, tonnage may not be adjusted between different rate cycles.

5. Disqualification. A carrier may be disqualified only by HQ, MTMC. Disqualification action may be taken independently by HQ MTMC, or may result from the recommendation of a TO.

a. Recommendation for Disqualification.

(1) The origin TO may request disqualification when a carrier:

(a) Incurs three suspensions during a 180-day period.

(b) Fails to attain the minimum acceptable performance score for two consecutive performance periods.

(c) Clearly indicates their inability or unwillingness to meet their contractual agreement as specified in the TOS and/or rate solicitation.

(2) The TO will forward the following to document their report for disqualification to HQ MTMC.

(a) Chronological listing by pickup date of all shipments, HHG or UB, tendered to the carrier during the period involved. Include scores of the shipments.

(b) Listing of both shipment refusals and shipments accepted.

(c) Copies of suspensions and other supporting documents, e.g., customer satisfaction reports, letters of complaints, tracer requests, LOW, etc.

(d) Copies of all correspondence to and from the carrier during the period involved.

(3) HQ MTMC will review each recommendation for completeness. If the documentation is incomplete, it will be returned to the TO for correction or additional data.

(4) TOs will not normally place carriers in nonuse when recommending disqualification unless circumstances indicate lack of security, fire hazard, or deliberate damage to a member's/employee's property. Generally, the carrier may be in a suspended status prior to or concurrently with the recommendation for disqualification.

b. Carrier Appeal of a Disqualification. If the carrier's appeal is accepted, the carrier will be reinstated to the TDRs and will be offered sufficient tonnage, if necessary, to reestablish the carrier's relative position held when the disqualification was recommended.

6. Reinstatements. Actions which serve to preclude the award of traffic to a carrier (nonuse, suspension, traffic denial, or disqualification) are independently applied by the TO or HQ MTMC, in response to a carrier's demonstrated inability to perform services IAW the TOS or other program requirements. A carrier will not be eligible to receive traffic when any of these actions have been initiated. For example, a carrier which is disqualified by HQ MTMC, and is later reinstated, will not be awarded traffic at the time the disqualification is lifted if the carrier is either in nonuse, under suspension, or traffic denial status imposed by the TO. Carriers placed in nonuse, suspension, or disqualification status are reinstated to the TDRs IAW the following procedures:

a. Return to TDRs of Nonuse Carriers. The term nonuse, as used within this Appendix, corresponds identically with the manner in which it is used in Paragraph B. 2. As nonuse may be imposed under differing conditions by HQ MTMC, or the TO, the following distinctions are necessary concerning the effect on a carrier's TDR standing:

(1) When notified by HQ MTMC of the reinstatement of a nonuse carrier, the TO must restore the carrier to the TDRs using the carrier's most recent semiannual average shipment score. HQ MTMC will specify how the carrier will be returned to the TDR.

(2) When nonuse imposed by the TO is lifted, the carrier is reinstated to the TDRs using the carrier's most recent semiannual average shipment score and at the highest cumulative tonnage of any carrier within the same rate group on the TDR.

b. Reinstatement to the TDR on Return from Suspension.

(1) Class 1 and 2 Rate Channel - Primary Carrier. Upon return to the TDR at the end of a suspension period, a primary carrier will be reinstated with a cumulative tonnage equal to the highest cumulative tonnage of any carrier on the TDR, or at the tonnage it would have received had it not been suspended, whichever is greater. To compute tonnage the carrier would have received had it not been suspended, add up all tonnage awarded during the suspension period and multiply that total by the primary percentage for that channel. Add the result of that equation to the cumulative weight of that carrier. Compare this total with the highest cumulative tonnage of any carrier on the TDR. The cumulative tonnage for the prime carrier upon reinstatement is the greater of these two tonnages.

(2) Class 2 Rate Channel - Equalization Carrier. Upon return to the TDR at the end of a suspension period, an equalization carrier will be reinstated with a cumulative tonnage equal to the highest cumulative tonnage of any equalization carrier on the TDR; or with a cumulative tonnage of any other participating carrier on the TDR to which traffic was awarded during the

period of suspension; or in the case in which there is only one equalization carrier, the tonnage it would have received had it not been suspended, whichever is greater. The carrier will be reinstated using the most recent average semiannual shipment score.

(3) Class 1 and 2 Rate Channel - Other Participating Carrier. Upon return to the TDR at the end of a suspension period, other participating carriers will be reinstated with a cumulative tonnage equal to the highest cumulative tonnage of any other carrier on the TDR; or with a cumulative tonnage of any other participating carrier on the TDR to which traffic was awarded during the period of suspension; or in the case in which there is only one other participating carrier, the tonnage it would have received had it not been suspended, whichever is greater. The carrier will be reinstated using the most recent average semiannual shipment score.

(4) Class 3 Nonincentive Rate Channel - All Carriers. Upon return to the TDR at the end of a suspension period, the carrier is reinstated to the TDRs using the carrier's most recent average semiannual shipment score and at the highest cumulative tonnage of any carrier on the TDR.

c. Return of Carriers to the TDR after Return of LOI. Carriers cannot resubmit a LOI with the same agent(s) that were listed on their returned and/or previous filed LOI, if return of LOI was due to the loss of agent. Carriers that are returned to the TDR after resubmitting a returned LOI, are assigned an administrative score of 90. Carriers returned to the TDR in the middle of the cycle also receive an administrative score of 90. All shipments will continue to be scored, regardless of a carrier's standing at an installation (i.e., nonuse, suspension, loss of LOI, disqualification, etc.). Scores will continue to be batch mailed and semiannual scores will be sent to the carriers. The carrier will then be placed on the TDR at the beginning of the new rate cycle at the last earned semiannual score. In cases where no shipments were scored during the cycle in which the LOI was returned, the carrier retains the administrative score of 90. If a carrier lets an entire cycle go by without agency representation, he/she is not entitled to any previous earned score. Traffic denial time frames will apply regardless of LOI procedures for those carriers that should have gone into traffic denial. Such carriers will be returned to the TDR at an administrative score of 90 when the traffic denial period is over. Should the traffic denial period be for 180 days (entire six-months) and the carrier receives an updated semiannual score based on outstanding shipments scored, the carrier would be returned to the TDR at the score earned for the rate cycle.

d. Return to TDRs of Disqualified Carriers. When a carrier disqualification is ended, the carrier will be reinstated to the TDRs with an administrative score of 90 and at the highest cumulative tonnage of any like carrier on the TDR, unless otherwise directed by HQ MTMC.

7. Traffic Management.

a. General. Shipments will be distributed exclusively to carriers on the lowest rate level unless the volume of traffic exceeds the capability of the low-rate carriers. When this occurs, the remaining traffic must be offered to carriers on the next and succeeding rate levels. Shipments must always, however, be offered first to the carriers in the lowest rate level before higher rate level carriers are considered unless the primary carrier is suspended, cancels its rates, is placed in nonuse, or refuses the traffic. It is necessary to apply sound traffic management judgment to

tender shipments uniformly by spreading traffic over the distribution period, while not over-loading any one carrier.

b. Shipment Refusal. A shipment refusal by a carrier will be considered a traffic offering, and the weight will be charged against the carrier as long as the shipment was offered at least seven days before the requested pickup date. Refusals will be noted by annotating the letter "R" in the status code column of the TDR. Periodic refusals are shipments refused where no evidence of a particular pattern exists. Selective refusals show evidence of a continuous pattern of selectivity as to shipments accepted, or continuous refusal of shipments to specific destination areas, e.g.; carriers refuse shipments under 1,000 lbs but accept larger ones, carriers refuse shipments to a specific geographical area and accept shipments to others, etc.

(1) Periodic, selective, or patterned refusals by any carrier is prohibited. If a pattern is observed, the TO will initiate action. For both TGBL and ITGBL carriers, refusals of a significant number of shipments or refusals which indicate selectivity will be grounds for suspension, disqualification, and/or return of a carrier's LOI.

(2) Refusals by a primary carrier within (but not exceeding) the designated share of the cumulative total of traffic allocated normally will be considered grounds for suspension.

(3) Equalization carriers refusing shipments offered within their residual traffic limit will be subject to suspension.

(4) Other participating carriers refusing shipments offered within the specific percent channel are subject to suspensions.

c. Embargoes. An embargo is a declaration by a carrier temporarily suspending service by refusing to accept DOD shipments offered. Normally, embargoes are for all shipments from a specific origin location or TO area of responsibility to all destinations serviced by the carrier. Embargoes by carriers against DOD personal property shipping offices (PPSO) or shipments are not authorized in the DOD personal property movement and storage program. However, during certain periods, especially during the summer shipping season, a carrier or agent may, in the interest of traffic management, temporarily cease or reduce booking shipments from an origin location because of saturation that relates to equipment or agent capability.

(1) Refusals due to workload saturation may be authorized. The TO may accept a letter or facsimile from a carrier or agent indicating that a temporary capability problem exists and shipment refusals during the saturation period are necessary. A TO must verify that the carrier has accepted some shipments and must evaluate the local agent capability by examining all the services provided by the carrier and local agent(s), to include domestic, international, and nontemporary storage shipments. When the TO's review of the carrier's or agent's situation is determined to not warrant refusals, the TO will advise the carrier/agent in writing that the notice of saturation is being returned and the carrier will be required to provide shipment services when requested. The carrier or agent notice of saturation will include dates shipments cannot be accepted, codes of service, and other information which will assist the TO in determining when the carrier or agent will be available to accept shipment offers. Generally, the saturation period should not exceed one month at any one time.

(2) TOs are not required to offer shipments if the pickup dates are during the saturation period. The TO will continue to charge tonnage against the carrier on the TDR as if shipments were refused in normal operations. Shipments with pickup dates after the saturation period will continue to be offered. At the end of the saturation period, upon request from the carrier, the TO will notify the carrier of tonnage charged during the period of saturation. The TO will retain the notice of saturation, along with the TDR.

(3) The continued refusal of shipments by a carrier that is found to have the capability to service shipments will be grounds for suspension, disqualification, and possible return of the LOI IAW the TOS.

d. Reallocating Shipments. Shipments that have been pulled/turned back within seven or less days of the pickup date are considered short-notice shipments when reallocating to the new carrier. Such shipments will not be charged against the new carrier on the TDR. Such shipments will be coded "B" on the TDR for identification and audit purposes.

C. CARRIER ASSESSMENT PROGRAM (CAP).

1. General.

a. This Paragraph provides guidance and establishes procedures for collecting performance data and evaluating carrier performance. This applies to all domestic and international HHG and UB shipments moved under a PPGBL.

b. Purpose. The CAP establishes standards for use by the TO in evaluating the performance of ITGBL and TGBL carriers which serve the TO and, at the same time, provides the TO a management tool to reward carriers which have proven their ability to meet those standards through continued participation in traffic distribution.

2. Carrier Evaluation.

a. General. Under CAP, the origin TO evaluates carrier performance on each shipment. Additionally, every six months the origin TO will review all shipments contained in the carrier's performance file. A carrier will be evaluated at the end of each performance period, regardless of their current status.

b. Performance Standards. The following performance standards have been established for on-time pickup, on-time delivery, and the absence of loss/damage:

On-time Pickup	20 points
On-time Delivery	40 points
Absence of loss/damage	40 points

c. Carriers failing to meet or exceed the minimum acceptable performance standard of 90 or above will be considered unsatisfactory and placed in traffic denial. Those meeting or exceeding the minimum will be considered satisfactory and will share equitably in the distribution of traffic, based on their rate level and performance score.

d. Carrier Evaluation. All shipments will be evaluated at the end of each performance period regardless of carrier status, e.g., suspension, nonuse, removal, etc. using a combination of on-site inspections, the DD Form 1840, Joint Statement of Loss or Damage at Delivery (Figure 401-4)/DD Form1840R, Notice of Loss or Damage (Figure 401-5) and/or administrative documents available to the TO. The evaluation of carrier performance will be accomplished through two separate processes:

(1) Scored Elements. The three elements scored are pickup, delivery, and loss/damage. These three elements, considered the most important to a move, will be the basis for determining if a carrier is satisfactory at the end of the performance period.

(2) Nonscored Elements. All other TOS violations are evaluated separately by the TO.

e. Forms Supply. All forms used are available through normal distribution channels. The following are the primary forms used in the CAP:

(1) DD Form 1780, Shipment Evaluation and Inspection Record (Figure O-1).

(2) DD Form 2497, Carrier Evaluation Work Sheet/Report (Figure O-2).

(3) DD Form 1840, Joint Statement of Loss or Damage at Delivery (Figure 401-4).

(4) DD Form 1840R, Notice of Loss or Damage (Figure 401-5).

(5) DD Form 1814, Carrier Warning/Suspension/Reinstatement/Cancellation of Warning (Figure O-3).

3. Shipment Evaluation.

a. Evaluation of carrier performance begins when the origin TO offers a shipment to the local agent designated by the carrier to accept shipments on behalf of the carrier. Acceptance of the offer binds the carrier to perform IAW the general terms established by the DOD and agreed upon by the carrier in the TOS and the specific terms contained on the PPGBL and the rate solicitation.

b. The origin TO will initiate a DD Form 1780 to evaluate and provide a record of the carrier's performance on each shipment offered. The entire performance evaluation process begins with this document. All shipments will be evaluated regardless of carrier's status at the PPSO (i.e., LOI returned, disqualified, etc.).

c. The origin TO has primary responsibility in the evaluation of carrier performance. For the origin TO to fully evaluate a shipment, there must be feedback from the destination TO. In general, the destination TO will use the DD Form 1780 and DD Form 1840/1840R to accomplish this task. The destination TOs must be careful to complete all blocks that the origin TO must rely on to complete a shipment evaluation. Special attention must be made to Blocks 16, 17, and 19 on the DD Form 1780. It is vital that the date shipments go into storage in-transit (SIT) (Block 17) be completed. In addition, unless a DD Form 1840R has been received from

the destination claims office, destination TOs will not return any destination feedback to the origin TO to be used for scoring until at least 90 days has expired since delivery of shipment to the member/employee.

d. A shipment evaluation is complete only after the origin TO has determined the numerical score and mailed a copy of the completed DD Form 1780 to the carrier. The TO may not rescore any shipment to the detriment of the carrier once a score has been mailed to the carrier.

e. The origin TO will maintain a suspense file on all shipments. The file arrangement will be determined at the TO level. All shipments will be scored within 12 months of the pickup date. If the destination information is not known (no feedback has been received from destination), the origin TO must make every attempt to contact the destination TO for delivery and/or shipment information. Such shipments may be scored with the information available. In most cases, carriers are awarded 40 points for no loss/damage. Origin TOs must ensure shipments that are scored while still in storage are flagged/marked to prevent rescoring at a later date. TOs, on a case-by-case basis, may use their discretion to score shipments in which attempts have been made to gather destination feedback without success.

(1) If a shipment has been overlooked at the 12-month interval, it may still be scored with the information available. Normally the carrier identifies these types of shipments during the 45-day appeal period of the DD Form 2497. Shipments identified to the TO by the carrier or discovered by the TO between 12 and 18 months of pickup date will be scored and the DD Form 1780 batch mailed IAW the TQAP. These scores will be reflected on the carrier's next semiannual evaluation score.

(2) Shipments that have been converted to Nontemporary Storage (NTS) or commercial storage will not require a DD Form 1840 for scoring. Destination TOs that convert shipments to NTS or commercial storage will annotate the DD Form 1780 at the time the shipment is converted and return the DD Form 1780 to the origin TO. The DD Form 1780 must still have the necessary delivery information, i.e., date shipment went into storage, so the origin TO can determine if the shipment met the RDD. Unless otherwise indicated in the file, the origin TO may score the shipment allowing full credit for no loss/damage.

(3) Scoring 120 days after delivery is done only if a carrier requests a score and gives the origin TO a copy of the DD Form 1840/1840R. Origin TOs that have concerns over the status of a shipment (i.e., meeting the RDD/RPDD, additional loss/damage, suspicion of TOS violations, etc.) must call the destination TO to ensure the accuracy of the information. The TO will not set up suspense dates to score shipments 120 days after the RDD/RPDD of the GBL.

(4) Shipments older than 18 months after the pickup date will be considered null and void and will not be scored or considered in future appeals.

4. Performance Factors.

a. On-time Pickup.

(1) The origin TO will add 20 points to the carrier's shipment score for meeting the pickup date established and agreed to by the carrier as shown on the PPGBL.

(2) In cases where a shipment is being removed from NTS and the linehaul carrier and storage warehouseman agree to a pickup date later than originally established by the TO, and when the change is coordinated with and approved by the TO, 20 points will be awarded. Any additional time allowed under this exception for pickup from NTS for the convenience of the carrier/warehouseman will not constitute authorization for additional storage charges to the Government nor affect the assigned RDD. A carrier which fails to effect pickup as ordered will be scored as missing the pickup but normally would not be suspended.

b. On-time Delivery.

(1) The RDD established by the origin TO as shown on the PPGBL, will be the basis for determining whether or not the carrier accomplished an on-time delivery. All counselors must be aware that when establishing a RDD, the Transit Time Guide is a "guide". In addition, the transit times listed are the "minimum" time allowed. If a carrier or designated agent accepts a shipment with a RDD less than the minimum transit time, this RDD will apply for evaluation purposes.

(2) If a shipment is not offered for delivery on or prior to the RDD, the shipment will be considered as having not met the RDD. When the destination TO determines that the member/employee is unable to receive the shipment at the time the carrier offers the shipment for delivery, the TO will assign a control number authorizing the carrier to place the shipment in SIT.

(3) When the carrier offers a shipment for delivery and the TO determines that the member/employee is able to receive the shipment, a SIT number will not be issued. The actual date on which the carrier delivers the shipment to the member/employee will be used to determine whether the carrier met the RDD.

(4) The TO will award the carrier 40 points for a shipment which meets the RDD. For each day the shipment is late, 4 points will be deducted up to a maximum of 40 points. The carrier will receive no points for a shipment 10 or more days late.

(5) The carrier will ensure outbound Code J shipments are delivered to the origin Air Mobility Command air terminal on the RPDD specified on the GBL and Military Shipment Label. The actual Aerial Port of Embarkation arrival date will be provided to the PPSO along with the shipment score by MTMC, to be used to evaluate the carrier.

NUMBER OF DAYS LATE	0	1	2	3	4	5	6	7	8	9	10
POINTS EARNED	40	36	32	28	24	20	16	12	8	4	0

c. Estimating Loss and/or Damage.

(1) The completed DD Form 1840/1840R will be the primary source document used by the TO to develop an estimated dollar value as to loss and/or damage sustained to the member's/employee's property on the move. Other documentation may be used at the discretion of the TO to estimate loss or damage and to more fully judge the ability of the carrier to meet both the needs of the member/employee and the carrier's adherence to the TOS. If the loss and or damage is based on information other than a DD Form 1840R, a notation must be made in the remarks section of the DD Form 1780. For example, "Damage in the amount of $600 derived from other than DD Form 1840R." If documentation other than the DD Form 1840 is used to derive the loss and/or damage estimate, a copy of that documentation must be forwarded to the carrier with the DD Form 1780.

(2) Where there appears to be evidence of deliberate damage to a member's/employee's property, the shipment will be scored based on the estimated loss and damage determined by the TO. In addition, when the TO determines that the damage was not caused by an unusual occurrence (as defined in the TOS), the destination TO will recommend to the origin TO that the carrier be immediately suspended.

(3) TOs must be particularly responsive to the Service/Agency member/employee when loss and/or damage in excess of $500 is reported. On these shipments, every effort must be made to physically inspect the shipment, considering the availability of an inspector and distance to the member's/employee's residence. While the absence of an inspection does not preclude a determination of loss and/or damage in excess of $500, the presence of a representative from the TO to assist the member/employee also serves to more fully document the service provided by the carrier.

(4) Upon completion of the estimate, the TO will award the carrier 40 points when the shipment is reported to have sustained no loss and/or damage. If loss and/or damage is indicated, but there is not enough information to develop an estimate of the loss/or damage, the PPSO will indicate a dollar amount of loss and/or damage under $100 on DD Form 1780. If loss and/or damage is reported, the TO will deduct 2 points for loss and damage of $1-$500, and 6 points for loss and damage of $501-$901 from the carrier's shipment score for each $100 increment as shown:

ESTIMATED $ LOSS or DAMAGE	0	1-100	101-200	201-300	301-400	401-500	501-600	601-700	701-800	801-900	901+
POINTS EARNED	40	38	36	34	32	30	24	18	12	6	0

(5) A total of 40 points will be deducted from the shipment score when loss and/or damage sustained on a shipment is estimated to be in excess of $900. Annotation of loss/damage taken from the DD Form 1840/1840R may be made on the DD 1780 and transmitted electronically to the origin TO. To substantiate the shipment score, TOs will provide a copy of

DD Form 1840/1840R to the carrier upon request. In addition, the origin TO will determine if the carrier should be suspended.

(6) Before attempting to score the shipment, origin TOs must ensure the destination TO is allowed sufficient time (75 calendar days following shipment delivery for the member/employee to submit plus two weeks for batch mailing) to provide the DD Form 1840/1840R. If the DD Form 1840R information has not been received by the origin TO at the time the shipment is scored, the TO will compute the score with the information available and annotate the absence of the DD Form 1840R in the remarks section, "No DD Form 1840R available at the time of scoring." Without member's/employee's feedback, no shipment will be scored until at least 90 days after shipment delivery or a DD Form 1840R has been received. A carrier's customer satisfaction query, signed by the member/employee, is acceptable in lieu of waiting for the DD Form 1840R.

(7) TOs must not reduce shipment scores because "Date signed", Blocks, 14.f. and 15.f. have not been completed on the DD Form 1840 within 30 days. Failure of a carrier/agent to properly complete documentation is a TOS violation. TOs will issue a LOW. TOs will be advised that the date a shipment is delivered into SIT is the date used to determine whether a carrier should be awarded points for an on-time delivery and that the date the DD Form 1840 was signed is not relevant in measuring on-time delivery.

5. Individual Shipment Scores.

a. When an inspection of the shipment is performed at the destination, the DD Form 1780 will be used to record observations of the inspector. The destination TO is responsible for returning the DD Form 1780, a copy of the DD Form 1840R, if received from the servicing claims office, and any other document necessary to score the shipment. The destination TO will complete and return the DD Form 1780 to the origin TO within 90 days after delivery to the member/employee.

b. After receiving the DD Form 1780 information from the destination TO, the origin TO will review all information in the member's/employee's file and then score the shipment. The shipment will be scored based on the matrix in Figure O-1. TOs must evaluate, score, and mail the completed DD Form 1780 to the carrier within 15 days of receiving the necessary documentation from the destination TO.

(1) When there is evidence that the carrier failed to meet conditions of the TOS, the TO will ensure those specific violations of the TOS are identified. Any TOS violations noted will be considered as notification to the carrier of unsatisfactory performance (see Block 29 on DD Form 1780).

(2) When the origin TO determines that the carrier's service was unsatisfactory, a DD Form 1814 will be prepared. The LOW or suspension will be sent by certified mail.

(3) Completed copies of the DD Form 1780 will be batch mailed to the carrier by first class mail on the 15th and 30th of each month. A cover sheet indicating which DD Forms 1780 are included is required on all batch mailings (may list by member's/employee's name, GBL

number, etc.) A copy of the completed DD Form 1780 will be maintained by the origin TO in the active portion of the carrier's performance file.

6. Individual Shipment Evaluation Appeal Procedures.

a. Carriers must be afforded the opportunity to appeal shipment scores and other TOS violations noted by the TO on the DD Form 1780. Appeals may not be made on DD Forms 1780 or 2497. Carriers must appeal each shipment score separately on company stationery.

b. Appeal Periods. DD Forms 1780 are batch mailed to the carrier on the 15th and 30th of each month. The 45-day appeal period will begin on the first day following the batch mailed date. Example: The DD Form 1780 is dated 6 April and batch mailed to the carrier by the origin TO on 15 April. The carrier may submit an appeal to the origin TO not later than 30 May. TOs will use the US postmark date on the envelope from the carrier to determine if the 45-day calendar appeal period has been met. In case of express mail, the date the appeal was released to the express company will be considered the same as an US postmark. A facsimile may be used to meet the 45-day appeal deadline.

c. During an appeal, the shipment case will be reviewed in its entirety, allowing the score to be raised or lowered based on the results of the evaluation. Carriers will be allowed another 15 days to appeal a score that has been changed.

d. Actual adjudicated claim data will be used if submitted by the carrier within the 45-day appeal period to the TO and will take precedence over an estimate on a DD Form 1840. This includes claims settled directly (full and final settlements only) with the member/employee by the carrier. If this information is not received by the TO in the 45-day appeal time, it will not form the basis for formulation of an appeal to HQ MTMC.

e. Upon receipt, the TO will verify that the appeal meets the 45-day appeal period requirement, and then review all available facts. Appeals will be adjudicated by the TO within 45 calendar days of receipt and the carrier notified of the decision in writing. Adjustments to the carrier's DD Form 1780 will be made by the TO, and the carrier advised, in writing, of the decision regarding the appeal. If the TO does not provide a response within 45-days of receiving the appeal, the carrier's appeal will automatically be granted. The carrier is responsible for providing proof of the original appeal and the appeal date.

f. Grounds for appeal include, but are not limited to, the following:

(1) Delays in the Defense Transportation System (DTS) when sufficiently documented.

(2) The carrier provides compelling evidence that loss and/or damage was sustained while in the hands of the DTS.

(3) Acts of God (i.e., blizzards, hurricanes, typhoons), public authority, or negligence of the member/employee, and/or member's/employee's agent.

(4) Hostile or warlike action in the time of peace or war.

(5) Insurrection, rebellion, revolution, civil war, usurped power, or action taken by Government authority in hindering, combating, or defending against such occurrence.

(6) Strikes, lockouts, labor disturbances, riots, civil commotion, acts of person or persons taking part in such occurrences or disorders.

(7) Inherent vice of the article or infestation by mollusks, arachnids, crustaceans, parasites or other types of pests, fumigation or decontamination when not the fault of the carrier.

(8) Vessel breakdown at sea.

(9) Adjudicated claims information.

(10) Mathematical and administrative errors.

g. If an appeal is denied by the TO, the carrier may further appeal to HQ MTMC. The carrier must submit the appeal within 45 calendar days of the date of the response of the TO's denial. TOs responding to TQAP appeals from carriers disputing a score based on missed RDD because the shipment went through the DTS are to consider Transportation Control and Movement Documents, Cargo Manifests, Automated Port Agent reports, Manifests (or facsimiles of such) that shows the release information to and from the DTS system as valid receipts when reviewing such appeals.

h. Shipments Detained by Customs. It is the TO's responsibility to provide the proper paperwork to the carrier prior to or at the time a shipment is picked up. Carriers moving ITGBL shipments are responsible for ensuring that proper documentation is received from the TO at the origin to prevent possible customs delay. If customs offices hold a shipment for inspection at the port of entry, the custom officials will redline the shipment. In addition, the shipment documents must be dated when it clears customs. A carrier's port agent must have a record of these dates and circumstances.

i. Shipment evaluations that have been appealed to HQ MTMC will be included in the semiannual evaluation of the carrier's performance until decided by the appellate authority. The appellate authority will have 45-days to adjudicate the appeal and provide both the carrier and the TO with their decision regarding the appeal. The decision of the appellate authority will be predicated on those facts presented by the carrier in the initial appeal to the TO. The decision of the appellate authority will be considered final.

7. Semiannual Evaluation Process.

a. General.

(1) Formal carrier performance evaluations will be conducted every six months or more often if deemed necessary by the TO. The TO will use records contained in the "active" portion(s) of the carrier's performance file as the basis for this evaluation. A performance evaluation will be directed toward the identification of trends or repeated instances of the same or similar TOS violations.

(2) Carriers will be evaluated separately by type of service, domestic HHG (Codes 1 and 2) international HHG (Codes 3, 4, 5, 6, and T) and UB (Codes 7, 8, and J). Each carrier will receive only one domestic HHG score, one international HHG score and one UB score from a TO regardless of areas of operation or traffic channels.

(3) Individual shipment scores will be posted to the DD Form 2497 at the time DD Forms 1780 are mailed to the carrier. At the end of the semiannual evaluation period, the origin TO will use DD Form 2497 (or a similar document containing the same relevant information if the installation has automated data processing capability) to identify all shipments scored during the evaluation period.

(4) A carrier which obtains an average shipment score of 90 or above, without regard to the number of shipments upon which the average shipment score was determined, will be afforded the continued opportunity to receive traffic for that type of service on which performance was satisfactory.

(5) When a carrier evaluation indicates deficiencies of such magnitude that the continued participation in traffic is unacceptable, action will be taken to suspend the carrier and/or recommend carrier disqualification.

b. Base Closure/Realignment.

(1) In cases where the gaining activity will begin operation of the TDRs at the beginning of a performance period/rate cycle, the above rules apply. Individual scores received at the closing/realigned activity and the gaining activity will be added together at the gaining activity to give the carrier one semiannual score for all shipments moved by a single carrier.

(2) In the cases where areas are consolidated in the middle of a rate cycle, the gaining activity will maintain separate TDRs for each area until the next rate cycle begins so that the carrier's current rate and score can be maintained. At the end of the performance cycle, scores from all areas will be added together to give the carrier one semiannual score for each type of service.

c. Evaluation and Traffic Denial.

(1) A carrier's score is calculated semiannually based on DD Forms 1780 mailed to the carrier during the evaluation period. The evaluation periods and effective date for the award of traffic are:

Evaluation Period	Effective Date	Rate/Performance Cycle
ITGBL:		
16 Jan-15 Jul	1 Oct	1 Oct- 31 Mar
16 Jul-15 Jan	1 Apr	1 Apr- 30 Sep
TGBL:		
16 Feb-15 Aug	1 Nov	1 Nov- 30 Apr
16 Aug-15 Feb	1 May	1 May- 31 Oct

(2) Carriers failing to meet the minimum semiannual shipment score of 90 will be placed on traffic denial starting at the beginning of the next rate cycle. The degree to which a carrier has been unable to meet the performance standards will determine the period of time for which the carrier will be denied the opportunity to participate in the award of traffic from a TO, as shown:

Semiannual Evaluation Score	Traffic Denial Period	ITGBL Reinstatement Dates	Domestic Reinstatement Dates
80 - 89.99	60 Days	1 Dec/1 Jun	1 Jul/1 Jan
70 - 79.99	120 Days	1 Feb/ 1 Aug	1 Sep/1 Mar
0 - 69.99	Entire Rate Cycle	1 Apr/1 Oct	1 Nov/1 May

(3) Carriers placed in a traffic denial status will be returned to the individual TDRs automatically when the prescribed time of traffic denial expires. Carriers returning from traffic denial will be placed on the TDRs at an administrative score of 90 and at the highest cumulative tonnage of any other like carrier (within the rate groups) on the TDR.

(4) An otherwise qualified carrier which did not receive a semiannual evaluation from the TO during the previous performance cycle will be deemed a “satisfactory” participant for that specific type of service (i.e. TGBL, ITGBL HHG or UB) and placed on the TDR at the new rate level. The carrier’s last semiannual score will be carried forward for the new rate cycle. For example, a carrier with a score of 91 with no shipments evaluated during the previous rate cycle would start the new rate cycle with a score of 91.

(5) A “U” symbol will be used to identify carriers on the TDR placed in traffic denial.

(6) The following examples show how the TO will determine whether or not a carrier will be placed in traffic denial status:

(a) Carrier X has an average shipment score of 91 on all UB, an average shipment score of 72 on all ITGBL HHG shipments for the period ending 15 July; and an average score of 64 on all TGBL shipments for the period ending 15 August. Carrier X has met the performance standards for UB shipments and will remain eligible to participate in codes 7, 8 and J, if otherwise qualified. Carrier X did not meet the performance standards on HHG shipments, and will be placed in a traffic denial status effective 1 October for codes 3, 4, 5, 6, and T and on 1 November for Codes 1 and 2. The carrier will be reinstated to the appropriate TDRs by the TO on 1 Feb for Codes 3, 4, 5, 6, and T with an average shipment score of 90 and on 1 May the carrier will be reinstated for Codes 1 and 2 with an average shipment score of 90.

(b) Carrier Z is a domestic carrier only and has an average shipment score of 83 on TGBL HHG shipments for the period ending 15 August. Carrier Z will be placed in traffic denial status effective 1 November and will be automatically reinstated on 1 January with an average shipment score of 90 at the highest cumulative tonnage. Carrier Z will then be considered eligible to receive traffic.

d. Carrier Notification.

(1) Carriers will be advised of their average shipment score and performance status at the end of the semiannual evaluation process, but not later than 30 calendar days prior to the effective date of the following six-month rate cycle. Scores of those carriers who fall below 90 will be sent, by certified or registered mail, return receipt requested. A copy of the semiannual evaluation will be maintained in the carrier's performance file.

(2) The origin TO will use the DD Form 2497 as:

(a) A work sheet for use in calculating the average shipment score, and to document how the average shipment score is derived.

(b) A management report used to monitor, review, and evaluate carrier performance.

(c) The means by which to advise the carrier of the results of the formal semiannual evaluation process.

(d) The primary worksheet for preparing the semiannual report to HQ MTMC.

(3) If a carrier does not receive a shipment evaluation during the evaluation period, there is no requirement to prepare a DD Form 2497. A postcard or form letter may be used to notify the carrier that no shipments were evaluated and what the carry over, semiannual score will be.

(4) TOs may substitute documentation in automated data processing format, if all the essential information required on the DD Form 2497 is included in the format the TO provides.

(5) Carriers may request their overall ranking among carriers based on their semiannual score, i.e., 14th of 121 carriers.

8. Appeal Procedures as a Result of Semiannual Evaluation.

a. The carrier will be afforded a period of 45 calendar days from the date on the DD Form 2497 in which to appeal the semiannual performance score. TOs will use the US postmark date on the envelope from the carrier to determine if the 45-day calendar appeal period has been met. In the case of express mail, the date the appeal was released to the express company will be considered the same as an US postmark. A facsimile may be used to meet the 45-day appeal suspense. Should the carrier elect to appeal the semiannual evaluation score, the following examples show reasonable grounds for appeal:

(1) The TO failed to include all shipments scored and mailed to the carrier during the evaluation period. The carrier is required to substantiate such an appeal by providing a legible copy of the DD Form 1780, which the TO may have failed to include in computing the semiannual performance evaluation.

(2) The TO failed to adjust the score on an individual shipment shown on DD Form 2497, as a result of a successful appeal by the carrier on that shipment. The carrier must provide documentation to clearly substantiate the appeal.

(3) Mathematical or administrative errors on DD Forms 1780, or listed on the DD Form 2497, or any errors on the DD Form 2497.

b. Carrier Appeal of a Semiannual Evaluation.

(1) The TO must either inform the carrier that the appeal is granted, or provide a reason for its denial. The TO's response to the carrier must be forwarded not later than 45-days from the US postmark date of the carrier's letter of appeal.

(2) An appeal, denied by the TO, may be further appealed by the carrier to HQ MTMC. Initiation of this appeal is the responsibility of the carrier. The appeal must be factual, and must address the reasons why the TO's denial of the initial appeal was not warranted. An information copy of this appeal must be forwarded, by the carrier, to the TO. In all such cases, the decision of HQ MTMC will be final.

(3) If a carrier's appeal to a Carrier Evaluation Work Sheet/Report is upheld, the carrier's average shipment score and period of traffic denial (if any) will be adjusted. Further, in cases where the appeal is upheld and the resulting change in the average shipment score moves the carrier from an unsatisfactory to a satisfactory position, the carrier will be reinstated on the TDR and awarded sufficient tonnage to reestablish the carrier's relative position among other carriers on the TDR.

9. Turned Back or Pulled Back Shipments.

a. Overbooking occurs when the carrier notifies the origin TO that the carrier is unable to service a shipment previously accepted. The carrier will be charged administrative tonnage on the TDR when the carrier turns back a shipment to the TO as a result of overbooking. If the TO must pull back a shipment and retender the shipment to another carrier, or the carrier fails to pickup the shipment on the agreed pickup date, administrative tonnage will be charged. A carrier must receive permission from the TO to turn back a shipment.

b. A shipment that has been turned back by the carrier, seven days or less prior to the established pickup date, will be scored at an administrative score of 40 points. A shipment turned back by the carrier, after it has been packed and/or picked up by the local agent, will also receive an administrative score of 40 points. The remarks section of DD Form 1780 will contain a statement to the effect that the carrier turned the shipment back. The carrier will be charged administrative weight on the TDR.

c. Shipments pulled back or turned back through no fault of the carrier are not scored and no tonnage is charged (i.e., member's/employee's orders have changed, shipment is bug infested). When the TO determines that shipments must be pulled back from a carrier to protect the interests of the Government, the shipments will not be scored and no tonnage charged. For example, the TO imposes an immediate suspension on a carrier and he/she has already awarded three shipments for pickup. The TO pulls back the shipments, but does not score the shipments.

d. Repeated turn backs will be considered adequate grounds for suspension action.

e. If it is evident that an agent is the cause for the turn back or pull back, the agent will be disqualified.

f. Shipments that have been pulled/turned back within seven days or less of the pickup date are considered short notice shipments when being reallocated to a new carrier. Such shipments will not be charged against the new carrier on the TDR. Such shipments will be coded on the TDR, for identification and audit purposes as follows: "PG" for pullback or "TC" for turnback on automated TDRs, or "B" for manual TDRs.

10. Long Delivery Out of SIT.

a. A carrier, having operating authority to the new destination, is obligated to forward the shipment to the new destination. Transit times, IAW this Regulation, will be used as a guide for long deliveries. Long delivery out of SIT may not be used for shipments requiring further over-ocean movement. These shipments must be terminated at the SIT facility and reshipped.

b. Long delivery out of SIT is a shipment delivering from a destination SIT warehouse more than 30 miles from the warehouse in the domestic program; and HHG more than 50 miles, and UB more than 30 miles in the international program.

c. The destination TO will order long deliveries out of SIT by preparing a Certificate for Delivery from Storage In Transit (SIT) (Figure 405-3). A delivery address will be obtained by the (first) destination TO before releasing any shipment out of destination SIT. If no delivery address is provided, the Certificate for Delivery from Storage In Transit (SIT) must include a statement as to how many days SIT were used and how many days SIT are authorized. The destination TO (first TO) as specified on the PPGBL, will send an information copy of the Certificate for Delivery from Storage In Transit (SIT) to the origin TO to make them aware of the new destination. The first destination TO is also responsible for ensuring that the newly established destination TO (second destination TO) receives a copy of DD Form 1780, and any other pertinent information, for final destination evaluation. The second destination TO will complete the evaluation at final destination and return the necessary forms to the origin TO within 90 days of shipment delivery.

d. The carrier will prepare a DD Form 619 (Figure 401-2) for billing purposes that must include all accessorial services incidental to the delivery of the shipment. The carrier will return the completed DD Form 619 to the TO that authorized the services. The TO will verify and sign the form, keeping one copy in the permanent shipment file, and returning the remainder to the carrier.

e. Scoring long delivery shipments will be based on the original PPGBL or PPGBL correction notice. The first destination TO, as specified on the PPGBL, when issuing the Certificate for Delivery from Storage In Transit (SIT) will notify the origin TO to make them aware of the new destination. The first destination TO is responsible for ensuring that the newly established destination TO (second destination TO) receives a copy of DD Form 1780, and any other information for final destination evaluation. The second destination TO will complete the evaluation at destination and return the necessary forms to the origin TO within 90 days of delivery.

f. A missed RDD, established on the Certificate for Delivery from Storage In Transit (SIT), will be considered a TOS violation. Points will not be deducted on the shipment score. Only one letter of warning or suspension will be issued per shipment.

D. TO ACTIONS AS A RESULT OF QUALITY ASSURANCE IMPOSED SANCTIONS.

AGENT DISQUALIFIED/CARRIER IN NONUSE	CARRIER SUSPENSION	CARRIER IMMEDIATE SUSPENSION (LETTER OF WARNING NOT REQUIRED)	RETURN OF LOI
No further traffic will be tendered to carrier. No SIT will be authorized to the disqualified agent.	No further traffic will be tendered.	No further traffic will be tendered.	No further traffic will be tendered.
TO has option of retendering shipments still at origin.	TO has option of retendering shipments still at origin.	TO should rebook shipments still at origin unless member/ employee inconvenience will occur.	TO has option of retendering shipments at origin.
Shipments in pipeline remain with carrier.	Shipments in pipeline remain with carrier.	Shipments in pipeline remain with carrier.	Shipments not picked up will be pulled back. TO has option of terminating all shipments in the pipeline.

E. HQ MTMC ACTIONS

DISQUALIFICATION	REMOVAL FROM DOD PROGRAM	APPROVAL REVOCATION
	A	B
Unsatisfactory Performance	Carrier can complete movement of shipments.	Carrier cannot complete movement of shipments in pipeline.
No further traffic will be tendered.	No further traffic will be tendered.	No further traffic will be tendered.
TO may rebook shipments still at origin unless member/employee inconvenience will occur (unless otherwise directed by MTMC).	Rebook all shipments still at origin.	Rebook all shipments still at origin.
Shipments in pipeline remain with carrier (unless otherwise directed by MTMC).	Shipments in pipeline remain with carrier (unless otherwise directed by MTMC)	Terminate and retender all shipments in pipeline.

F. SHIPMENT EVALUATION AND INSPECTION RECORD (DD FORM 1780).

1. The following procedures will be used when preparing DD Form 1780:

a. BLOCK 1 - DATE. Enter the date the form is initiated by the origin TO.

b. BLOCK 2 – MEMBER'S NAME. Enter the name and social security account number (SSAN) of the member/employee. The identification will be expressed Last Name, First Name, Middle Initial, and SSAN format, i.e. JONES, John J., 123-45-6789.

c. BLOCK 3 - GRADE/RANK. Enter the member's/employee's pay grade or rank. Pay grades should be expressed as E-for Enlisted Member, W-for Warrant Officers, O-for Commissioned Officers, and GS and GM-for DOD Civilians.

d. BLOCK 4 - COMPONENT. Enter the member's/employee's branch of Service/Agency in the following alpha codes:

(1) A-US Army

(2) F-US Air Force

(3) M-US Marine Corps

(4) N-US Navy

(5) P-Coast Guard

e. BLOCK 5 - CARRIER NAME - SCAC. Enter the carrier's name. Use abbreviations only if the carrier's identity is maintained. On the right hand side, in upper case letters, enter the carrier's assigned Standard Carrier Alpha Code (SCAC).

f. BLOCK 6 - PPGBL/ORDER NUMBER. Enter the assigned PPGBL number for shipments moving on a PPGBL. Enter the service order number for shipments moving on a service order.

g. BLOCK 7 - ORIGIN TO - BLOC. Enter the name, state, and ZIP code (or APO/FPO number) of the origin TO. Use abbreviations only if the TO's identity is maintained. On the right hand side, in upper case letters, enter the TO's assigned Bill of Lading Code (BLOC) found in the Personal Property Consignment Instruction Guide (PPCIG).

h. BLOCK 8 - DESTINATION TO - BLOC. Enter the name, state, and ZIP code (or APO/FPO) of the destination TO. Use abbreviations only if the TO's identity is maintained. On the right hand side, in upper case letters, enter the TO's assigned BLOC found in the PPCIG.

i. BLOCK 9 - CODE OF SERVICE. Enter the code of service by which the shipment is being made. Identify domestic shipments as "A" for interstate shipments and "B" for intrastate shipments.

j. BLOCK 10 - PICKUP ADDRESS. Enter the number, street name, city, state, and ZIP code where the shipment was picked up. Use abbreviations only if the identity of the pickup address is maintained. Note the Storage Company, lot number, and storage weight if the shipment is coming out of nontemporary storage.

k. BLOCK 11 - DELIVERY ADDRESS. Enter the number, street name, city, state, and ZIP code where the shipment was delivered. Use abbreviations only if the identity of the delivery address is maintained.

l. BLOCK 12 - PICKUP DATE. Enter the pickup date indicated on the PPGBL.

m. BLOCK 13 - MISSED PICKUP. Did the shipment miss the agreed pickup date as stated on the PPGBL? Enter an "X" at YES or NO.

n. BLOCK 14 – REQUIRED DELIVERY DATE (RDD). Enter the RDD established by the origin TO as stated on the PPGBL.

o. BLOCK 15 - MISSED RDD - # DAYS. Enter an "X" at YES or NO if the shipment failed to meet the agreed RDD as stated on the PPGBL. In the right hand side, indicate the number of days the shipment was delayed by counting from the lst day after the RDD up to the actual delivery date, i.e. RDD is 3 Mar, shipment delivered 5 Mar, the shipment is delayed two days. Entry should look like this: "YES/2 DAYS".

p. BLOCK 16 - ESTIMATED LOSS/DAMAGE. Enter the member's/employee's estimated dollar amount for loss and/or damage incurred during the move. If no loss and/or damage occurred, enter a numeric zero. Do not leave this block blank.

q. BLOCK 17 - DATE IN STORAGE-IN-TRANSIT (SIT). Enter the date the shipment went into SIT. In case of split shipments, the delivery date for SIT would be the date the final increment delivers. Serial delivery dates of split shipment increments, with piece counts should be annotated in Remarks section (Block 25) to provide an audit trail for later shipment evaluation.

r. BLOCK 18 - DATE OUT OF SIT. Enter the date the shipment was delivered out of SIT.

s. BLOCK 19 - DELIVERY DATE. Enter the date the shipment was delivered to the final destination/residence. In the case of split shipments, the shipment is not considered to be completely delivered until the final increment of the shipment has been delivered. If there is a split shipment, enter the date of delivery of the final increment of the shipment in this block.

t. BLOCK 20 - WEIGHT. Enter the weight of the shipment if known, otherwise leave blank.

u. BLOCK 21 – LOSS/DAMAGE - TYPE - SOURCE. Enter the type of loss/damage incurred by using the following alpha codes:

N - No loss or damage.
H - High value loss.
W - Water damage.
D - All damage other than water damage.
L - All other types of loss.

If there is both loss and damage enter the code for the category that appears to be the most predominate. Enter the data source for loss/damage by using the following alpha codes for documents used:

D - Joint Statement of Loss or Damage at Delivery, DD Form 1840.
C - Claims data, either a DD Form 1840R or adjudicated claim.
X - Other Documents (DD Form 619, DD Form 1843, etc.).
I - Inspection by TO.

v. BLOCK 22 - CUSTOMER SATISFACTION. Mark box with an “X” (YES/NO or UNK for unknown) to indicate the member’/employee’s feelings about the service provided by the carrier. The indication of customer satisfaction or dissatisfaction may be determined through the use of a local customer satisfaction report or through direct contact with the member/employee. Any indication of unsatisfactory service must be brought to the attention of the origin TO in the event corrective action may be necessary. Customer satisfaction may be annotated by either or both the origin and destination TOs.

w. BLOCK 23 – TENDER OF SERVICE VIOLATIONS CODE(S). Enter Alpha codes from Block 24 for specific violations of the TOS. Do not enter TOS paragraph numbers in this Block. When documenting failures to meet the RPDD or the weight/cube data reporting requirements, input code “Z” and indicate in the remarks block that the code is being used to document these failures.

x. BLOCK 24 - SHIPMENT INSPECTION. Check violations as noted. Explanations are required in the remarks section for every TOS violation checked.

y. BLOCK 25 - REMARKS. Enter the paragraph number for each TOS violation and explain the violation. Use this Block to note any information that may be important in evaluating the carrier.

z. BLOCK 26 - PRINTED NAME/SIGNATURE OF ORIGIN INSPECTOR. Print or type origin inspectors name below signature. If no inspection was performed, enter "Not inspected at origin". Enter Date Signed.

aa. BLOCK 27 - PRINTED NAME/SIGNATURE OF DESTINATION INSPECTOR. Print or type destination inspectors name below signature. If no inspection was performed, enter "Not inspected at destination". Enter Date Signed.

bb. BLOCK 28 - PRINTED NAME/SIGNATURE OF SHIPPING OFFICE REPRESENTATIVE. Print or type the name of the shipping office representative below the signature. This Block must be signed when TOS violations are noted, or the score is less than 100. Scores of 100 with no violations do not need to be signed. Enter Date Signed.

cc. BLOCK 29 - SHIPMENT EVALUATION. Mark an "X" in box if shipment was satisfactory or unsatisfactory. This notifies the carrier that while this individual shipment may not warrant a LOW, it is still not up to the level of service expected. All shipments with scores under 90 must be marked unsatisfactory.

dd. BLOCK 30 - SHIPMENT SCORE. Enter the final individual shipment score. This must be done by the origin TO once the evaluation is completed.

2. DD Form 1780 Procedures:

a. DD Form 1780 is the only form that will be used to evaluate and score an individual shipment.

b. The origin TO will prepare and provide a copy of the DD Form 1780 to the destination TO to arrive prior to the shipment RDD and establish a suspense for receipt of delivery information. Upon delivery, the destination TO will input the delivery information into the automated system, or annotate the DD Form 1780 and return a copy with the DD 1840R, if available, to the origin TO. If the origin TO has not received the delivery information by the suspense date, the origin TO will forward a duplicate copy of the DD Form 1780 to the destination TO requesting status. Suspense will be reset for the 11th month from pickup for scoring purposes. Upon receipt of the destination information, and not later than during the 11th month from pickup, the shipment evaluation will be performed.

c. Completed DD Form 1780 distribution procedures:

(1) Original to carrier.

(2) Copy to carrier's performance file.

(3) Distribution to local agent is optional, to be determined by each activity.

d. At no time will copies of the DD Form 1780 be forwarded directly to HQ MTMC, on a routine basis. The DD Form 1780 will be forwarded to HQ MTMC when a single form, or series of forms, are being used as supporting documentation in requesting disqualification of a carrier.

SHIPMENT EVALUATION AND INSPECTION RECORD			1. DATE (YYYYMMDD)	REPORT CONTROL SYMBOL
2. MEMBER'S NAME (Last, First, Middle Initial)	3. GRADE/ RANK	4. COMPONENT	5. CARRIER NAME	SCAC
6. PPGBL/ORDER NUMBER	7. ORIGIN PPSO	GBLOC	8. DESTINATION PPSO	GBLOC
9. CODE OF SERVICE				
10. PICKUP ADDRESS (Street, City, State and ZIP Code) NON-TEMPORARY STORAGE (X)			11. DELIVERY ADDRESS (Street, City, State and ZIP Code)	
12. PICKUP DATE (YYYYMMDD)	13. MISSED PICKUP (X one) YES NO	14. REQUIRED DELIVERY DATE (RDD) (YYYYMMDD)	15. MISSED RDD (X one) YES (No. of days) NO	16. ESTIMATED LOSS/ DAMAGE
17. DATE IN STORAGE-IN-TRANSIT (SIT) (YYYYMMDD)	18. DATE OUT OF SIT (YYYYMMDD)		19. DELIVERY DATE (YYYYMMDD)	20. WEIGHT
21. LOSS/DAMAGE (If applicable)		22. CUSTOMER SATISFACTION (X one)		23. TENDER OF SERVICE VIOLATIONS CODE(S)
a. TYPE	b. SOURCE	YES NO UNKNOWN		

24. SHIPMENT INSPECTION (Explain all marked Tender of Service (T/S) Violations in Remarks.)

(X)	T/S CODE	VIOLATION	(X)	T/S CODE	VIOLATION
	A	FAILED TO PERFORM PREMOVE SURVEY (If applicable)		N	FAILED TO PROVIDE REQUIRED DOCUMENTS TO MEMBER
	B	IMPROPERLY PACKED/LOADED SHIPMENT		O	FAILED TO UNPACK/REASSEMBLE
	C	IMPROPER/INADEQUATE PACKING MATERIAL		P	FAILED TO COMPLY WITH SIT REQUIREMENTS
	D	PREPARED INVENTORY IMPROPERLY		Q	CONTAINERS NOT PROPERLY MARKED
	E	PREPARED DD619/DD1840 IMPROPERLY		R	FAILED TO PROTECT CONTAINERS FROM WEATHER
	F	USED UNQUALIFIED PERSONNEL		S	FAILED TO PACK, WEIGH AND ENTER PBP&E ON INVENTORY/PPGBL
	G	IMPROPERLY SERVICED/DESERVICED APPLIANCES		T	FAILED TO REPORT SHIPMENT IN WEEKLY REPORT
	H	FOLDED/FAILED TO PROPERLY ROLL RUG(S)		U	UB/HHG CONTAINERS FAILED TO MEET SPECIFICATIONS
	I	FAILED TO RECORD LOSS/DAMAGE		V	FAILED TO NOTIFY PPSO OF INABILITY TO MEET RDD
	J	FAILED TO WEIGH SHIPMENT AS PRESCRIBED BY ICC		W	FAILED TO TRACE WITHIN 24/48 HOURS (As applicable)
	K	FAILED TO REMOVE PACKING MATERIALS/DEBRIS		X	FAILED TO NOTIFY PPSO OF ARRIVAL/DELIVERY
	L	FAILED TO REWEIGH WHEN REQUESTED		Y	FAILED TO CONTAINERIZE AT RESIDENCE
	M	FAILED TO PROVIDE REQUIRED DOCUMENTS TO PPSO		Z	OTHER (See Remarks)

25. REMARKS

26. PRINTED NAME/SIGNATURE OF ORIGIN INSPECTOR	DATE SIGNED	29. SHIPMENT EVALUATION (X one)
27. PRINTED NAME/SIGNATURE OF DESTINATION INSPECTOR	DATE SIGNED	SATISFACTORY UNSATISFACTORY
28. PRINTED NAME/SIGNATURE OF SHIPPING OFFICE REPRESENTATIVE	DATE SIGNED	30. SHIPMENT SCORE

DD FORM 1780, SEP 1998 (EG) PREVIOUS EDITION IS OBSOLETE.

Figure O-1. DD Form 1780, Shipment Evaluation and Inspection

MATRIX FOR SCORING INDIVIDUAL SHIPMENTS

The following table assumes that the carrier has earned 20 points for meeting the pickup date specified on the PPGBL. If the carrier missed the pickup date, 20 points should be deducted from the shipment score shown on the matrix.

DAYS LATE	ESTIMATED $ LOSS/DAMAGE										
	$0	$1 - $100	$101 - $200	$201 - $300	$301 - $400	$401 - $500	$501 - $600	$601 - $700	$701 - $800	$801 - $900	Over $900
0	100	98	96	94	92	90	84	78	72	66	60
1	96	94	92	90	88	86	80	74	68	62	56
2	92	90	88	86	84	82	76	70	64	58	52
3	88	86	84	82	80	78	72	66	60	54	48
4	84	82	80	78	76	74	68	62	56	50	44
5	80	78	76	74	72	70	64	58	52	46	40
6	76	74	72	70	68	66	60	54	48	42	36
7	72	70	68	66	64	62	56	50	44	38	32
8	68	66	64	62	60	58	52	46	40	34	28
9	64	62	60	58	56	54	48	42	36	30	24
10+	60	58	56	54	52	50	44	38	32	26	20

DD FORM 1780 (BACK), SEP 1998

Figure O-1. DD Form 1780, Shipment Evaluation and Inspection (Cont'd)

CARRIER EVALUATION WORKSHEET/REPORT (DD FORM 2497).

The following procedures will be used when preparing and distributing a DD Form 2497:

3. NAME OF CARRIER and SCAC. Enter the carrier's name and the carrier's Standard Carrier Alpha Code (SCAC), in upper case letters.

4. TYPE. Check either ITGBL for international shipments or TGBL for domestic shipments.

5. PERIOD COVERED. Enter dates.

6. SERVICE. Check either UB for unaccompanied baggage (Codes J, 7, 8), or HHG for household goods (Codes 3, 4, 5, 6, T, or 1, 2,).

7. NAME OF ORIGIN SHIPPING OFFICE. Enter the name, state, and ZIP code (or APO/FPO number in the clear when authorized) of the preparing TO. Abbreviation is authorized as long as the identity of the activity is maintained. Enter the Bill of Lading Code (BLOC) for the origin, in upper case letters, in the upper right hand corner of this Block.

8. NAME OF PROPERTY OWNER. Enter the name of the member/employee expressed in last name, first name, and middle initial format. For example, Smith, Sally S.

9. SHIPMENT PICKUP DATE. Enter the date the shipment was picked up at origin.

10. PPGBL NUMBER. Enter the number of the PPGBL in the Block provided. For shipments moving on a service order, enter the service order number.

11. SHIPMENT EVALUATION.

a. PICKUP. Enter "Yes" if shipment met its scheduled pick up date, and "No" if it did not.

b. RDD. Enter number of days shipment was late. If shipment was on time, enter a numeric "zero".

c. L/D. Enter estimated amount of loss and/or damage.

d. If a shipment is being scored as a turnback or pullback, enter either "turnback" or "pullback" across 9 a, b and c.

12. POINTS. Enter the individual numerical shipment score. Total the number of points for each individual page at the bottom of column 10 under "Total Points This Page". NOTE: Continue on subsequent pages as necessary. Insure that continuation pages are numbered (i.e., Page __ of __) in the space provided at the top of the form. After recording the data for all DD Forms 1780 contained in the carrier's performance file for the performance period enter, "Last Shipment Entry" on the next line after the last entry.

13. NUMBER OF SHIPMENTS SCORED. Once the evaluation period is over, enter the total number of shipments scored.

14. AVERAGE SHIPMENT SCORE. Enter the carrier's score for the evaluation period. To derive the average shipment score, add together all the scores in column 10, (Points), and divide by the total number of shipments in Column 11, (NUMBER OF SHIPMENTS SCORED). Scores will not be rounded. Scores will be recorded to the second decimal place, for example, 91.79 or 99.99.

15. CARRIER STATUS. If the average shipment score is 90 or above, mark satisfactory; if 89.99 or below, mark unsatisfactory

16. NAME OF TO. Self explanatory.

a. SIGNATURE OF TO. Self explanatory.

b. DATE. This will be the same date the form is mailed to the carrier.

17. NUMBER OF SUSPENSIONS. Show total number of regular and/or immediate suspensions for the carrier imposed during the period covered.

18. TRAFFIC DENIAL PERIOD. If carrier status is unsatisfactory, enter traffic denial period in number of days, for example 60 days or 120 days.

19. REINSTATEMENT DATE. Enter the date the carrier will be reinstated to the TDRs.

CARRIER EVALUATION WORKSHEET/REPORT	REPORT CONTROL SYMBOL	PAGE OF PAGES

1a. NAME OF CARRIER	b. SCAC	2. TYPE (X)		3. PERIOD COVERED (YYYYMMDD)		4. SERVICE (X)	
			ITGBL	a. FROM	b. TO		UB
			IGBL				HHG

5. NAME OF ORIGIN SHIPPING OFFICE

6. NAME OF PROPERTY OWNER	7. SHIPMENT PICKUP DATE (YYYYMMDD)	8. PPGBL NUMBER	9. SHIPMENT EVALUATION			10. POINTS
			a. PICKUP	b. RDD	c. L/D	
					TOTAL POINTS THIS PAGE	

ANY SHIPMENTS ON WHICH EVALUATIONS HAVE NOT BEEN COMPLETED HAVE BEEN EXCLUDED IN COMPUTING YOUR AVERAGE SHIPMENT SCORE.	11. NUMBER OF SHIPMENTS SCORED	12. AVERAGE SHIPMENT SCORE	13. CARRIER STATUS (X)
			SATISFACTORY
			UNSATISFACTORY
14a. NAME OF SHIPPING OFFICE REPRESENTATIVE (Last, First, Middle Initial)	b. SIGNATURE		c. DATE SIGNED (YYYYMMDD)

15. NUMBER OF SUSPENSIONS		16. TRAFFIC DENIAL PERIOD (Number of days)	17. REINSTATEMENT DATE (YYYYMMDD)
a. REGULAR	b. IMMEDIATE		

DD FORM 2497, SEP 1998 PREVIOUS EDITION IS OBSOLETE.

Figure O-2. Carrier Evaluation Worksheet/Report

INSTRUCTIONS FOR PREPARING A DD FORM 1814, CARRIER NOTICE OF WARNING/SUSPENSION/REINSTATEMENT/CANCELLATION.

20. Preparing the DD Form 1814.

a. In the title block, check type of action.

b. Enter the date the form is initiated by the TO.

c. Enter complete address of TO to include ZIP code and BLOC.

d. Enter complete name and address of carrier to include SCAC.

e. Section 1 - Shipment Data

(1) Enter name of personal property owner; Last, First, Middle initial.

(2) Enter PPGBL number.

(3) Enter pickup date.

(4) Enter destination city or activity and state.

(5) Continue in remarks section if necessary.

f. Section 2 - Carrier Action

(1) Check box for action taken.

(2) When the DD Form 1814 is used as a LOW or Suspension, note all TOS violations, to include paragraph number, with explanations.

(3) Type or print name of TO officer.

(4) Signature of TO officer.

(5) Enter effective date of action.

21. Distribution of DD Form 1814.

a. LOW issued at a military air or water terminal. When issued by a military air or water terminal commander, an original and two copies of DD Form 1814 will be prepared and distributed as follows:

(1) The original LOW must be forwarded to the home office of the carrier.

(2) One copy must be forwarded to the origin TO for placement in the carrier's performance file.

(3) One copy for the terminals files.

b. LOW/suspension issued by the TO. The DD Form 1814 will be distributed as follows:

(1) The original will be sent to the home office of the carrier. LOW for Suspension must be forwarded by certified mail, return receipt requested.

(2) When the action results from a recommendation by the destination TO, an information copy will be sent to the destination TO.

(3) One copy must be retained in the carrier's performance file.

(4) One copy provided to the carrier's agent.

c. Letters of Reinstatement/Cancellation. After expiration of the minimum 30 day suspension period and when the TO is satisfied that the carrier has taken adequate corrective action, the TO will issue a letter of reinstatement to advise the date reinstatement will be effective. A DD Form 1814 will be issued as soon as possible for any action that is canceled or retracted (for example, a suspension that was successfully appealed by a carrier). An original and two copies of the letter of reinstatement or cancellation will be prepared and distributed as follows:

(1) The original DD Form 1814 will be forwarded to the home office of the carrier.

(2) One copy provided to the carrier's local agent.

(3) One copy must be retained in the carrier's performance file.

CARRIER NOTICE OF				1. DATE *(YYYYMMDD)*
☐ WARNING	☐ SUSPENSION	☐ REINSTATEMENT	☐ CANCELLATION	

2. FROM	3. TO

SECTION I - SHIPMENT DATA

4. PROPERTY OWNER'S NAME	5. PPGBL	6. PICKUP DATE *(YYYYMMDD)*	7. DESTINATION

SECTION II - CARRIER ACTION

8.

☐ a. DUE TO THE VIOLATIONS CITED BELOW, YOU ARE HEREBY WARNED THAT A REPETITION OF THE TYPE OF SERVICE PROVIDED IN SECTION I ABOVE WILL SERVE AS A BASIS FOR YOUR SUSPENSION.

☐ b. DUE TO THE VIOLATIONS CITED BELOW, YOUR COMPANY IS SUSPENDED AT THIS ACTIVITY UNTIL PROOF OF CORRECTIVE ACTION IS PROVIDED.

☐ c. YOUR COMPANY WILL BE REINSTATED TO THE LIST OF CARRIERS ELIGIBLE TO SERVE THIS ACTIVITY ON THE DATE SHOWN BELOW.

9. TENDER OF SERVICE VIOLATIONS/REMARKS

10a. NAME OF PERSONAL PROPERTY SHIPPING OFFICER *(Last, First, Middle Initial)*	b. SIGNATURE	11. EFFECTIVE DATE OF ACTION *(YYYYMMDD)*

DD FORM 1814, SEP 1998 (EG) PREVIOUS EDITION IS OBSOLETE.

Figure O-3. DD Form 1814, Carrier Notice of Warning/Suspension

INSTRUCTIONS

a.

(1) The original Letter of Warning shall be forwarded to the home office of the carrier.

(2) One copy shall be forwarded to the origin TO for placement in the carrier's performance file.

(3) One copy for the terminal's file.

b. **Letters of Warning/Suspension Issued by the TO**. The DD Form 1814 will be distributed as follows:

(1) The original will be sent to the home office of the carrier. Letters of Warning for Suspension must be forwarded by certified mail, return receipt requested.

(2) When the action results from a recommendation by the destination TO, an information copy will be sent to the destination TO.

(3) One copy shall be retained in the carrier's performance file.

(4) One copy provided to the carrier's agent.

c. **Letters of Reinstatement/Cancellation**. After expiration of the minimum 30 day suspension period and when the TO is satisfied that the carrier has taken adequate corrective action, the TO shall issue a letter of reinstatement to advise the date reinstatement will be effective. A DD Form 1814 will be issued as soon as possible for any action that is cancelled or retracted (for example, a suspension that was successfully appealed by a carrier). An original and two copies of the letter of reinstatement or cancellation shall be prepared and distributed as follows:

(1) The original DD Form 1814 shall be forwarded to the home office of the carrier.

(2) One copy provided to the carrier's local agent.

(3) One copy shall be retained in the carrier's performance file.

DD FORM 1814 (BACK), SEP 1998

Figure O-3. DD Form 1814 (Back), Carrier Notice of Warning/Suspension (Cont'd)

APPELLATE ADDRESSES

Inquiries and appeals should be directed to the office with the area of responsibility.

Addresses:

All CONUS Activities

Commander
Headquarters, Military Traffic Management Command
Hoffman Building II, ATTN: MTPP-HQ
200 Stovall Street
Alexandria, Virginia 22332-5000
Phone: (703) 428-3001 / DSN 328-3001

For installations located in Central Europe, England and the Mediterranean:

HQ USEUCOM/MTMC
598th TRANS GP
ATTN: PPO-E
Unit 30400
APO AE 09131

Phone: 0711-680-8248/DSN 430-8248
Phone from outside Germany: 49-711-680-8248

For installations located in Alaska:

Directorate of Logistics
ATTN: APVR-RDL-TP
977 Davis Highway
Fort Richardson AK 99505-7000
Phone: (907) 384-1833/DSN: 317-384-1833

For installations located in the Pacific, to include Hawaii,

Korea, Japan and Guam:

Commander
ATTN: MTWPA-OP-PP
599th US Army Transportation Group
Bldg 204
Wheeler Army Air Field HI 96854-5155
Phone: (808) 656-3741/DSN 315-456-3741

G. REPORTING PROCEDURES

1. PPSOs must forward a semi-annual report of all carriers' TQAP scores for HHG and UB to HQ MTMC/MTPP-HQ.

2. The purpose of the report is to provide data to HQ MTMC to determine policy issues, establish transit times, convene carrier review boards, adjust scoring and suspension policies, determine the effectiveness of quality assurance programs, and detect operational problems or trends in different rate channels.

3. The preferred method of reporting scores to HQ MTMC is electronically through the automated system. If electronic means are not available, mail is acceptable. Reports are due not later than the first day of each new rate cycle.

APPENDIX P

GUIDELINES FOR THE QUALITY CONTROL INSPECTOR

A. Skills Needed to Inspect.

1. A Government Motor Vehicle operator's identification card or license for a light truck or staff car if required by the installation.

2. An inspector must have the ability to:

a. Communicate effectively in writing and orally. Every observation requires a record for later evaluation of the carrier or contractor or as information for use by the member/employee or the Government. These reports must be clear, concise, and accurate. Inspectors, because of their direct contact with the member/employee, must be adept at personal property counseling.

b. Work effectively under stress. The inspector must arbitrate differences between carrier personnel and member/employee without being intimidated by either party. Decisions must often be made at the scene without coordination with higher authority. These decisions must be made based on broad working knowledge to avoid criticism and delays.

c. Prepare reports and other written technical material, including the task of evaluating procedures and suggestions for revision of regulations. Technical material must be technically correct, including content and grammar. Be fully familiar with automated system to input and retrieve information and forms.

d. Work independently and effectively plan day-to-day activities.

B. Responsibilities of the Inspector.

1. Observe, document, and evaluate carrier or contractor performance in moving personal property of Department of Defense personnel and ensure that carriers or contractors comply with service tenders, tariffs, contract specifications, and Government regulations used in handling this property.

2. Resolve controversial procedural problems involving the rights of members/employees and the requirements of carriers or contractors to perform desired services.

3. Advise members/employees on entitlements when questions arise after initial counseling.

C. Qualifications of the Inspector.

1. Experience. Experience as personal property counselors will provide authority and poise in dealing with members/employees of all pay grades.

2. Training. The inspector must be given sufficient training to have a broad understanding of every aspect of the personal property program, including automated systems. Transportation officers (Tos) must consider the applicants' training, education, experience, and growth potential

before placing the person in quality control duties. Applicants must have a transportation background and personal property experience. They must also have developed the communication skills required for counseling and be able to interpret and apply contract specifications and regulations to task requirements.

D. Equipment Needed to Inspect.

1. Vehicle. Vehicles may be military, General Services Administration (GSA), or privately owned vehicle (POV), or from a combination of these if it is advantageous to the Government. Employees for travel within or outside their duty station may use a POV on a reimbursable basis. Mileage rates are stated in the Joint Travel Regulations/Joint Federal Travel Regulations. Travel orders are not necessary. Payment can be certified after the fact using Standard Form 1164, Claim for Reimbursement for Expenditures on Official Business (Figure P-1). Use of a POV can be exclusive, provided the travel budget is so established, or POV can be used with a military or GSA vehicle to meet unforeseen needs such as nonavailability. Establishing a travel budget for other than military vehicles must be justified as advantageous to the Government. Nonavailability of Government vehicles can be used to justify the budget. A POV is the most flexible arrangement. However, the inspector must consent to use his or her POV and may refuse without any inference being drawn. When a POV is used, vehicles do not require maintenance and pooling.

2. Kit (briefcase). A briefcase to accommodate working papers, publications, maps, blank forms, magnifying glass, and tape measure is a necessity.

3. Camera with Flash. Instant printing cameras should be available for household goods inspectors. "A picture is worth a thousand words."

4. Pager/Cellular Phone. Bases near metropolitan areas will have access to commercial packet paging systems. If included in the budget, units can be obtained by monthly rental. Pagers have an advantage over telephone call-in procedures from residences of members/employees as telephones are often disconnected when moving. In some cases cellular telephones may be more practical when considering factors such as availability of services, costs, and the size of the area of responsibility. The ability to establish instant communication with the inspector for redispatch to locate members/employees during carrier free time on inbound shipments can save storage-in-transit money. Immediate access to the inspector by both the member/employee and the carrier creates a feeling of security in the community.

5. Badge or Nameplate. Inspectors should wear badges listing their name and also stating Quality Control Inspector.

6. Quality Control Inspection Cards. Providing the member/employee a card containing his or her name and other pertinent information can increase the inspector's professionalism. The reverse side of the card can be used for additional information useful to the member/employee. For example, short moving day tips or reminders of vital actions to be taken by the member/employee. Local reproduction of the card is authorized.

7. Directives. The following directives pertain to the duties of the quality control inspector of personal property and should be readily available.

a. Department of Defense 4500.9-R, Part IV, Defense Transportation Regulation (DTR) Personal Property.

b. Service regulations.

c. Rate solicitations.

E. Preparing for the Inspection.

1. Before any inspection, the inspector must determine the property location, the carrier or contractor performing the services, the type of shipment, and the pack and pickup date and time.

2. Calling the carrier agent's dispatcher for an estimate of the pickup or delivery time will ensure that someone is at the residence when it is essential.

3. When the jobs assigned exceed capability, the inspector must decide which jobs will not be inspected. These jobs must be the ones that are the least urgent or involve the most time and expense.

F. Conduct of the Inspector.

1. The Inspector Must Always be Tactful. Laws, rules of regulatory bodies, and economics define carrier services. If the demands of a member/employee exceed the service agreed to by the carrier and the Government, the inspector must support the carrier and counsel the member/employee. Carrier representatives that are inefficient or unfamiliar with contractual requirements will require counseling by the inspector. This is especially important during summer months when the local agent may be using summer hires.

2. Service to Members/Employees. Maximum service to the member/employee must always be uppermost in the mind of the inspector. However, the entitlements established by law and the regulations of the military department concerned cannot be exceeded.

3. Personal Characteristics.

a. Carrier Personnel. Each assignment presents a different scene with new people and unusual items to move. After a short while on the job, the carrier personnel, particularly crew leaders, become well known. While the inspector must maintain a distance to assure a professional relationship, this gives the inspector an advantage, if properly pursued. The quality of service provided by the crew on previous jobs reveals their strengths and weaknesses and the attitude of carrier personnel toward the consumer, particularly a complaining one, can be predicted. This situation must be handled carefully by the inspector to avoid giving the impression that the carrier and government representatives are collaborating against the customer; that is, "two on one."

b. Members/Employees. Members/employees who are absent on moving day, leaving a spouse who did not attend the counseling session to release the property, must be treated as a potential problem. Members/employees and spouses who disagree or are entertaining friends on pack or pickup days are prone to disagree with the carrier when requested to sign the inventory.

Distinguishing traits of character ranging from over concern to disinterest must be recognized early and met with serious counseling if the carrier, the Government, and the member/employee are to be adequately served. Members/employees should arrange to have small children and pets at a different location on moving day to enhance the packout.

c. Appearance. Inspectors arriving on an assignment should look like an inspector and wear a name plate/badge. Inspectors should also carry a laminated picture identification signed by a well-known installation authority for presentation. A military uniform is not always enough to convince dependents that the inspector should be admitted into their quarters. Also, an inspector card will add the professional touch. Sometimes all the obstacles of a door-to-door salesman must be overcome. A civilian inspector should be neatly attired. Contact with carrier personnel on the way in should be confined to greetings.

d. How to Proceed. Ascertain from the member/employee, away from carrier personnel, what is expected that is not being received and treatment of which possessions is causing anxiety. Services that are denied by entitlement limitation or departmental policy can be resolved by skilled recounseling. Those that involve the service of the carrier that appear to be controversial must be discussed with the crew leader out of earshot of the crew and the member/employee. If results of such conversations are positive, everyone can then discuss the matter and come to an understanding.

(1) Inability to resolve the difference may result in an immediate elevation of the problem to the TO by either the member/employee or the carrier. When this is imminent, the inspector will relay all the facts and conditions to his/her supervisor and make the proper written report.

(2) The most difficult problems for the inspector result from decisions that are based on his/her judgment. Refusal to crate a grandfather clock or a declared high-value antique, denying extra wrapping of furniture items, or information that damages preexisted are unpopular decisions. The inspector must make these decisions to protect the Government.

(3) The inspector, however, must be accurate when making reports. The practice of not reporting deficiencies corrected on the spot breeds repetition and defeats the Quality Control Program. Carrier deficiencies are an indication of inadequate training, equipment, supplies, or attitude that must be recorded to enable correction.

e. Establishing Communications. Sometimes the carrier has not arrived to pack or pickup when the inspector arrives and the member/employee is anxious. Well-organized TOs have a customer service procedure that allows the inspector to report these conditions and get communications established between the carrier and the member/employee, if telephones are available. This relieves the inspector for the next assignment. (If telephones are not available in the immediate vicinity and the member/employee is immobile, contact the carrier and report back to the member/employee and try to answer all questions). Sometimes the shipment has been picked up when the inspector arrives and the member/employee has a problem. Copies of customer reports can be provided with counseling for reporting to the destination transportation office.

G. Post-inspection Reporting.

1. Credits for Completing an Inspection. Regardless of the number of times a shipment may be visited during a pack and pickup or delivery, credit for the inspection must be limited to one. Recording each visit as an inspection will result in more inspections than shipments available to inspect. Any effort that results in contact with the member/employee (or carrier) on which time or resources were expended in collecting sufficient information to make a report can be counted as an inspection subject to the above. Credit for the inspection will be taken on the pickup/delivery date.

2. Telephone Reporting. A call to the inspector's supervisor at the completion of each inspection, if a toll-free telephone is available, will make it possible to revise priorities and provide for inspection of direct inbound deliveries. This call also makes it possible to establish contact at the next job. Inspectors with pocket pagers, however, are always in contact for rearranging priorities.

H. Inspection Goal.

1. Monthly, the TO goal for inspection will be 50 percent of household goods, unaccompanied baggage, mobile homes, non-temporary storage, and local drayage shipments by type. Inspection quality will not be sacrificed to meet this goal.

CLAIM FOR REIMBURSEMENT FOR EXPENDITURES ON OFFICIAL BUSINESS

1. DEPARTMENT OR ESTABLISHMENT, BUREAU, DIVISION OR OFFICE

2. VOUCHER NUMBER

3. SCHEDULE NUMBER

Read the Privacy Act Statement on the back of this form.

5. PAID BY

4. CLAIMANT

a. NAME *(Last, first, middle initial)*

b. SOCIAL SECURITY NUMBER

c. MAILING ADDRESS *(Include ZIP Code)*

d. OFFICE TELEPHONE NUMBER

6. EXPENDITURES *(If fare claimed in col. (g) exceeds charge for one person, show in col. (h) the number of additional persons which accompanied the claimant.)*

Show appropriate code in col. (b):
A - Local travel
B - Telephone or telegraph, or
C - Other Expenses *(itemized)*

(Explain expenditures in specific detail.)

DATE 19 (a)	CODE (b)	(c) FROM	(d) TO	MILEAGE RATE ¢ / NO. OF MILES (e)	AMOUNT CLAIMED: MILEAGE (f)	FARE OR TOLL (g)	ADD. PERSONS (h)	TIPS AND MISCELLANEOUS (i)
If additional space is required continue on the back.			SUBTOTALS CARRIED FORWARD FROM THE BACK					
7. AMOUNT CLAIMED *(Total of cols (f), (g) and (i).)* ▶ $				TOTALS				

8. This claim is approved. Long distance telephone calls, if shown, are certified as necessary in the interest of the Government. *(Note: If long distance calls are included, the approving official must have been authorized, in writing, by the head of the department or agency to so certify (31 U.S.C. 680a).)*

Sign Original Only

APPROVING OFFICIAL SIGN HERE ▶ DATE

9. This claim is certified correct and proper for payment.

Sign Original Only

AUTHORIZED CERTIFYING OFFICER SIGN HERE ▶ DATE

10. I certify that this claim is true and correct to the best of my knowledge and belief and that payment or credit has not been received by me.

PAYMENT DESIRED ☐ CHECK ☐ CASH

Sign Original Only

CLAIMANT SIGN HERE ▶ DATE

11. CASH PAYMENT RECEIPT

a. PAYEE *(Signature)*

b. DATE

c. AMOUNT $

12. PAYMENT MADE BY CHECK NO.

ACCOUNTING CLASSIFICATION

STANDARD FORM 1164 (REV. 11-77)
Prescribed by GSA, FPMR (CFR 41) 101-7

Figure P-1. Form 1164, Claim for Reimbursement for Expenditures on Official Business

6. EXPENDITURES - *Continued*

Show appropriate code in col. (b):
A - Local travel
B - Telephone or telegraph, or
C - Other Expenses *(itemized)*

DATE 19 (a)	CODE (b)	*(Explain expenditures in specific detail.)* (c) FROM	(d) TO	MILEAGE RATE ¢ / NO. OF MILES (e)	AMOUNT CLAIMED: MILEAGE (f)	FARE OR TOLL (g)	ADD. PERSONS (h)	TIPS AND MISCELLANEOUS (i)
Total each column and enter on the front, subtotal line ▶								

In compliance with the Privacy Act of 1974, the following information is provided: Solicitation of the information on this form is authorized by 5 U.S.C. Chapter 57 as implemented by the Federal Travel Regulations (FPMR 101-7), E.O. 11609 of July 22, 1971, E.O. 11012 of March 27, 1962, E.O. 9397 of November 22, 1943, and 26 U.S.C. 601(b) and 6109. The primary purpose of the requested information is to determine payment or reimbursement to eligible individuals for allowable travel and/or other expenses incurred under appropriate administrative authorization and to record and maintain costs of such reimbursements to the Government. The information will be used by Federal agency officers and employees who have a need for the information in the performance of their official duties. The information may be disclosed to appropriate Federal, State, local, or foreign agencies, when relevant to civil, criminal, or regulatory investigations or prosecutions, or when pursuant to a requirement by this agency in connection with the hiring or firing of an employee, the issuance of a security clearance, or investigations of the performance of official duty while in Government service. Your Social Security Account Number (SSN) is solicited under the authority of the Internal Revenue Code (26 U.S.C. 6011(b) and 6109) and E.O. 9397, November 22, 1943, for use as a taxpayer and/or employee identification number; disclosure is MANDATORY on vouchers claiming payment or reimbursement which is, or may be, taxable income. Disclosure of your SSN and other requested information is voluntary in all other instances; however, failure to provide the information (other than SSN) required to support the claim may result in delay or loss of reimbursement.

STANDARD FORM1164 (REV. 11-77) **BACK**

Figure P-1. Form 1164 (Back), Claim for Reimbursement for Expenditures on Official Business

THIS PAGE INTENTIONALLY LEFT BLANK

APPENDIX Q

TRANSPORTATION MANAGEMENT ADVISORY MESSAGES (TMAs)

TMAs will be provided to each Transportation Office by Headquarters Military Traffic Management Command/Personal Property Division (MTPP-H), and upon receipt TMAs should be filed in this Appendix.

THIS PAGE INTENTIONALLY LEFT BLANK

APPENDIX R

DEPARTMENT OF DEFENSE STANDARD TRANSIT TIMES GUIDE – LESS TRUCKLOAD

DOD STANDARD TRANSIT TIME GUIDE - LESS TRUCKLOAD

	AL	AZ	AR	CA	CO	CT	DC	DE	FL	GA	ID	IL	IN	IA	KS	KY	LA	ME	MD	MA	MI	MN	MS	MO	MT	NE	NV	NH	NJ	NM	NY	NC	ND	OH	OK	OR	PA	RI	SC	SD	TN	TX	UT	VT	VA	WA	WV	WI	WY
AL	2																																																
AZ	7	2																																															
AR	4	5	2																																														
CA	7	4	7	3																																													
CO	7	4	4	4	2																																												
CT	5	7	5	9	7	2																																											
DC	4	8	4	9	7	3	2																																										
DE	5	7	5	9	7	3	3	2																																									
FL	4	7	4	9	7	5	4	4	3																																								
GA	3	6	4	7	5	4	4	4	3	2																																							
ID	7	4	7	4	4	8	8	7	8	8	2																																						
IL	4	7	4	7	4	4	4	4	5	4	7	2																																					
IN	4	7	4	7	5	4	4	4	4	4	7	3	2																																				
IA	4	5	4	7	4	6	5	5	7	5	5	3	4	2																																			
KS	4	5	4	5	4	6	6	6	5	5	5	4	4	3	2																																		
KY	3	6	3	7	7	5	4	4	4	3	7	3	3	4	4	2																																	
LA	3	7	3	7	5	6	5	5	4	3	7	4	4	5	4	4	2																																
ME	5	9	7	9	7	3	4	4	4	4	8	5	5	6	5	5	6	2																															
MD	4	8	4	9	7	3	3	3	4	4	8	4	4	5	5	4	5	4	2																														
MA	5	8	6	9	7	3	3	3	5	5	8	4	5	7	5	5	6	3	3	2																													
MI	4	7	4	7	5	4	4	4	5	4	7	3	3	4	4	3	5	4	4	4	2																												
MN	5	6	4	7	4	6	5	5	6	5	7	3	4	3	4	4	5	6	5	6	4	2																											
MS	3	6	3	7	5	6	4	5	4	3	7	3	4	5	4	4	4	6	5	6	5	5	2																										
MO	3	5	3	7	4	5	5	5	5	4	7	3	3	3	3	3	3	5	5	5	4	4	3	2																									
MT	8	5	7	5	4	7	8	7	8	8	4	7	6	6	6	7	7	8	7	8	7	6	7	6	2																								
NE	5	5	3	7	4	5	6	6	7	5	5	4	4	3	3	4	4	5	6	5	4	3	4	3	5	2																							
NV	7	3	6	4	4	8	8	8	7	7	4	7	7	6	5	6	6	8	8	8	7	7	7	6	4	4	2																						
NH	5	8	6	9	7	3	3	3	5	5	8	4	5	6	5	5	6	3	4	3	4	6	6	5	8	6	8	2																					
NJ	5	7	6	9	7	3	3	3	4	4	8	4	4	5	6	4	6	4	3	3	4	5	5	5	8	6	8	3	2																				
NM	5	3	4	5	3	7	7	7	7	5	5	4	5	4	4	6	4	7	7	7	6	5	5	4	5	4	4	7	7	2																			
NY	5	8	6	8	7	3	3	3	5	4	7	4	4	5	6	4	6	4	3	3	4	5	5	5	8	5	7	4	3	7	2																		
NC	3	7	4	8	6	4	3	3	4	3	8	4	4	5	5	3	4	4	3	4	4	5	4	4	8	5	7	4	4	6	4	2																	
ND	6	7	5	7	5	6	7	7	7	7	6	5	5	5	5	5	6	8	6	7	5	4	6	5	5	5	6	7	6	6	6	6	2																
OH	4	7	4	7	5	4	3	4	5	4	6	3	3	4	4	3	5	4	3	4	3	4	5	4	7	4	7	4	4	5	4	4	6	2															
OK	4	4	3	5	3	6	6	6	7	4	5	4	4	4	3	4	3	7	5	6	4	4	4	3	6	3	5	6	5	3	6	5	5	4	2														
OR	8	5	6	4	4	9	9	9	9	8	4	7	7	7	6	8	8	9	9	9	8	6	8	6	4	5	4	9	9	6	9	9	6	8	6	2													
PA	5	7	5	7	7	3	3	3	5	4	7	4	4	5	6	4	5	4	3	3	4	5	5	4	7	5	7	3	3	7	3	3	6	3	5	7	2												
RI	5	9	6	8	7	3	3	3	5	4	8	4	4	5	6	4	6	3	3	3	4	6	5	5	8	5	7	3	3	7	3	4	7	4	6	8	3	2											
SC	3	7	4	7	6	4	3	3	3	3	8	4	4	5	5	3	4	4	3	4	4	5	4	4	8	5	7	4	4	6	4	3	6	4	5	9	4	4	2										
SD	5	7	6	7	5	6	6	6	7	7	5	5	5	4	4	5	6	7	6	7	5	4	8	5	5	4	6	7	6	6	6	6	4	5	5	6	6	7	6	2									
TN	3	6	3	7	5	4	4	4	4	3	7	4	3	4	4	3	3	5	4	5	4	4	3	3	7	5	6	5	4	5	4	3	5	4	4	7	4	5	3	5	2								
TX	4	4	3	5	4	6	6	6	5	4	7	4	4	4	3	4	3	7	6	7	5	5	4	4	6	4	5	7	6	3	6	5	5	5	3	7	6	7	5	5	4	3							
UT	7	3	6	4	3	7	7	7	7	7	3	5	6	5	4	7	7	8	7	8	5	5	7	5	4	4	3	8	7	3	7	7	5	6	4	4	7	7	7	5	6	5	2						
VT	4	8	5	9	7	3	4	4	5	5	8	5	4	6	5	5	6	3	4	3	4	5	6	5	8	5	8	3	3	7	3	5	7	4	6	9	3	3	4	7	5	7	7	2					
VA	4	7	5	9	7	3	3	3	4	4	8	4	4	5	5	3	5	4	3	3	4	5	4	4	8	6	8	4	3	7	3	3	6	3	6	9	3	3	3	6	3	6	7	4	2				
WA	8	4	7	4	5	9	9	9	9	8	4	6	7	7	6	8	8	9	9	9	8	6	8	6	4	7	4	8	9	5	9	9	6	8	6	3	9	9	9	6	8	6	4	9	9	2			
WV	4	7	4	7	7	4	3	3	4	4	7	4	3	4	4	3	5	4	3	4	4	4	4	4	7	5	8	4	3	6	4	3	5	3	5	8	3	4	3	5	3	6	6	4	3	8	2		
WI	4	5	4	7	4	4	4	4	5	4	7	3	3	3	4	4	5	5	4	5	3	3	4	3	6	3	7	5	4	6	4	4	4	4	3	4	7	4	5	4	4	4	5	5	5	4	7	4	2	
WY	6	4	5	4	3	7	7	7	7	6	4	5	6	4	4	6	7	7	7	7	7	4	7	4	4	3	4	7	7	4	7	7	4	6	4	5	7	7	6	5	6	5	3	7	7	5	6	5	2

Figure R-1 DOD Standard Transit Time Guide – Less Truckload

APPENDIX S

BACKGROUND AND TECHNICAL DETAILS FOR 2-DIMENSIONAL (2D) SYMBOLOGY ON THE PERSONAL PROPERTY MILITARY SHIPPING LABEL (MSL)

A. Transportation Processing.

1. Advanced Transportation Control and Movement Document (ATCMD) is Available. The MSL 2D symbol improves the accuracy of transportation in-check when ATCMD data is available in the automated information system (AIS) being used to process the cargo.

a. When the ATCMD data is available in the AIS, three TCMD bar code data points are used from the MSL 2D symbol of each shipment unit to complete the in-check: the TCN of the shipment unit, the piece number, and the consignee agents' Department of Defense Activity Address Code.

b. To meet this requirement, the MSL 2D symbol label must contain the American National Standards Institute (ANSI) MH10.8.2 Data Identifiers (DI) and related data that are mapped to the source document header TCMD prime data.

2. ATCMD is Not Available. When ATCMD data are not available, the 2D symbol is also intended to improve the speed and accuracy of transportation in-check by the processing activity. The MSL 2D symbol is intended to provide selected TCMD data to resolve a "no-hit" situation that occurs during shipment in-check when ATCMD prime and/or trailer data are not available.

3. Reprint MSL. The 2D symbol can also serve as a data file to assist in reprinting a label that has been damaged or for printing a new label when information changes. In addition to the TCMD information, the MSL 2D symbol must also contain pertinent information that is human readable on the MSL.

B. Explanation of MSL 2D PDF417 Symbol Structure for Coding MSL text and TCMD data.

1. Each personal property shipment unit must be marked with a 2D symbol shipping label and the 2D symbol will contain the data elements from the table below. This table provides the content of the data streams for personal property MSLs.

2. All shipment unit data and line item data in the MSL 2D symbol replicate data from the Transportation Operational Personal Property Standard System or from shipment information entered in-the-clear on the MSL.

3. Explanation of Table S-2 columns.

a. Compliance Indicator (Column 1) shows the special formatting characters associated with the ANSI MH10.8.3 data format. The Compliance Indicator will be the first three characters in the Message Header. The Compliance Indicator will be [)> (left bracket, right parenthesis, and greater than).

b. Format Codes “06” and “07” (Columns 2 through 4) consist of a Format Header (a two-digit numeric identifier which identifies the rules governing the format), and variable MSL 2D symbol header format DI or Data Element Identifiers (DEI), respectively, which define the separators used and control information of the standards.

c. Data Field (Column 5) contains the description of the data field.

d. Data Format Type/Length (Columns 6 and 7) contains indicators of whether the data is alpha and/or numeric and the length of the actual data represented by this field, e.g. an5. A convention of “an..35” means a variable length data string of up to 35 alphanumeric characters, where “an17” means a fixed length of precisely 17 alphanumeric characters. The “+” sign may also be used to concatenate data fields within a DI string. Variable length fields are not zero-filled unless specified.

e. Sample Data (Column 8) contains sample data for the field indicated.

f. Element Separators (Column 9) shows the separator or terminal code for that particular part of the data stream. The Format Trailer Character ($^{R}_{S}$) will be used as the fourth character in the Message Header and at the end of each format series of data. The Data Element Separator ($^{G}_{S}$) separates data elements within each format series of the data table. The Message Trailer ($^{E}O_{T}$) identifies the end of the message within the data stream.

Table S-1: Excerpt from “Subset of ASCII/ISO 646

(Table of Hexadecimal and Decimal Values)

ASCII / ISO 646	HEX	DEC
$^{R}_{S}$	1E	30
$^{G}_{S}$	1D	29
$^{E}O_{T}$	04	04

g. Total Characters (Column 10) shows the total number of characters including compliance characters, format indicators, data elements and termination/separator characters for a particular data segment.

C. PDF417 Symbol Format Compliance Requirements as Referenced in ANSI MH10.8.1 and MH10.8.3

1. The narrow element dimension (“X” dimension) range will be from 0.010 to 0.017 inches (10 to 17 mils).

2. The minimum bar height of an element will be three times the “X” dimension width.

3. The symbol will fit within a double high building block of 2.0 inches ± 0.4 inches as described in ANSI MH10.8.1.

4. The symbol will be printed with no more than 12 data columns in width. A PDF417 symbol includes a start pattern, a left row indicator column, one or more data columns, a right row indicator column, and a stop pattern. The start and stop patterns appear to be wide and narrow vertical lines on each end. The indicator and data columns appear to be checkered patterns separated by single vertical lines.

5. The symbol will have a minimum quiet zone of 0.04 inches above, below, to the left, and to the right.

6. An error correction level of 5 will be used.

7. ISO/IEC 15438 Automatic Identification and Data Capture Techniques - International 2D Symbology Specification - PDF417 and ISO 15416 will be used to determine a minimum symbol print grade of 2.5/10/660, where:

a. Print quality grade ≥ 2.5 (B) at point of printing.

b. Measurement aperture = 0.010 inches.

c. Light source wavelength = 660 nanometers (nm) ± 10 nm.

Table S-2. Personal Property Shipping Label 2D Symbol Format

Personal Property Shipping Label 2D Symbol Format									
Compliance Indicator	**Format Header**	**Format 06 DI**	**Format 07 DEI**	**Data Field**	**Data Format Type / Length DI | Data**		**Sample Data without DI/DEI**	**Element Separators**	**Total Characters**
[)>				**Message Header Compliance Indicator**	**an3**		**[)>**	**RS**	**4**
	06			**Data Identifier Format Header**	**an2**		**06**	**GS**	**3**
		JKUSM		TCN	an5	an17	SW31238013E221XXX	GS	23
		3D		Ship Date	an2	an4	8077	GS	7
		2K		Bill of Lading	an2	an..12	M1234567	GS	15
		2L		Ship To Address	an2	an..35+ an..35+ an..35+ an..35+ an..35	1st address line+2nd address line+3rd address line+4th address line	GS	178
		3L		Ship From Address	an2	an..35+ an..35+ an..35	1st address line+2nd address line+3rd address line	GS	108
		5L		Ship For Address	an2	an..35+ an..35+ an..35+ an..35+ an..35	1st address line+2nd address line+3rd address line+4th address line	GS	178
		9K		TAC	an2	an4	F8WR	GS	7
		12K		SCAC	an3	an4	AERM	GS	8
		2Q		Weight	an2	an..5 +../an2	3870	GS	11
		11Q		Tare Weight	an3	an..5		GS	9
		13Q		Piece Number/Total Pieces	an3	an..4/an..4	1/4	RS	13
	07			**Free Text Format Header**	**an2**		**07**	**GS**	**3**
			12	Cube	an2	an..4 +../an2	35	GS	10
			15	Water Commodity/Special Handling Code	an2	an5	390Z9	GS	8
			23	Air Dimension Code	an2	an1	A	GS	4
			25	POE	an2	an3	JF6	GS	6
			26	POD	an2	an3	1N4	GS	6

Table S-2. Personal Property Shipping Label 2D Symbol Format

Personal Property Shipping Label 2D Symbol Format									
Compliance Indicator	**Format Header**	**Format 06 DI**	**Format 07 DEI**	**Data Field**	**Data Format Type / Length DI | Data**		**Sample Data without DI/DEI**	**Element Separators**	**Total Characters**
			27	Consignee	an2	an6	AF5612	GS	9
			28	Transportation Priority	an2	n1	1	GS	4
			29	Consignor	an2	an6	W62N2A	GS	9
			30	Mode/Method Code	an2	an1	A	GS	4
			32	RDD	an2	n3	834	GS	6
			34	TCMD Doc ID Code (header DIC only)	an2	an3	TX1	GS	6
			35	Free Text	an2	an..60	Free text up to 60 characters	GS	63
			45	Owner's Last Name	an2	an..13	Smith	GS	16
			46	Owner's First and Middle Initial	an2	an..2	IM	GS	5
			47	Owner's Grade	an2	an2	GB	GS	5
			48	Type Service	an2	an..10	TGBL Cd J	GS	13
			49	Air Commodity/Special Handling Code	an2	an2	AZ	GS	5
			50	Type Pack Code	an2	an2	BX	GS	5
			69	Personal Property Code	an2	an1	B	GS	4
			70	Net Weight of Shipment	an2	an..5	12000	GS	8
			71	POV Year and Model	an2	n2+an..4	02SABL	GS	9
			72	POV Make	an2	a4	MERC	GS	7
			73	POV State of Registration	an2	a2	VA	GS	5
			74	POV License Number	an2	an8	PAE8393X	GS	11
			75	POV Vehicle Color	an2	a3	BLK	RSEOT	7

Data entries for listed DIs/DEIs are mandatory if: 1) The text is shown on the MSL for a respective DI/DEI; 2) The data is available for the shipment unit's TCMD; 3) The data is available from the supply line item documentation for the cargo in the shipment unit. Blank data entries are not required to be in the 2D symbol.

THIS PAGE INTENTIONALLY LEFT BLANK